BOSCH GUIDE SPECIFICATIONS

TA Split Series Two Stage R-410A

GENERAL

Units shall be performance certified to ISO standard 13256-1 for Water Loop Heat Pump, Ground Water Heat Pump and Ground Loop Heat Pump applications. Units shall be Underwriter Laboratories (UL and ULc) listed for safety on all models. Each unit shall be run tested at the factory. Each unit shall be pallet mounted, stretch wrapped and covered with carboard. The units shall be manufactured in an ISO9001:2000 certified facility. Refer to Bosch limited product warranty for details on warranty coverage.

The units Shall be designed to operate with entering fluid temperatures between 50˚F (10˚C) and 110˚F (43.3˚C) in cooling and temperatures between 25˚F (-3.9˚C) and 80˚F (26.6˚C) in heating as manufactured by Bosch Manufacturing in Fort Lauderdale, Florida.

CASING & CABINET

The cabinets shall be fabricated from heavy-gauge steel finished with a vinyl coated black cabinet and a silver brushed aluminum front panel.

Air Handler: The interior shall be insulated with ½" (12.7mm) thick foil faced glass fiber, with 1" (25.4 mm) foil faced glass fiber insulation in the air handler. Two blower compartment access panels shall be removable with supply and return ductwork in place. A duct collar shall be provided on the supply air opening. A filter rack with a 2" (50.8 mm) thick disposable filters and a 1" (25.4mm) return air duct collar shall be provided with each unit. Air filters shall be pleated, with a MERV 11 rating. Units shall have a stainless steel condensate drain pans with a condensate overflow sensor.

Condensing Section: All unit installations shall allow sufficient service access to replace the compressor without unit removal. The compressor shall have a floating base pan to minimize noise transmissions. Each unit also comes standard with a heavy duty, multi-density compressor blanket for exceptional noise containment and as a thermal insulator for wires and components surrounding the compressor.

REFRIGERATION CIRCUITS

All units shall contain a sealed refrigerant circuit including a two stage scroll compressor, two internal checking thermal expansion valve metering devices in the air handler and one in the condensing section, finned tube air-to-refrigerant heat exchanger, refrigerant reversing valve, refrigerant service shut off valves, and service ports. Compressor shall be high efficiency two stage scroll type, designed for heat pump duty, quiet operation and mounted on rubber vibration isolators. Compressor motors shall be equipped with overload protection. Refrigerant reversing valves shall be pilot operated sliding piston type with replaceable encapsulated magnetic coils energized only during the cooling cycle. The finned tube coil shall be constructed of lanced aluminum fins not exceeding fourteen fins per inch bonded to rifled copper tubes in a staggered pattern not less than three rows deep and have a 600 PSIG (4140 kPa) working pressure. Coils shall have a baked polyester enamel coating for protection against most airborne chemicals. Coil end plates shall be aluminum. The coaxial water-to-refrigerant heat exchanger shall be constructed of a convoluted copper (optional cupronickel) inner tube and steel outer tube with a designed refrigerant working pressure of 600 PSIG (4140 kPa) and a designed water side working pressure of no less than 400 PSIG (2750 kPa). The water-to-refrigerant heat exchanger and all refrigerant piping shall be insulated with closed-cell polyvinyl chloride foam to prevent condensation at low fluid temperatures.

FAN MOTOR & ASSEMBLY

The fan shall be direct drive centrifugal forward curved type with a dynamically balanced wheel. The housing and wheel shall be designed for quiet low velocity operation. The fan housing shall be removable from the unit without disconnecting the supply air ductwork for servicing of the fan motor.The fan motor shall be an ECM-2.3 microprocessor controlled DC type motor with internal programming factory set for the specific unit and featuring soft start/stop and a delay off feature for maximum efficiency and quiet operation. Air flow rates shall be varied according to the staging of the unit. There will further be provisions for adjusting the air delivery of the motor and blower by +/- 15% from rated air flow.

ELECTRICAL

Controls and safety devices will be factory wired and mounted within the unit. Controls shall include comfort alert module, compressor contactor, 24V transformer, reversing valve coil and solid state lock-out controller (UPM). The UPM controller shall include the following features: diagnostic LED's, low pressure bypass time delay (to prevent nuisance low pressure lock-outs during operation with low fluid temperatures), anti short cycle time delay, random start time delay and one time intelligent reset. When the safety controls are activated the lock-out circuit shall reset itself the first time. If the safety controls are subsequently activated within one hour, then the lock-out circuit shall disable the compressor until it is reset at the thermostat or main circuit breaker to prevent compressor operation during fault conditions. A lock-out indicating terminal shall be provided in the low voltage circuit. Safety devices include a low pressure cutout set a 40 PSIG (280 kPa) for loss of charge protection (freezestat and/or high discharge gas temperature sensor is not acceptable) and a high pressure cutout control set at 600 PSIG (4140 Kpa).

The ECM motor interface board shall provide a screw type terminal block for thermostat connection, LED's to indicate thermostat status and air delivery. It shall also provide a means of changing the motor program to any of up to four pre-programmed options. Direct wiring of the motor control harness to the thermostat is not acceptable.

A terminal block with screw terminals shall be provided for control wiring. A standard condensate overflow device shall be factory installed to stop compressor operation if drain pan overflow is imminent. An optional energy management relay to allow unit control by an external source can be factory installed.

PIPING

Supply, return water and condensate drain connections shall be brass female pipe thread fittings and mounted flush to cabinet exterior.

INTERNAL ELECTRIC HEAT (Optional)

208/230-1-60 volt units shall be equipped with optional internal electric resistance heat for auxiliary and emergency heat. Electric heater must be Underwriter's Laboratories (UL and cUL) approved for safety when installed in the unit. External heater packages or heater packages not specifically listed for use with the unit are unacceptable. Electric heater packages shall include a heater collar mounted to the blower outlet, individual thermal overload protected heater elements no greater than 5kW each and magnetic contactors. An empty heater collar is standard in all units. Heating elements are available as an after sale product and can be added at any time if purchased without this option.

HEAT RECOVERY PACKAGE (Optional)

208/230-1-60 volt units shall be equipped with an optional factory installed internal heat recovery kit for domestic hot water production. This kit shall include an internally protected pump, double walled coaxial water-to-refrigerant heat exchanger, 140˚F (60˚C) hot water temperature limit switch and an on/off switch/circuit breaker.

Physical Data

Unit Size	TA025	TA035	TA049	TA061	TA071
Compressor Type	Two Stage Scroll				
Quantity	1	1	1	1	1
*Refrigerant Charge oz.	88	93	115	150	160
Coil Face Area Ft^2	3.5	4.5	6	7.5	7.5
Rows	3	3	3	3	3
Filter Size HZ (Qty) Ins.	16 x 20 x 2 (2)	18 x x20 x 2 (2)	20 x 24 x 2 (2)	20 x 28 x 2 (2)	20 x 28 x 2 (2)
Filter Size VT (Qty) Ins.	24 x 24 x 2 (1)	24 x 30 x 2 (2)	16 x 30 x 2 (2)	20 x 30 x 2 (2)	20 x 30 x 2 (2)
Standard Filter Rating	MERV 11				
Blower Size ins.	9 x 7	9 x 7	10 x 8	11 x 9	12 x 9
ECM Motor HP	1/3	1/2	3/4	3/4	1.0
Quantity	1	1	1	1	1
Water Connections ins. FPT	3/4	1.0	1.0	1.0	1.0
Condensate Connection Ins. FPT	3/4	3/4	3/4	3/4	3/4
Suction Line Size Ins	3/4	3/4	3/4	7/8	7/8
Liquid Line Size Ins.	3/8	3/8	3/8	3/8	3/8
Condensing Unit Ship Weight Lbs.	204	279	292	340	364
Condensing Unit Operating Weight Lbs	179	253	266	313	340
Air Handling Unit Ship Weight Lbs.	174	218	204	294	294
Air Handling Unit Operating Weight Lbs	148	181	152	242	242

*Refrigerant charge shipped in condensing section

Certified Performance Data

MODEL	Full/ Part Load	Fluid Flow Rate	ARI/ISO 13256-1 PERFORMANCE DATA											
			ENTERING WATER TEMPERATURES											
			86˚F		68˚F		59˚F		50˚F		77˚F		32˚F	
			Water Loop				Ground Water				Ground Loop			
			CAPACITY AND EFFICIENCY DATA											
			COOLING CAPACITY (WLHP)	EER (WLHP)	HEATING CAPACITY (WLHP)	COP (WLHP)	COOLING CAPACITY (GWHP)	EER GWHP)	HEATING CAPACITY (GWHP)	COP GWHP)	COOLING CAPACITY (GLHP)	EER (GLHP)	HEATING CAPACITY (GLHP)	COP (GLHP)
TA025	Full Load	8.0	27,000	16.1	32,500	5.2	31,000	25.0	26,500	4.7	28,500	19.1	20,400	4.0
	Part Load	8.0	20,000	19.2	23,000	6.4	22,500	32.4	19,500	5.4	22,000	27.7	16,600	4.6
TA035	Full Load	9.0	36,600	15.9	43,000	5.0	41,200	23.4	36,200	4.6	38,200	18.3	28,200	4.0
	Part Load	9.0	25,700	19.7	29,500	6.2	29,500	33.9	24,300	5.2	28,200	28.4	22,000	4.7
TA049	Full Load	12.0	50,000	16.8	53,000	5.1	56,000	23.9	45,500	4.7	52,000	18.9	38,000	4.0
	Part Load	12.0	37,000	19.9	38,500	5.8	41,200	32.4	31,500	4.9	40,200	27.9	28,000	4.5
TA061	Full Load	14.0	64,000	16.1	78,500	5.3	71,000	23.7	65,000	4.9	67,000	18.4	49,000	4.0
	Part Load	14.0	47,000	18.9	56,500	6.1	53,000	32.9	45,000	5.1	51,000	27.6	39,000	4.5
TA071	Full Load	18.0	72,000	15.9	89,000	5.1	78,000	21.7	73,,000	4.6	74,000	17.9	58,000	3.8
	Part Load	18.0	53,000	18.1	65,800	5.1	59,000	28.7	53700	4.5	57,500	25.1	47,000	4.0

Tabulated performance data is at noted entering water temperatures and entering air conditions of 80.6° F DB/66.2°F WB at ARI/ISO 13256-1 rated CFM.

FHP Manufacturing Co.
601 N.W. 65th Court
Fort Lauderdale, FL 33309
Phone: (954) 776-5471
Fax: (800) 776-5529
http://www.bosch-climate.us

TA Two Stage Series
Vertical Air Handler Dimensions

MODEL	A	B	C	D	E	F	G
	Width	Depth	Height	Supply Width	Supply Height	Return Width	Return Height
TA025	22.00	26.25	25.75	13.75	13.75	22.00	22.25
TA035	24.25	33.50	25.75	15.75	15.75	29.00	22.25
TA049	26.25	33.50	33.00	17.75	17.75	28.50	28.50
TA061	26.25	33.50	42.25	17.75	17.75	28.00	38.50
TA071	26.25	33.50	42.25	17.75	17.75	28.00	38.50

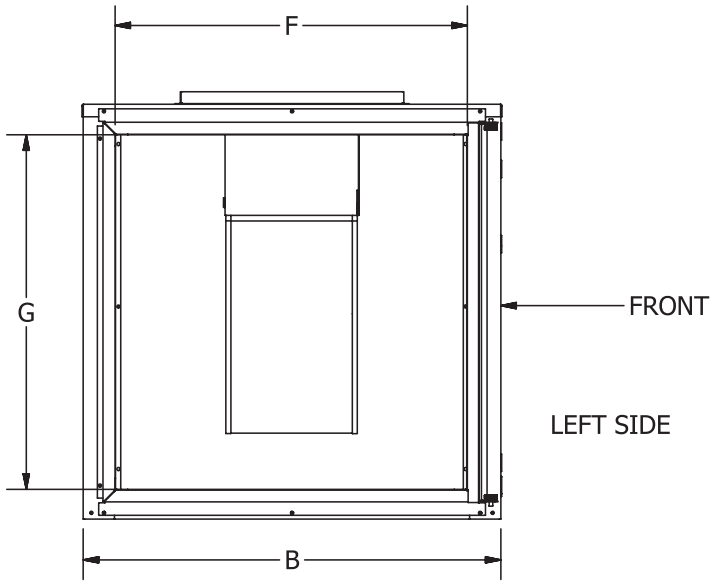

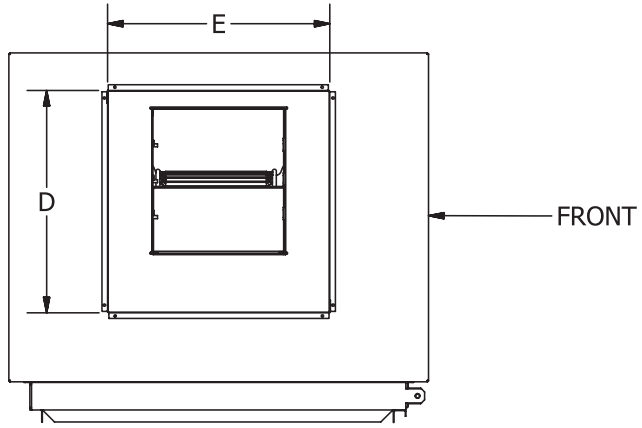

TOP

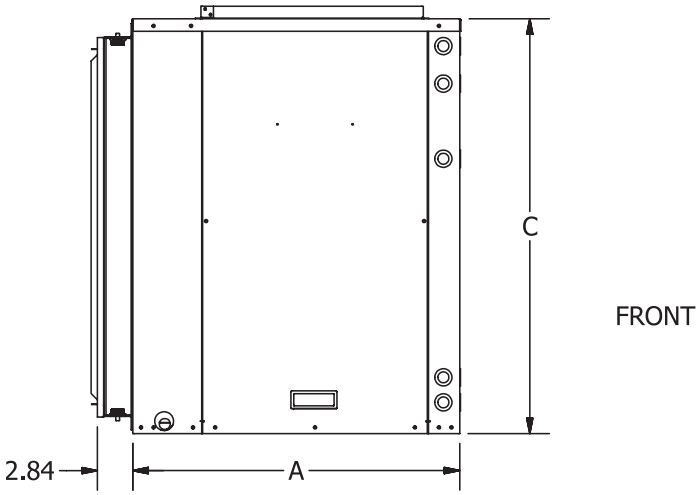

TA SPLIT SYSTEM - VERTICAL AIR HANDLERS

NOTES: All dimensions within +/- 0.125".
All condensate drain connections are 3/4" FPT.
Internal electric heat available on 208-230/1/60 top discharge units only
Specifications subject to change without notice.

FHP Manufacturing Co.
601 N.W. 65th Court
Fort Lauderdale, FL 33309
Phone: (954) 776-5471
Fax: (800) 776-5529
http://www.bosch-climate.us

TA Two Stage Series
Horizontal Air Handler Dimensions

MODEL	A	B	C	D	E	F	G
	Width	Depth	Height	Supply Width	Supply Height	Return Width	Return Height
TA025	26.25	34.75	22.50	13.75	13.75	30.00	18.25
TA035	30.25	39.00	22.50	15.75	15.75	34.00	18.25
TA049	30.25	51.50	22.50	17.75	17.75	46.25	18.25
TA061	33.25	60.25	22.50	17.75	17.75	54.00	18.25
TA071	33.25	60.25	22.50	17.75	17.75	54.00	18.25

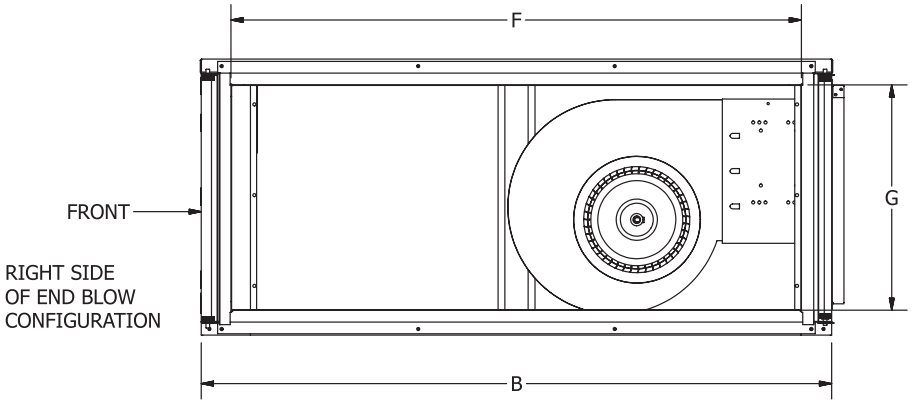

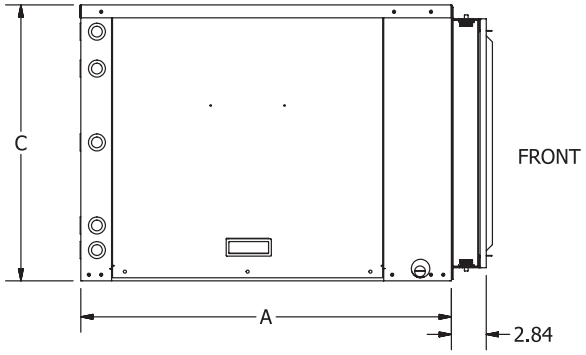

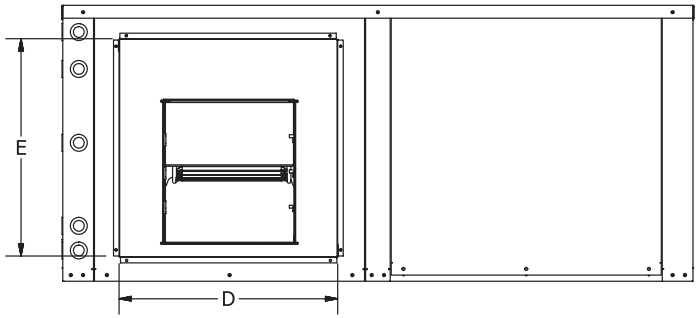

RIGHT SIDE OF STRAIGHT
THROUGH CONFIGURATION

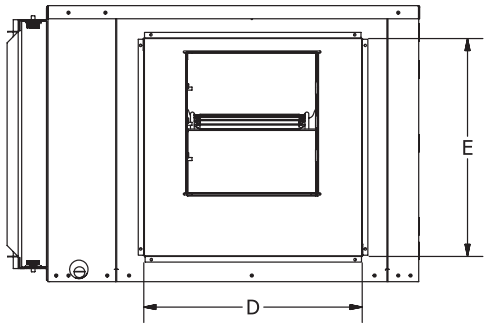

END BLOW CONFIGURATION

NOTES: All dimensions within +/- 0.125".

All condensate drain connections are 3/4" FPT.

Internal electric heat available on 208-230 volt units only

Units can be field converted between end blow and straight through supply air configurations.

Specifications subject to change without notice.

FHP Manufacturing Co.
601 N.W. 65th Court
Fort Lauderdale, FL 33309
Phone: (954) 776-5471
Fax: (800) 776-5529
http://www.bosch-climate.us

TA Two Stage Series Condensing Sections Dimensions

MODEL	A	B	C
	Width	Depth	Height
TA025	30.25	28.25	22.00
TA035	30.25	28.25	22.00
TA049	30.25	28.25	22.00
TA061	30.25	28.25	22.00
TA071	30.25	28.25	22.00

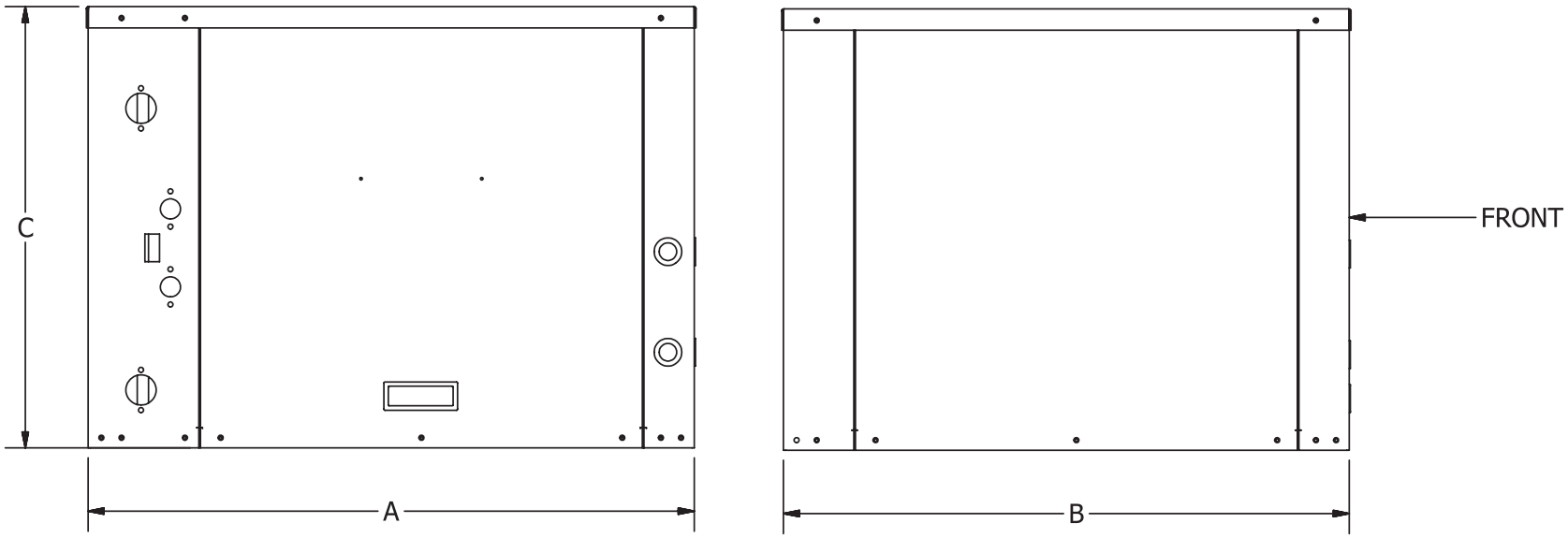

TA SPLIT SYSTEM - CONDENSING SECTION

NOTES: All dimensions within +/- 0.125".
All Heat Recovery Kit connections are 1/2" FPT.
Internal Heat Recovery Kit available on 208-230 volt units only.
Specifications subject to change without notice.

BOSCH SPLIT UNITS TA025-XCSC / TA025-XAHX/AVX
SPECIFICATION DATA SHEET

TA025

CAPACITY DATA - PART LOAD

COOLING All performance at 700 CFM and 8.0 GPM

EFT Range (Standard) 50°F to 100°F

Entering Fluid Temp. (°F)	Entering Air Temp. (°F)	Total Capacity (MBtuH)	Sensible Capapcity (MBtuH)	Sensible to Total Ratio	Power Input (kW)	Heat of Reject (MBtuH)	EER
50°	70°db 61°wb	19.80	12.73	0.64	0.65	22.03	30.4
60°		19.09	12.37	0.65	0.77	21.70	24.9
70°		18.37	12.05	0.66	0.88	21.38	20.9
85°		17.30	11.65	0.67	1.05	20.89	16.4
100°		16.22	11.31	0.70	1.22	20.40	13.3
50°	75°db 63°wb	21.22	15.24	0.72	0.66	23.46	32.4
60°		20.46	14.81	0.72	0.77	23.09	26.6
70°		19.69	14.43	0.73	0.89	22.71	22.2
85°		18.54	13.95	0.75	1.06	22.15	17.5
100°		17.39	13.55	0.78	1.23	21.59	14.1
50°	80°db 67°wb	23.30	16.83	0.72	0.66	25.56	35.3
60°		22.46	16.36	0.73	0.78	25.11	28.9
70°		21.62	15.95	0.74	0.89	24.67	24.2
85°		20.36	15.41	0.76	1.07	24.00	19.1
100°		19.10	14.97	0.78	1.24	23.33	15.4
50°	85°db 71°wb	25.38	18.44	0.73	0.66	27.65	38.2
60°		24.47	17.93	0.73	0.78	27.14	31.3
70°		23.56	17.47	0.74	0.90	26.62	26.2
85°		22.19	16.89	0.76	1.07	25.85	20.7
100°		20.82	16.41	0.79	1.25	25.08	16.7

HEATING **EFT Range (Standard) 25°F to 80°F**

Entering Fluid Temp. (°F)	Entering Air Temp. (°F)	Total Capacity (MBtuH)	Power Input (kW)	Heat of Abs. (MBtuH)	COP
25°	60°	16.01	1.10	12.25	4.3
30°		16.92	1.11	13.15	4.5
40°		18.74	1.11	14.95	4.9
50°		20.98	1.12	17.16	5.5
60°		22.83	1.12	19.00	6.0
70°		24.69	1.13	20.83	6.4
80°		26.55	1.14	22.67	6.8
25°	70°	15.15	1.12	11.32	4.0
30°		16.01	1.12	12.17	4.2
40°		17.73	1.13	13.87	4.6
50°		19.84	1.14	15.96	5.1
60°		21.59	1.14	17.69	5.5
70°		23.35	1.15	19.43	6.0
80°		25.10	1.16	21.16	6.4
25°	80°	14.13	1.15	10.22	3.6
30°		14.93	1.15	11.02	3.8
40°		16.54	1.15	12.60	4.2
50°		18.50	1.16	14.54	4.7
60°		20.14	1.17	16.15	5.1
70°		21.77	1.17	17.77	5.4
80°		23.41	1.18	19.38	5.8

Shaded areas requires Antifreeze

FLUID PRESSURE DROP

Fluid Flow	Press. Drop	
(GPM)	(FOH)	(PSIG)
5.0	2.0	0.9
7.0	3.6	1.6
9.0	5.7	2.5
11.0	8.2	3.5
13.0	11.0	4.8

ARI PERFORMANCE CERTIFIED ANSI/ARI/ASHRAE/ISO Standard 13256-1

c UL us

TA025.1IP60 Rev: 03-12

CAPACITY DATA - FULL LOAD

COOLING All performance at 950 CFM and 8.0 GPM

EFT Range (Standard) 50°F to 100°F

Entering Fluid Temp. (°F)	Entering Air Temp. (°F)	Total Capacity (MBtuH)	Sensible Capapcity (MBtuH)	Sensible to Total Ratio	Power Input (kW)	Heat of Reject (MBtuH)	EER
50°	70°db 61°wb	27.31	18.01	0.66	1.19	31.36	23.0
60°		26.05	17.32	0.67	1.34	30.62	19.5
70°		24.78	16.69	0.67	1.49	29.87	16.6
85°		22.89	15.82	0.69	1.72	28.76	13.3
100°		21.00	15.02	0.72	1.95	27.65	10.8
50°	75°db 63°wb	29.26	21.55	0.74	1.19	33.34	24.5
60°		27.91	20.73	0.74	1.35	32.51	20.7
70°		26.56	19.97	0.75	1.50	31.68	17.7
85°		24.54	18.94	0.77	1.73	30.44	14.2
100°		22.51	17.98	0.80	1.96	29.20	11.5
50°	80°db 67°wb	32.13	23.80	0.74	1.20	36.23	26.7
60°		30.65	22.89	0.75	1.36	35.28	22.6
70°		29.17	22.06	0.76	1.51	34.32	19.3
85°		26.95	20.92	0.78	1.74	32.90	15.5
100°		24.73	19.87	0.80	1.97	31.47	12.5
50°	85°db 71°wb	34.99	26.07	0.75	1.21	39.12	28.9
60°		33.38	25.08	0.75	1.37	38.04	24.4
70°		31.77	24.17	0.76	1.52	36.97	20.9
85°		29.36	22.92	0.78	1.76	35.35	16.7
100°		26.94	21.77	0.81	1.99	33.73	13.5

HEATING **EFT Range (Standard) 25°F to 80°F**

Entering Fluid Temp. (°F)	Entering Air Temp. (°F)	Total Capacity (MBtuH)	Power Input (kW)	Heat of Abs. (MBtuH)	COP
25°	60°	18.99	1.46	14.01	3.8
30°		20.72	1.51	15.56	4.0
40°		24.16	1.61	18.66	4.4
50°		28.16	1.71	22.32	4.8
60°		31.67	1.81	25.49	5.1
70°		35.18	1.91	28.66	5.4
80°		38.70	2.01	31.83	5.6
25°	70°	17.97	1.48	12.90	3.5
30°		19.60	1.54	14.35	3.7
40°		22.85	1.64	17.26	4.1
50°		26.63	1.74	20.69	4.5
60°		29.95	1.84	23.66	4.8
70°		33.27	1.95	26.63	5.0
80°		36.59	2.05	29.60	5.2
25°	80°	16.77	1.52	11.59	3.2
30°		18.28	1.57	12.93	3.4
40°		21.31	1.67	15.60	3.7
50°		24.83	1.78	18.76	4.1
60°		27.92	1.88	21.50	4.3
70°		31.02	1.99	24.23	4.6
80°		34.11	2.09	26.97	4.8

Shaded areas requires Antifreeze

Condensing units contain compressor, reversing valve, expansion valve metering device, and water to refrigerant heat exchangers. Also included are safety controls: Overload protection for compressors, high and low refrigerant pressure switches, solid state lock-out circuit and optional UL approved internal Heat Recovery Package. Air handlers contain refrigerant to air heat exchanger, expansion valve metering device, ECM fan motor and blower. Optional factory installed UL approved internal electric heat with overload protection and magnetic contactors (208/230-1-60 only) and/or Ground Loop Pump with purge connections available. Performance based on ARI/ISO rated air flow, fluid flow and voltage. For conditions other than rated, consult the Bosch EAD selection software. Due to variations in installation actual performance may vary marginally from tabulated values.

FHP Manufacturing Co.
601 N.W. 65th Court
Fort Lauderdale, FL 33309
Phone: (954) 776-5471
Fax: (800) 776-5529
http://www.bosch-climate.us

TA025.2IP60 Rev: 03-12

BOSCH SPLIT UNITS TA035-XCSC / TA035-XAHX/AVX
SPECIFICATION DATA SHEET

TA035

CAPACITY DATA - PART LOAD

COOLING All performance at 1000 CFM and 9.0 GPM

EFT Range (Standard) 50°F to 100°F

Entering Fluid Temp. (°F)	Entering Air Temp. (°F)	Total Capacity (MBtuH)	Sensible Capapcity (MBtuH)	Sensible to Total Ratio	Power Input (kW)	Heat of Reject (MBtuH)	EER
50°	70°db 61°wb	26.07	16.75	0.64	0.81	28.82	32.3
60°		24.94	16.16	0.65	0.95	28.18	26.3
70°		23.82	15.62	0.66	1.09	27.55	21.8
85°		22.13	14.90	0.67	1.31	26.59	16.9
100°		20.44	14.24	0.70	1.52	25.64	13.4
50°	75°db 63°wb	27.94	20.05	0.72	0.81	30.71	34.4
60°		26.74	19.35	0.72	0.95	29.99	28.0
70°		25.53	18.71	0.73	1.10	29.28	23.2
85°		23.73	17.85	0.75	1.31	28.21	18.1
100°		21.92	17.07	0.78	1.53	27.14	14.3
50°	80°db 67°wb	30.68	22.15	0.72	0.82	33.46	37.6
60°		29.36	21.38	0.73	0.96	32.64	30.5
70°		28.04	20.67	0.74	1.11	31.81	25.3
85°		26.06	19.72	0.76	1.32	30.58	19.7
100°		24.08	18.86	0.78	1.54	29.34	15.6
50°	85°db 71°wb	33.42	24.28	0.73	0.82	36.22	40.6
60°		31.98	23.43	0.73	0.97	35.29	33.0
70°		30.55	22.65	0.74	1.11	34.35	27.4
85°		28.39	21.61	0.76	1.33	32.94	21.3
100°		26.24	20.67	0.79	1.55	31.54	16.9

HEATING **EFT Range (Standard) 25°F to 80°F**

Entering Fluid Temp. (°F)	Entering Air Temp. (°F)	Total Capacity (MBtuH)	Power Input (kW)	Heat of Abs. (MBtuH)	COP
25°	60°	21.06	1.40	16.27	4.4
30°		22.13	1.41	17.31	4.6
40°		24.26	1.43	19.39	5.0
50°		26.93	1.44	22.01	5.5
60°		29.10	1.46	24.13	5.9
70°		31.28	1.47	26.26	6.2
80°		33.46	1.49	28.38	6.6
25°	70°	19.93	1.43	15.05	4.1
30°		20.93	1.44	16.03	4.3
40°		22.95	1.45	18.00	4.6
50°		25.47	1.47	20.46	5.1
60°		27.52	1.48	22.47	5.4
70°		29.58	1.50	24.47	5.8
80°		31.64	1.51	26.48	6.1
25°	80°	18.59	1.46	13.62	3.7
30°		19.53	1.47	14.53	3.9
40°		21.41	1.48	16.35	4.2
50°		23.75	1.50	18.64	4.6
60°		25.67	1.51	20.51	5.0
70°		27.59	1.53	22.37	5.3
80°		29.50	1.54	24.23	5.6

Shaded areas requires Antifreeze

FLUID PRESSURE DROP

Fluid Flow	Press. Drop	
(GPM)	(FOH)	(PSIG)
5.0	2.0	0.9
7.0	3.6	1.6
9.0	5.7	2.5
11.0	8.2	3.5
13.0	11.1	4.8

ARI PERFORMANCE CERTIFIED ANSI/ARI/ASHRAE/ISO Standard 13256-1

c UL us

TA035.1IP60 Rev: 03-12

CAPACITY DATA - FULL LOAD

COOLING All performance at 1200 CFM and 9.0 GPM

EFT Range (Standard) 50°F to 100°F

Entering Fluid Temp. (°F)	Entering Air Temp. (°F)	Total Capacity (MBtuH)	Sensible Capapcity (MBtuH)	Sensible to Total Ratio	Power Input (kW)	Heat of Reject (MBtuH)	EER
50°	70°db 61°wb	36.10	23.53	0.65	1.67	41.81	21.6
60°		34.64	22.76	0.66	1.86	41.00	18.6
70°		33.18	22.08	0.67	2.05	40.19	16.2
85°		30.99	21.16	0.68	2.34	38.97	13.3
100°		28.80	20.36	0.71	2.62	37.75	11.0
50°	75°db 63°wb	38.68	28.14	0.73	1.68	44.43	23.0
60°		37.12	27.23	0.73	1.87	43.52	19.8
70°		35.56	26.41	0.74	2.06	42.61	17.2
85°		33.22	25.33	0.76	2.35	41.24	14.1
100°		30.87	24.37	0.79	2.64	39.87	11.7
50°	80°db 67°wb	42.47	31.08	0.73	1.70	48.26	25.0
60°		40.75	30.08	0.74	1.89	47.20	21.6
70°		39.04	29.17	0.75	2.08	46.14	18.8
85°		36.47	27.98	0.77	2.37	44.56	15.4
100°		33.91	26.92	0.79	2.66	42.97	12.8
50°	85°db 71°wb	46.25	34.05	0.74	1.71	52.08	27.1
60°		44.39	32.95	0.74	1.90	50.88	23.3
70°		42.52	31.96	0.75	2.10	49.68	20.3
85°		39.73	30.65	0.77	2.39	47.88	16.6
100°		36.94	29.49	0.80	2.68	46.08	13.8

HEATING **EFT Range (Standard) 25°F to 80°F**

Entering Fluid Temp. (°F)	Entering Air Temp. (°F)	Total Capacity (MBtuH)	Power Input (kW)	Heat of Abs. (MBtuH)	COP
25°	60°	26.76	1.99	19.96	3.9
30°		28.87	2.06	21.83	4.1
40°		33.08	2.20	25.58	4.4
50°		38.04	2.33	30.08	4.8
60°		42.34	2.47	33.92	5.0
70°		46.64	2.60	37.75	5.2
80°		50.93	2.74	41.59	5.5
25°	70°	25.32	2.03	18.39	3.7
30°		27.31	2.10	20.15	3.8
40°		31.29	2.24	23.66	4.1
50°		35.97	2.37	27.87	4.4
60°		40.03	2.51	31.46	4.7
70°		44.09	2.65	35.05	4.9
80°		48.16	2.79	38.64	5.1
25°	80°	23.62	2.07	16.55	3.3
30°		25.47	2.14	18.16	3.5
40°		29.18	2.28	21.39	3.7
50°		33.55	2.42	25.27	4.1
60°		37.33	2.57	28.57	4.3
70°		41.11	2.71	31.87	4.4
80°		44.89	2.85	35.17	4.6

Shaded areas requires Antifreeze

Condensing units contain compressor, reversing valve, expansion valve metering device, and water to refrigerant heat exchangers. Also included are safety controls: Overload protection for compressors, high and low refrigerant pressure switches, solid state lock-out circuit and optional UL approved internal Heat Recovery Package. Air handlers contain refrigerant to air heat exchanger, expansion valve metering device, ECM fan motor and blower. Optional factory installed UL approved internal electric heat with overload protection and magnetic contactors (208/230-1-60 only) and/or Ground Loop Pump with purge connections available. Performance based on ARI/ISO rated air flow, fluid flow and voltage. For conditions other than rated, consult the Bosch EAD selection software. Due to variations in installation actual performance may vary marginally from tabulated values.

FHP Manufacturing Co.
601 N.W. 65th Court
Fort Lauderdale, FL 33309
Phone: (954) 776-5471
Fax: (800) 776-5529
http://www.bosch-climate.us

TA035.2IP60 Rev: 03-12

BOSCH SPLIT UNITS TA049-XCSC / TA049-XAHX/AVX
SPECIFICATION DATA SHEET

TA049

CAPACITY DATA - PART LOAD

COOLING All performance at 13000 CFM and 12.0 GPM

EFT Range (Standard) 50°F to 100°F

Entering Fluid Temp. (°F)	Entering Air Temp. (°F)	Total Capacity (MBtuH)	Sensible Capapcity (MBtuH)	Sensible to Total Ratio	Power Input (kW)	Heat of Reject (MBtuH)	EER
50°	70°db 61°wb	37.65	28.42	0.75	1.17	41.65	32.1
60°		36.39	27.70	0.76	1.37	41.06	26.6
70°		35.12	27.08	0.77	1.57	40.47	22.4
85°		33.23	26.30	0.79	1.86	39.58	17.9
100°		31.34	25.67	0.82	2.15	38.69	14.6
50°	75°db 63°wb	40.35	33.98	0.84	1.18	44.37	34.2
60°		39.00	33.12	0.85	1.38	43.69	28.3
70°		37.65	32.38	0.86	1.57	43.02	23.9
85°		35.62	31.45	0.88	1.87	42.00	19.1
100°		33.59	30.71	0.91	2.16	40.98	15.5
50°	80°db 67°wb	44.30	37.52	0.85	1.19	48.35	37.3
60°		42.81	36.57	0.85	1.39	47.55	30.9
70°		41.33	35.76	0.87	1.59	46.74	26.1
85°		39.11	34.73	0.89	1.88	45.54	20.8
100°		36.89	33.91	0.92	2.18	44.33	16.9
50°	85°db 71°wb	48.24	41.10	0.85	1.20	52.32	40.3
60°		46.63	40.06	0.86	1.40	51.40	33.4
70°		45.02	39.16	0.87	1.60	50.47	28.2
85°		42.60	38.05	0.89	1.90	49.08	22.5
100°		40.19	37.15	0.92	2.20	47.69	18.3

HEATING EFT Range (Standard) 25°F to 80°F

Entering Fluid Temp. (°F)	Entering Air Temp. (°F)	Total Capacity (MBtuH)	Power Input (kW)	Heat of Abs. (MBtuH)	COP
25°	60°	27.79	1.82	21.59	4.5
30°		29.35	1.84	23.08	4.7
40°		32.47	1.88	26.04	5.1
50°		36.30	1.93	29.72	5.5
60°		39.48	1.97	32.75	5.9
70°		42.66	2.02	35.78	6.2
80°		45.84	2.06	38.82	6.5
25°	70°	26.29	1.85	19.99	4.2
30°		27.77	1.87	21.38	4.4
40°		30.71	1.92	24.18	4.7
50°		34.33	1.96	27.64	5.1
60°		37.34	2.01	30.49	5.5
70°		40.34	2.05	33.35	5.8
80°		43.35	2.10	36.20	6.1
25°	80°	24.53	1.89	18.09	3.8
30°		25.90	1.91	19.39	4.0
40°		28.65	1.96	21.97	4.3
50°		32.02	2.00	25.19	4.7
60°		34.82	2.05	27.83	5.0
70°		37.62	2.09	30.47	5.3
80°		40.42	2.14	33.11	5.5

Shaded areas requires Antifreeze

FLUID PRESSURE DROP

Fluid Flow	Press. Drop	
(GPM)	(FOH)	(PSIG)
6.0	2.3	1.0
7.0	3.0	1.3
9.5	5.3	2.3
12.0	8.0	3.5
16.0	13.4	5.8

ARI PERFORMANCE CERTIFIED ANSI/ARI/ASHRAE/ISO Standard 13256-1

c UL us

TA049.1IP60 Rev: 03-12

CAPACITY DATA - FULL LOAD

COOLING All performance at 1700 CFM and 12.0 GPM

EFT Range (Standard) 50°F to 100°F

Entering Fluid Temp. (°F)	Entering Air Temp. (°F)	Total Capacity (MBtuH)	Sensible Capapcity (MBtuH)	Sensible to Total Ratio	Power Input (kW)	Heat of Reject (MBtuH)	EER
50°	70°db 61°wb	48.95	31.89	0.65	2.28	56.74	21.4
60°		47.04	30.90	0.66	2.51	55.59	18.8
70°		45.13	30.01	0.67	2.73	54.45	16.5
85°		42.27	28.85	0.68	3.06	52.72	13.8
100°		39.40	27.84	0.71	3.40	51.00	11.6
50°	75°db 63°wb	52.46	38.15	0.73	2.30	60.29	22.9
60°		50.41	36.97	0.73	2.52	59.01	20.0
70°		48.37	35.92	0.74	2.74	57.74	17.6
85°		45.31	34.54	0.76	3.08	55.82	14.7
100°		42.24	33.33	0.79	3.42	53.90	12.4
50°	80°db 67°wb	57.59	42.14	0.73	2.31	65.48	24.9
60°		55.35	40.84	0.74	2.54	64.01	21.8
70°		53.11	39.68	0.75	2.76	62.55	19.2
85°		49.75	38.15	0.77	3.10	60.35	16.0
100°		46.39	36.82	0.79	3.44	58.14	13.5
50°	85°db 71°wb	62.72	46.16	0.74	2.33	70.67	26.9
60°		60.29	44.74	0.74	2.56	69.01	23.6
70°		57.85	43.47	0.75	2.79	67.36	20.8
85°		54.20	41.80	0.77	3.13	64.87	17.3
100°		50.54	40.35	0.80	3.47	62.38	14.6

HEATING EFT Range (Standard) 25°F to 80°F

Entering Fluid Temp. (°F)	Entering Air Temp. (°F)	Total Capacity (MBtuH)	Power Input (kW)	Heat of Abs. (MBtuH)	COP
25°	60°	36.81	2.74	27.45	3.9
30°		38.95	2.79	29.44	4.1
40°		43.22	2.87	33.41	4.4
50°		48.44	2.96	38.32	4.8
60°		52.79	3.05	42.38	5.1
70°		57.15	3.14	46.43	5.3
80°		61.50	3.23	50.48	5.6
25°	70°	34.83	2.79	25.31	3.7
30°		36.84	2.83	27.17	3.8
40°		40.88	2.93	30.89	4.1
50°		45.81	3.02	35.52	4.5
60°		49.92	3.11	39.32	4.7
70°		54.04	3.20	43.13	5.0
80°		58.15	3.29	46.94	5.2
25°	80°	32.49	2.85	22.77	3.3
30°		34.37	2.89	24.49	3.5
40°		38.13	2.99	27.93	3.7
50°		42.72	3.08	32.21	4.1
60°		46.55	3.17	35.73	4.3
70°		50.39	3.26	39.25	4.5
80°		54.22	3.36	42.76	4.7

Shaded areas requires Antifreeze

Condensing units contain compressor, reversing valve, expansion valve metering device, and water to refrigerant heat exchangers. Also included are safety controls: Overload protection for compressors, high and low refrigerant pressure switches, solid state lock-out circuit and optional UL approved internal Heat Recovery Package. Air handlers contain refrigerant to air heat exchanger, expansion valve metering device, ECM fan motor and blower. Optional factory installed UL approved internal electric heat with overload protection and magnetic contactors (208/230-1-60 only) and/or Ground Loop Pump with purge connections available. Performance based on ARI/ISO rated air flow, fluid flow and voltage. For conditions other than rated, consult the Bosch EAD selection software. Due to variations in installation actual performance may vary marginally from tabulated values.

FHP Manufacturing Co.
601 N.W. 65th Court
Fort Lauderdale, FL 33309
Phone: (954) 776-5471
Fax: (800) 776-5529
http://www.bosch-climate.us

BOSCH SPLIT UNITS TA061-XCSC / TA061-XAHX/AVX
SPECIFICATION DATA SHEET

TA061

CAPACITY DATA - PART LOAD

COOLING All performance at 1500 CFM and 15.0 GPM

EFT Range (Standard) 50°F to 100°F

Entering Fluid Temp. (°F)	Entering Air Temp. (°F)	Total Capacity (MBtuH)	Sensible Capapcity (MBtuH)	Sensible to Total Ratio	Power Input (kW)	Heat of Reject (MBtuH)	EER
50°	70°db 61°wb	47.18	30.54	0.65	1.27	51.51	37.3
60°		45.41	29.64	0.65	1.55	50.71	29.2
70°		43.64	28.84	0.66	1.84	49.92	23.7
85°		40.98	27.79	0.68	2.27	48.73	18.0
100°		38.32	26.89	0.70	2.70	47.55	14.2
50°	75°db 63°wb	50.53	36.44	0.72	1.27	54.87	39.7
60°		48.63	35.37	0.73	1.56	53.96	31.1
70°		46.73	34.41	0.74	1.85	53.05	25.2
85°		43.89	33.17	0.76	2.28	51.69	19.2
100°		41.04	32.10	0.78	2.72	50.32	15.1
50°	80°db 67°wb	55.42	40.19	0.73	1.28	59.80	43.2
60°		53.34	39.01	0.73	1.57	58.72	33.9
70°		51.26	37.96	0.74	1.87	57.63	27.5
85°		48.14	36.59	0.76	2.30	56.00	20.9
100°		45.02	35.40	0.79	2.74	54.38	16.4
50°	85°db 71°wb	60.31	43.98	0.73	1.29	64.73	46.6
60°		58.05	42.69	0.74	1.59	63.47	36.6
70°		55.79	41.54	0.74	1.88	62.21	29.7
85°		52.40	40.04	0.76	2.32	60.32	22.6
100°		49.00	38.75	0.79	2.76	58.43	17.7

HEATING **EFT Range (Standard) 25°F to 80°F**

Entering Fluid Temp. (°F)	Entering Air Temp. (°F)	Total Capacity (MBtuH)	Power Input (kW)	Heat of Abs. (MBtuH)	COP
25°	60°	35.85	2.37	27.76	4.4
30°		38.34	2.40	30.14	4.7
40°		43.32	2.47	34.91	5.1
50°		49.27	2.53	40.63	5.7
60°		54.35	2.59	45.50	6.1
70°		59.43	2.66	50.36	6.6
80°		64.51	2.72	55.22	6.9
25°	70°	33.88	2.41	25.65	4.1
30°		36.24	2.45	27.89	4.3
40°		40.94	2.51	32.37	4.8
50°		46.56	2.58	37.77	5.3
60°		51.36	2.64	42.35	5.7
70°		56.16	2.71	46.92	6.1
80°		60.97	2.77	51.50	6.4
25°	80°	31.58	2.47	23.16	3.8
30°		33.77	2.50	25.23	4.0
40°		38.15	2.57	29.39	4.4
50°		43.39	2.63	34.39	4.8
60°		47.86	2.70	38.64	5.2
70°		52.33	2.77	42.88	5.5
80°		56.80	2.83	47.12	5.9

Shaded areas requires Antifreeze

FLUID PRESSURE DROP

Fluid Flow	Press. Drop	
(GPM)	(FOH)	(PSIG)
8.0	3.5	1.5
12.0	7.2	3.1
16.0	12.1	5.3
18.0	15.0	6.5
22.0	21.5	9.3

ARI PERFORMANCE CERTIFIED ANSI/ARI/ASHRAE/ISO Standard 13256-1

c UL us

TA061.1IP6 Rev: 03-12

CAPACITY DATA - FULL LOAD

COOLING All performance at 2000 CFM and 14.0 GPM

EFT Range (Standard) 50°F to 100°F

Entering Fluid Temp. (°F)	Entering Air Temp. (°F)	Total Capacity (MBtuH)	Sensible Capapcity (MBtuH)	Sensible to Total Ratio	Power Input (kW)	Heat of Reject (MBtuH)	EER
50°	70°db 61°wb	62.67	40.56	0.65	2.66	71.76	23.5
60°		60.48	39.48	0.65	3.01	70.76	20.1
70°		58.30	38.53	0.66	3.36	69.77	17.4
85°		55.03	37.33	0.68	3.88	68.27	14.2
100°		51.76	36.33	0.70	4.40	66.78	11.8
50°	75°db 63°wb	67.11	48.40	0.72	2.68	76.25	25.0
60°		64.77	47.11	0.73	3.03	75.11	21.4
70°		62.44	45.98	0.74	3.38	73.97	18.5
85°		58.94	44.54	0.76	3.90	72.25	15.1
100°		55.43	43.35	0.78	4.43	70.54	12.5
50°	80°db 67°wb	73.61	53.38	0.73	2.70	82.82	27.3
60°		71.05	51.96	0.73	3.05	81.47	23.3
70°		68.49	50.71	0.74	3.41	80.11	20.1
85°		64.65	49.13	0.76	3.93	78.08	16.4
100°		60.81	47.82	0.79	4.46	76.04	13.6
50°	85°db 71°wb	80.11	58.42	0.73	2.72	89.40	29.4
60°		77.32	56.86	0.74	3.08	87.82	25.1
70°		74.54	55.50	0.74	3.43	86.25	21.7
85°		70.36	53.77	0.76	3.97	83.90	17.7
100°		66.19	52.33	0.79	4.50	81.54	14.7

HEATING **EFT Range (Standard) 25°F to 80°F**

Entering Fluid Temp. (°F)	Entering Air Temp. (°F)	Total Capacity (MBtuH)	Power Input (kW)	Heat of Abs. (MBtuH)	COP
25°	60°	45.17	3.26	34.04	4.1
30°		49.37	3.38	37.85	4.3
40°		57.77	3.60	45.48	4.7
50°		67.49	3.83	54.43	5.2
60°		76.05	4.05	62.22	5.5
70°		84.62	4.28	70.01	5.8
80°		93.19	4.51	77.81	6.1
25°	70°	42.70	3.32	31.36	3.8
30°		46.66	3.44	34.93	4.0
40°		54.60	3.67	42.08	4.4
50°		63.78	3.90	50.48	4.8
60°		71.88	4.13	57.78	5.1
70°		79.97	4.36	65.09	5.4
80°		88.06	4.59	72.40	5.6
25°	80°	39.79	3.40	28.20	3.4
30°		43.49	3.52	31.49	3.6
40°		50.88	3.75	38.07	4.0
50°		59.43	3.99	45.82	4.4
60°		66.97	4.22	52.56	4.6
70°		74.50	4.46	59.29	4.9
80°		82.04	4.69	66.02	5.1

Shaded areas requires Antifreeze

Condensing units contain compressor, reversing valve, expansion valve metering device, and water to refrigerant heat exchangers. Also included are safety controls: Overload protection for compressors, high and low refrigerant pressure switches, solid state lock-out circuit and optional UL approved internal Heat Recovery Package. Air handlers contain refrigerant to air heat exchanger, expansion valve metering device, ECM fan motor and blower. Optional factory installed UL approved internal electric heat with overload protection and magnetic contactors (208/230-1-60 only) and/or Ground Loop Pump with purge connections available. Performance based on ARI/ISO rated air flow, fluid flow and voltage. For conditions other than rated, consult the Bosch EAD selection software. Due to variations in installation actual performance may vary marginally from tabulated values.

FHP Manufacturing Co.
601 N.W. 65th Court
Fort Lauderdale, FL 33309
Phone: (954) 776-5471
Fax: (800) 776-5529
http://www.bosch-climate.us

TA061.2IP60 Rev: 03-12

BOSCH SPLIT UNITS TA071-XCSC / TA071-XAHX/AVX
SPECIFICATION DATA SHEET

TA071

CAPACITY DATA - PART LOAD

COOLING All performance at 1500 CFM and 18.0 GPM

EFT Range (Standard) 50°F to 100°F

Entering Fluid Temp. (°F)	Entering Air Temp. (°F)	Total Capacity (MBtuH)	Sensible Capapcity (MBtuH)	Sensible to Total Ratio	Power Input (kW)	Heat of Reject (MBtuH)	EER
50°	70°db 61°wb	51.94	33.47	0.64	1.74	57.88	29.8
60°		50.20	32.62	0.65	2.03	57.11	24.8
70°		48.46	31.88	0.66	2.31	56.35	21.0
85°		45.85	30.96	0.68	2.74	55.20	16.7
100°		43.25	30.23	0.70	3.17	54.05	13.7
50°	75°db 63°wb	55.65	40.01	0.72	1.75	61.62	31.8
60°		53.79	39.00	0.73	2.04	60.74	26.4
70°		51.93	38.13	0.73	2.32	59.86	22.4
85°		49.14	37.03	0.75	2.75	58.54	17.8
100°		46.35	36.15	0.78	3.18	57.21	14.6
50°	80°db 67°wb	61.08	44.18	0.72	1.76	67.09	34.7
60°		59.04	43.06	0.73	2.05	66.04	28.8
70°		57.00	42.10	0.74	2.34	64.99	24.4
85°		53.94	40.89	0.76	2.77	63.41	19.4
100°		50.88	39.92	0.78	3.21	61.83	15.9
50°	85°db 71°wb	66.51	48.39	0.73	1.78	72.57	37.5
60°		64.29	47.16	0.73	2.07	71.35	31.1
70°		62.07	46.11	0.74	2.36	70.12	26.3
85°		58.75	44.79	0.76	2.80	68.29	21.0
100°		55.42	43.73	0.79	3.23	66.45	17.1

HEATING **EFT Range (Standard) 25°F to 80°F**

Entering Fluid Temp. (°F)	Entering Air Temp. (°F)	Total Capacity (MBtuH)	Power Input (kW)	Heat of Abs. (MBtuH)	COP
25°	60°	44.26	3.20	33.35	4.1
30°		46.93	3.25	35.83	4.2
40°		52.28	3.37	40.79	4.5
50°		58.79	3.48	46.91	4.9
60°		64.25	3.59	51.98	5.2
70°		69.71	3.71	57.05	5.5
80°		75.17	3.82	62.13	5.8
25°	70°	41.85	3.25	30.75	3.8
30°		44.38	3.31	33.08	3.9
40°		49.44	3.43	37.74	4.2
50°		55.58	3.54	43.49	4.6
60°		60.74	3.66	48.25	4.9
70°		65.90	3.77	53.02	5.1
80°		71.06	3.89	57.78	5.4
25°	80°	39.03	3.32	27.68	3.4
30°		41.39	3.38	29.84	3.6
40°		46.09	3.50	34.14	3.9
50°		51.82	3.62	39.46	4.2
60°		56.62	3.74	43.86	4.4
70°		61.43	3.86	48.26	4.7
80°		66.23	3.98	52.66	4.9

Shaded areas requires Antifreeze

FLUID PRESSURE DROP

Fluid Flow	Press. Drop	
(GPM)	(FOH)	(PSIG)
8.0	2.5	1.1
12.0	3.6	1.6
16.0	4.3	1.9
18.0	6.9	3.0
22.0	8.2	3.6

ARI PERFORMANCE CERTIFIED ANSI/ARI/ASHRAE/ISO Standard 13256-1

c UL us

TA071.1IP60 Rev: 03-12

CAPACITY DATA - FULL LOAD

COOLING All performance at 2300 CFM and 18.0 GPM

EFT Range (Standard) 50°F to 100°F

Entering Fluid Temp. (°F)	Entering Air Temp. (°F)	Total Capacity (MBtuH)	Sensible Capapcity (MBtuH)	Sensible to Total Ratio	Power Input (kW)	Heat of Reject (MBtuH)	EER
50°	70°db 61°wb	67.02	42.08	0.63	3.45	78.78	19.4
60°		65.13	41.23	0.63	3.77	77.99	17.3
70°		63.23	40.53	0.64	4.09	77.20	15.5
85°		60.40	39.74	0.66	4.58	76.01	13.2
100°		57.56	39.20	0.68	5.06	74.82	11.4
50°	75°db 63°wb	71.82	50.34	0.70	3.46	83.65	20.7
60°		69.79	49.33	0.71	3.79	82.73	18.4
70°		67.77	48.50	0.72	4.11	81.81	16.5
85°		64.73	47.55	0.73	4.60	80.43	14.1
100°		61.69	46.91	0.76	5.09	79.05	12.1
50°	80°db 67°wb	78.84	55.59	0.71	3.49	90.76	22.6
60°		76.62	54.48	0.71	3.82	89.65	20.1
70°		74.40	53.57	0.72	4.15	88.55	17.9
85°		71.07	52.52	0.74	4.64	86.89	15.3
100°		67.74	51.82	0.76	5.13	85.24	13.2
50°	85°db 71°wb	85.86	60.90	0.71	3.52	97.87	24.4
60°		83.45	59.68	0.72	3.85	96.58	21.7
70°		81.03	58.68	0.72	4.18	95.29	19.4
85°		77.41	57.55	0.74	4.67	93.35	16.6
100°		73.78	56.77	0.77	5.17	91.42	14.3

HEATING **EFT Range (Standard) 25°F to 80°F**

Entering Fluid Temp. (°F)	Entering Air Temp. (°F)	Total Capacity (MBtuH)	Power Input (kW)	Heat of Abs. (MBtuH)	COP
25°	60°	53.87	4.09	39.91	3.9
30°		58.25	4.22	43.85	4.0
40°		67.02	4.48	51.72	4.4
50°		77.31	4.74	61.12	4.8
60°		86.25	5.00	69.17	5.0
70°		95.20	5.27	77.22	5.3
80°		104.14	5.53	85.28	5.5
25°	70°	50.95	4.16	36.74	3.6
30°		55.10	4.30	40.43	3.8
40°		63.38	4.56	47.81	4.1
50°		73.10	4.83	56.62	4.4
60°		81.55	5.09	64.16	4.7
70°		90.00	5.36	71.70	4.9
80°		98.45	5.63	79.25	5.1
25°	80°	47.53	4.25	33.02	3.3
30°		51.39	4.39	36.41	3.4
40°		59.10	4.66	43.20	3.7
50°		68.15	4.93	51.32	4.0
60°		76.02	5.21	58.26	4.3
70°		83.89	5.48	65.20	4.5
80°		91.76	5.75	72.14	4.7

Shaded areas requires Antifreeze

Condensing units contain compressor, reversing valve, expansion valve metering device, and water to refrigerant heat exchangers. Also included are safety controls: Overload protection for compressors, high and low refrigerant pressure switches, solid state lock-out circuit and optional UL approved internal Heat Recovery Package. Air handlers contain refrigerant to air heat exchanger, expansion valve metering device, ECM fan motor and blower. Optional factory installed UL approved internal electric heat with overload protection and magnetic contactors (208/230-1-60 only) and/or Ground Loop Pump with purge connections available. Performance based on ARI/ISO rated air flow, fluid flow and voltage. For conditions other than rated, consult the Bosch EAD selection software. Due to variations in installation actual performance may vary marginally from tabulated values.

FHP Manufacturing Co.
601 N.W. 65th Court
Fort Lauderdale, FL 33309
Phone: (954) 776-5471
Fax: (800) 776-5529
http://www.bosch-climate.us

Blower Performance - CFM

Model	Full/ Part Load	Available External Static Pressure (Ins.,Gauge. Wet coil and filter included)												
		Blow-er Speed	0.10	0.20	0.30	0.40	0.50	0.60	0.70	0.80	0.90	1.00	1.10	1.20
TA025	FULL LOAD	+						1100						
		Norm.						950						
		-						800						
	PART LOAD	+					860							
		Norm.					750							
		-					640							
TA035	FULL LOAD	+						1380						
		Norm.						1200						
		-						1020						
	PART LOAD	+					1000							
		Norm.					900							
		-					800							
TA049	FULL LOAD	+						1950						
		Norm.						1700						
		-						1450						
	PART LOAD	+					1490							
		Norm.					1300							
		-					110							
TA061	FULL LOAD	+						2200						
		Norm.						2000						
		-						1700						
	PART LOAD	+					1725							
		Norm.					1500							
		-					1275							
TA071	FULL LOAD	+						NA						
		Norm.						2300						
		-						1900						
	PART LOAD	+					1600							
		Norm.					1500							
		-					1200							

Electrical Data

MODEL	Electrical Symbol	Voltage	Compressor		Blower Motor		Min. Circuit Amps	Max Fuse/ HARC
			RLA	LRA	HP	FLA		
Condensing Sections								
TA025-1CSC	1	208-230/1/60	10.3	52	-	-	12.9	20
TA035-1CSC	1	208-230/1/60	16.7	82	-	-	20.9	35
TA049-1CSC	1	208-230/1/60	21.2	96	-	-	26.5	45
TA061-1CSC	1	208-230/1/60	25.6	118	-	-	32.0	50
TA071-1CSC	1	208-230/1/60	27.2	150	-	-	34.0	60
Air Handlers								
TA025-1AHX	1	208-230/1/60	-	-	0.33	2.8	3.5	15
TA035-1AHX	1	208-230/1/60	-	-	0.5	4.3	5.4	15
TA049-1AHX	1	208-230/1/60	-	-	0.75	6.8	8.5	15
TA061-1AHX	1	208-230/1/60	-	-	0.75	6.8	8.5	15
TA071-1AHX	1	208-230/1/60	-	-	1.0	6.8	8.5	15

Note: All Air Handler Motors are single phase