UC SERIES

UC0 • UCX • UC0W • UC0Q • UCXW • UCXRX
Wall Mount Fan Coils

Wall / Closet Indoor Air Handler

Compatible with R32 and R454B

Compatible with R410A for Servicing Existing Equipment Only

1.5-3.0 Ton Cooling or Heating Pump

Up to 10 kW Electric Heat



AHRI CERTIFIED® www.ahridirectory.org
Unitary Small AC
AHRI Standard 210/240
Certification applies only when the complete system is listed with AHRI.

AHRI CERTIFIED® www.ahridirectory.org
Unitary Small HP
AHRI Standard 210/240
Certification applies only when the complete system is listed with AHRI.

TABLE OF CONTENTS

NOMENCLATURE 3
SERIES FEATURES 4
UC0 7
UC0W 10
UC0Q 13
UCX 18
UCXW 22
UCXRX 26

First Co.'s customer is ultimately responsible for confirming which fan coil models are compatible with selected outdoor unit(s) and which expansion valves (if any) are required. To determine certified indoor/outdoor combinations, go to www.firstco.com or contact the factory.

In keeping with its policy of continuous progress and product improvement, First Co. reserves the right to make changes without notice.

NOMENCLATURE

25 UCX 03 X 1 0 A V 0 0 0 F

UNIT SIZE
18, 19, 20 } 18,000 BTUH
24, 25, 26 } 24,000 BTUH
30, 31 } 30,000 BTUH
36, 37, 38 } 36,000 BTUH

SERIES
UC0
UCX

HEAT OPTION
00 - 0 KW No Heat
03 - 3 KW
04 - 4 KW
05 - 5 KW
06 - 6 KW
08 - 8 KW
10 - 10 KW
W3 - 3 Row HW
Q3 - 3 Row Pump HW
R3 - 3 Row Hi Flow Pump HW
E3 - 3 Row ECM Pump HW

MOTOR TYPE
0 - PSC
X - ECM Multispeed

VOLTAGE
1 - 120/1/60
2 - 208-230/1/60

CABINET OPTIONS
0 - Standard Front Return
B - Bottom Return

REFRIGERANT
A - R410A (for servicing existing equipment only)
B - R454B
C - R32
Z - Field Convertible to R454B or R32

METERING DEVICE
P - Piston/Orifice
V - Non Bleed TXV w/ Check

OPTIONS: CONTROL
0 - Standard

OPTIONS: SENSORS/SWITCHES
0 - Standard

OPTIONS: GENERAL
0 - Standard

BRAND
F - First Co.

UC SERIES
WALL MOUNT FAN COILS

APPLICATION
The UC unit is designed as an upflow indoor air handler for use with today's higher efficiency split-system heat pumps or condensing units.

The cabinet is made of galvanized steel and is fully insulated. The condensate pan is sloped to ensure proper drainage. For installation flexibility, drain piping can come from the bottom, front, left, or right side of the cabinet.

Compatible with R454B and R32 using non-bleed TXV's. Units ordered for R454B and R32 (Options B and C) are factory configured with TXV or piston and factory mounted refrigerant sensor.

Field convertible units (Option Z) are available which can be field configured with TXV and refrigerant sensor kit.

The removable door of the optional wall panel now includes "captive screws" that will not fall out when the door is removed for service or filter change.

STANDARD FEATURES
- 240V motor, 24V controls
- Factory installed disconnect
- Factory or field installed electric heat on (heater kit) units only
- Separate compartment for drain connections
- Drain pan has 3/4" male or female primary and secondary fittings
- High efficiency cooling coil
- Convenient equalizer connection for factory or field installed TXV's (non- bleed type)
- Easily accessible 1" filter
- Cabinet air leakage is no more than 2% when tested in accordance with ASHRAE 193

OPTIONAL FEATURES
Optional accessories include field installed Heater Kits, factory or field installed TXV Kits (non-bleed type), Wall Panels with Captive Screws, Condensate Overflow Switch, Closet Hanger Bracket Kit, and Bottom Return Air Kit.



Unit shown with optional bottom return air kit

UC SERIES
WALL MOUNT FAN COILS

ACCESSORIES

OPTIONAL ACCESSORIES (ALL FIELD INSTALLED)					
DESCRIPTION	PART #			DIMENSIONS	
	18-31UC	32-37UC	38UC	(OUTSIDE FRAME)	(INSIDE FRAME)
WALL PANEL (1)	9PWUC01L (Louvered) 9PWUC01S (Solid)	9PWUC02L (Louvered) 9PWUC02S (Solid)	9PWUC04L (Louvered) 9PWUC04S (Solid)	43-3/8 X 25-5/8 46-3/8 X 25-5/8 52-1/2 X 31-5/8	40-3/8 X 22-5/8 43-3/8 X 22-5/8 49-1/2 X 28-5/8
HANGER BRKT SET	90PK3	90PK3	90PK31	1-3/4 X 22-1/8 1-3/4 X 27-15/16	- - -
BOTTOM RETURN AIR KIT	90PK4	90PK5	90PK51	19-13/16 X 22 20-7/16 X 22 20-5/8 X 28	- - -
3kW HEATER KIT (2)	9EHUC1-203 (2)	9EHUC2-203 (2)	9EHUC2-203 (2)	- - -	- - -
5kW HEATER KIT (2)	9EHUC1-205 (2)	9EHUC2-205 (2)	9EHUC2-205 (2)		
6kW HEATER KIT (2)	9EHUC1-206 (2)	9EHUC2-206 (2)	9EHUC2-206 (2)		
8kW HEATER KIT (2)	9EHUC1-208 (2)	9EHUC2-208 (2)	9EHUC2-208 (2)		
10kW HEATER KIT (2)	9EHUC1-210 (2)	9EHUC2-210 (2)	9EHUC2-210 (2)		
CONDENSATE OVERFLOW KIT	SS3	SS3	SS3	- - -	- - -



Optional Wall Panel
Recessed wall application

NOTES:
1. Dimensions for wall panels are the outside of the panels. Inside "Opening" dimensions are approximately 3" less than shown.
2. Heater kits are only approved for installation in the "0-HK" models. Heater kits are not approved for UC units that already contain factory installed heaters.

ACCESSORIES

IMPORTANT NOTE

When these units are used with A2L refrigerants they must be fitted with a REFRIGERANT SENSOR and if using a TXV then the TXV must be compatible with the A2L refrigerant that is used. Failure to use a REFRIGERANT SENSOR may result in unit damage, property damage and/or death. Warranty will be void.

EXPANSION VALVE/REFRIGERANT SENSOR KITS (HEAT PUMP OR COOLING ONLY)		
PART NUMBER	**TYPE**	**SENSOR**
9EVR410-1	R410A	FOR SERVICING EXISTING EQUIPMENT ONLY
9EVR454B-4	R454B	CE100
9EVR32-4	R32	CE100
9EVR454B-1A	R454B	NO SENSOR
9EVR32-1A	R32	NO SENSOR
9EVRA2L-3	R454B/R32	CE100

NOTES:
1. Above expansion valve kits are approved for both cooling only (non heat pump) or heat pumps applications.
2. Valves are non-bleed type. Field added. Hard start kit may be required.
3. Valves have screw-on connections.
4. Field installed for field convertible (Z) option.



Condensate Overflow Switch
#SS3



Condensate drain connections
(With drain cover removed)
(Male connections shown)



Unit shown with optional
bottom return air kit

PHYSICAL DIMENSIONS									
UNIT MODEL	A	B	C	D	E	F	FILTER SIZE	LIQUID LINE	SUCTION LINE
18-25UC0	22-1/8	15-1/8	40	14	10.5	3-5/8	18 X 18	3/8 O.D.	5/8 O.D.
26/30/31UC0	22-1/8	15-1/8	40	14	10.5	3-5/8	18 X 20	3/8 O.D.	3/4 O.D.
32/37UC0	22-1/8	18-1/8	43	14	13	3-5/8	18 X 24	3/8 O.D.	3/4 O.D.
38UC0	28-1/8	21	46	16-1/2	13	7-1/2	24 x 24	3/8 O.D.	7/8 O.D.

NOTES:
1. Coil connections are sweat

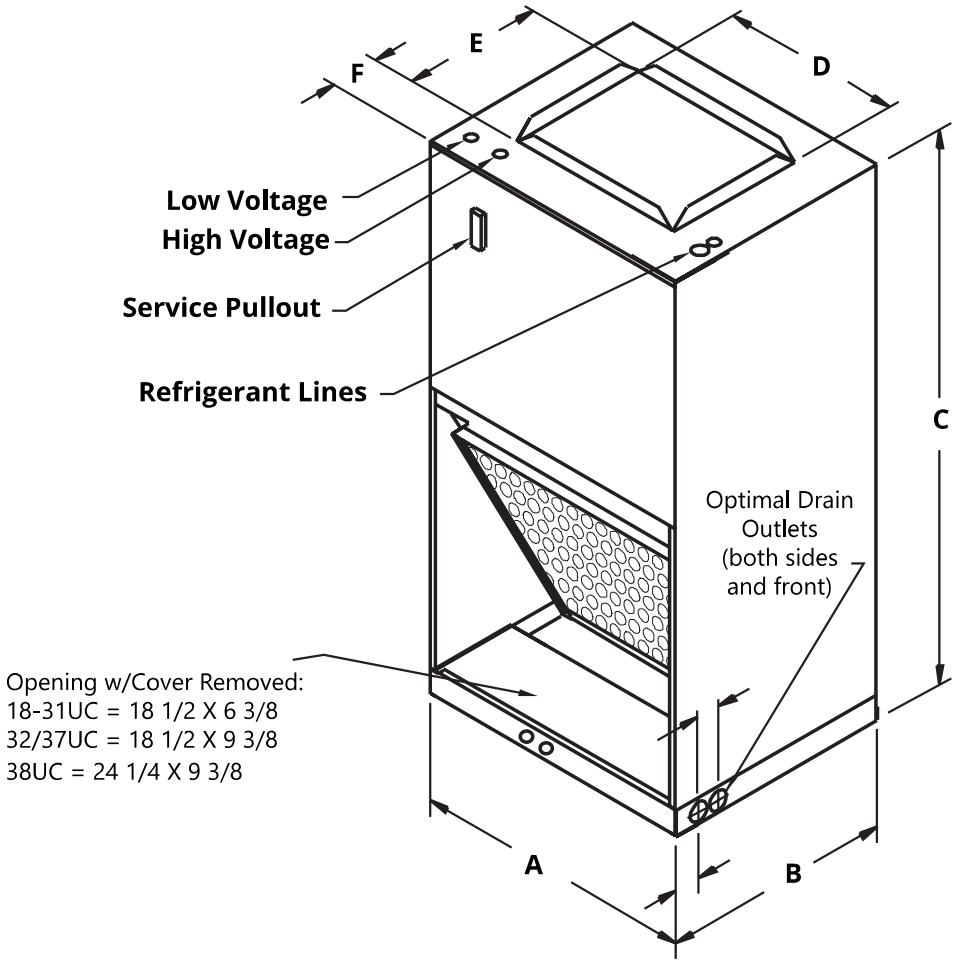

NOTES:
1. 0 - 10 kW is available for ALL UC models
   Model number example - 18UC5 (1.5 Ton, 5kW)

PERFORMANCE DATA													
UNIT MODEL		NOM. CFM	NOM. COOL BTUH	ELECTRIC HEAT CAPACITY				TOTAL AMPS		MIN. AMPACITY		MAX. OVERCURRENT PROTECTION	
				kW		BTUH							
				240V	208V	240V	208V	240V	208V	240V	208V	240V	208V
18UC0 19UC0 20UC0	0-HK	600	18000	0	0	0	0	1.70	1.70	2	2	15	15
	3			3	2.3	10239	7781	14	12.76	18	16	20	20
24UC0 25UC0 26UC0	5	800	25000	5	3.8	17065	12969	23	19.97	28	26	30	30
	6			6	4.5	20478	15358	27	23.34	33	29	35	30
	8			8	6.0	27304	20750	35	30.55	44	38	45	40
	10			10	7.5	34130	25597	43	37.76	54	47	60	50
31UC0 30UC0 32UC0	0-HK	1000	30000	0	0	0	0	2.0	2.0	3	3	15	15
	3			3	2.3	10239	7781	15	15	18	16	20	20
36UC0 37UC0 38UC0	5	1200	36000	5	3.8	17065	12969	23	20	29	26	30	30
	6			6	4.5	20478	15358	27	24	34	30	35	30
	8			8	6.0	27304	20750	35	31	44	39	45	40
	10			10	7.5	34130	25597	44	38	55	48	60	50

BLOWER DATA							
MODEL	MOTOR (HP) (240V)	FAN SPEED	CFM VS. EXTERNAL STATIC PRESSURE				
			0.10	0.20	0.30	0.40	0.50
18UC0	1/6	HIGH	880	840	810	790	760
		MEDIUM	660	640	630	600	570
		LOW	540	520	500	470	440
19UC0	1/6	HIGH	850	820	780	750	710
		MEDIUM	660	640	610	570	540
		LOW	540	520	500	470	430
20UC0	1/6	HIGH	840	800	760	710	660
		MEDIUM	660	640	610	570	530
		LOW	540	510	500	460	420
24UC0	1/6	HIGH	870	840	810	780	750
		MEDIUM	670	650	630	590	560
		LOW	560	540	510	480	440
25UC0	1/6	HIGH	840	800	760	710	670
		MEDIUM	660	640	620	590	550
		LOW	550	530	490	460	430
26UC0	1/6	HIGH	860	830	790	740	690
		MEDIUM	670	650	630	590	550
		LOW	550	530	500	470	440
30UC0		HIGH	1080	1045	1030	975	920
		MEDIUM	950	940	910	865	820
		LOW	865	855	825	790	745
31UC0	1/4	HIGH	910	880	840	790	740
		MED-HIGH	860	830	790	740	690
		MED-LOW	830	790	750	710	660
32UC0	1/4	MED-HIGH	1080	1040	1000	950	900
		MED-LOW	970	940	900	850	800
		LOW	690	650	600	550	510
36UC0	1/4	HIGH	1300	1240	1180	1120	1050
		MED-HIGH	1100	1050	1010	960	910
		MED-LOW	980	950	920	880	830
37UC0	1/4	HIGH	1240	1180	1120	1070	1020
		MED-HIGH	1080	1040	1000	960	910
		MED-LOW	980	950	910	870	820
38UC0	1/2	HIGH	1430	1400	1370	1340	1290
		MED-HIGH	1260	1230	1200	1180	1160
		MED-LOW	1000	990	980	970	950

NOTES:
1. Add nominal .05 static if wall panel is used.
2. ALL models have multi-speed motors but are factory wired on the shaded speeds.
3. Contact factory for correct matches with outdoor units.
4. Approved for installation with "0" clearance to combustible material.

UC0W OPTIONAL FEATURES

Optional features include Wall Panels with Captive Screws, factory or field installed TXVs (non-bleed type), Condensate Overflow Switch, Closet Hanger Bracket Kit, and Bottom Return Air Kit.

In recessed wall applications utilizing the optional wall panel, the hot water coil can be removed without modifications to the drywall. To allow this feature, the top of the **UC0W** cabinet is notched for coil removal and the wall panel is 3" taller than the cabinet.

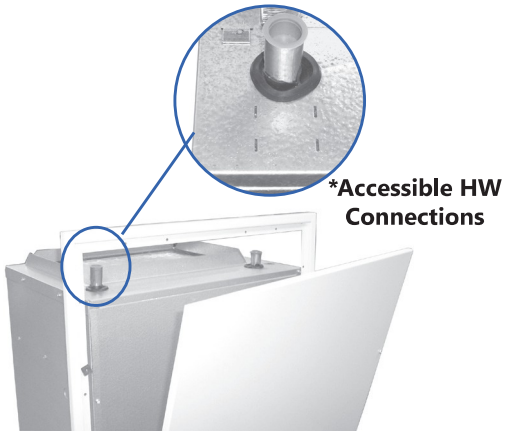

Unit shown with optional louvered wall panel
Recessed wall application

HEATING PERFORMANCE AND ELECTRICAL DATA

UNIT MODEL	NOMINAL COOLING BTUH	P.D. (FT. WATER) (COIL ONLY)	HEATING BUTH (1000) AT ENTERING WATER TEMPERATURE (1) Delta-T 20°						MIN. CIRCUIT AMPACITY	MAX. FUSE OR HACR BREAKER
			120°F	GPM	140°F	GPM	180°F	GPM		
18-20UC0W	18,000	3.3 2.1 1.2	19.1 18.5 17.6	1.9 1.9 1.8	26.8 25.9 24.6	2.7 2.6 2.5	42.1 40.7 38.7	4.2 4.1 3.9	8	15
24-26UC0W	24,000 / 18,000	3.3 2.1 1.2	22.9 22.1 20.8	2.3 2.2 2.1	32.1 31.0 29.2	3.2 3.1 2.9	50.4 48.7 45.9	5.0 4.9 4.6	8	15
31UC0W	30,000 / 24,000	3.3 2.1 1.2	26.1 25.0 23.5	2.6 2.5 2.4	36.5 35.1 32.9	3.7 3.5 3.3	57.3 55.1 51.7	5.7 5.5 5.2	11	15
32UC0W	30,000 / 24,000	3.6 2.4 1.3	28.1 26.9 25.2	2.8 2.7 2.5	39.3 37.7 35.3	3.9 3.8 3.5	61.7 59.2 55.4	6.2 5.9 5.5	11	15
36-38UC0W	36,000 / 30,000	3.6 2.4 1.3	30.9 29.6 27.5	3.1 3.0 2.8	43.2 41.3 38.5	4.3 4.1 3.9	67.9 64.9 60.5	6.8 6.5 6.1	11	15

NOTES:
1. Heating output will not exceed output of hot water source.
2. Approved for installation with 0" clearance to combustible materials.
3. Contact factory for correct matches with outdoor unit or go to www.ahridirectory.org or www.firstco.co/ratings

(1) Heat BTUH is at 70°F entering air temperature.
Based pm 20°F Delta -T. Velocity not to exceed 4ft./sec.

First Co.'s customer is ultimately responsible for confirming which fan coil models are compatible with selected outdoor unit(s) and which expansion valves (if any) are required. To determine certified indoor/outdoor combinations, go to www.ahridirectory.org.

PHYSICAL DIMENSIONS								
UNIT MODEL	A	B	C	D	E	FILTER SIZE	LIQUID LINE	SUCTION LINE
18-25UC0W	22-1/8	18	43	18	12-1/2	18 X 18	3/8" O.D.	5/8" O.D.
26/31UC0W	22-1/8	18	43	18	12-1/2	18 X 20	3/8" O.D.	3/4" O.D.
32-37UC0W	22-1/8	21	43	18	15-1/2	18 X 24	3/8" O.D.	3/4" O.D.
38UC0W	28-1/8	21	46	24-1/8	15-3/4	24 X 24	3/8" O.D.	7/8" O.D.

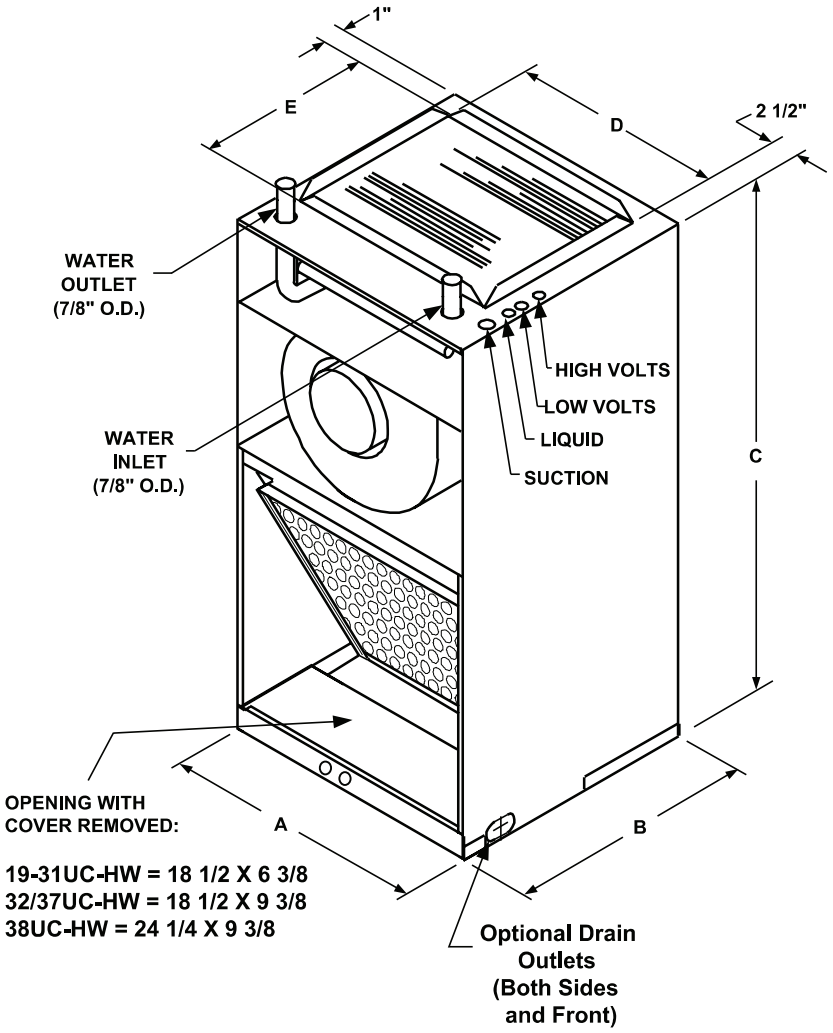

BLOWER DATA										
UNIT MODEL	MOTOR H.P. (120V)	MOTOR AMPS (120V)	FAN SPEED	CFM vs. EXTERNAL STATIC PRESSURE						
				0.10	0.15	0.20	0.25	0.30	0.40	0.50
18/19UC0W	1/3	5.4	MED-HIGH	790	775	760	745	730	700	670
			MED-LOW	710	695	680	665	650	630	610
			LOW	560	550	540	525	510	490	460
20UC0W	1/3	5.4	MED-HIGH	770	750	730	710	690	650	610
			MED-LOW	690	675	660	645	630	590	550
			LOW	540	525	510	495	480	450	420
24/25UC0W	1/3	5.4	HIGH	840	820	800	780	760	710	660
			MED-HIGH	770	750	730	710	690	650	610
			MED-LOW	690	665	660	645	630	590	550
26UC0W	1/3	5.4	HIGH	860	845	830	810	790	750	700
			MED-HIGH	780	765	750	735	720	680	640
			MED-LOW	700	685	670	655	640	600	560
31UC0W	1/2	8.1	HIGH	1070	1045	1020	995	970	920	850
			MED-HIGH	1020	1000	980	960	940	890	820
			MED-LOW	760	755	750	735	720	680	640
32UC0W	1/2	8.1	MED-HIGH	1140	1110	1080	1050	1020	960	900
			MED-LOW	900	885	870	855	840	790	740
			LOW	650	645	640	635	630	610	580
36/37UC0W	1/2	8.1	HIGH	1160	1135	1110	1080	1050	990	930
			MED-HIGH	1120	1095	1070	1045	1020	970	900
			MED-LOW	890	875	860	845	830	790	740
38UC0W	1/2	8.1	HIGH	1400	1375	1350	1325	1300	1250	1200
			MED	1260	1245	1230	1210	1190	1150	1100
			LOW	1090	1080	1070	1055	1040	1010	970

NOTES:
1. Add nominal .05 static when optional wall panel is used.
2. Shaded areas are factory motor settings.

In keeping with its policy of continuous progress and product improvement, First Co. Reserves the right to make changes without notice.

UC0Q OPTIONAL FEATURES

- Optional features include Wall Panels with Captive Screws Factory or Field installed TXVs (non-bleed type), Condensate Overflow Switch, Closet Hanger Bracket Kit, and Bottom Return Air Kit.
- In recessed wall applications utilizing the optional wall panel, the hot water coil can be removed without modifications to the drywall.
- To allow this feature, the top of the UC0Q cabinet is notched for coil removal and the wall panel is 3" taller than the cabinet.

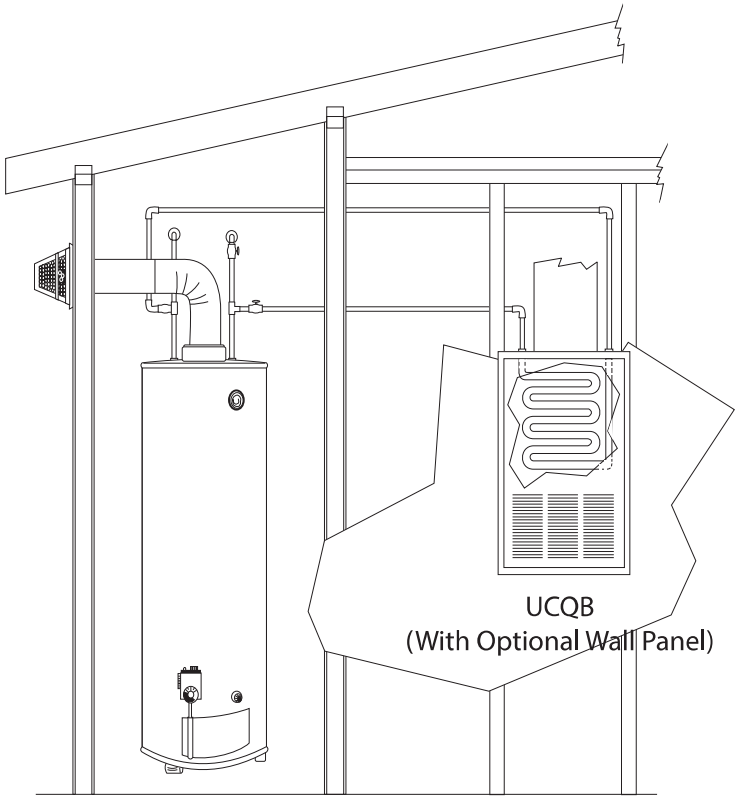

UC0Q
COMPATIBLE WITH GAS FIRED WATER HEATERS OR BOILERS
UP TO 45,300 BTUH HYDRONIC HEAT

PHYSICAL DIMENSIONS								
UNIT MODEL	A	B	C	D	E	FILTER SIZE	LIQUID LINE	SUCTION LINE
18-25UC0Q	22-1/8	18	43	18	12-1/2	18 X 18	3/8" O.D.	5/8" O.D.
26/31UC0Q	22-1/8	18	43	18	12-1/2	18 X 20	3/8" O.D.	3/4" O.D.
32-37UC0Q	22-1/8	21	43	18	15-1/2	18 X 24	3/8" O.D.	3/4" O.D.
38UC0Q	28-1/8	21	46	24-1/8	15-3/4	24 X 24	3/8" O.D.	7/8" O.D.

NOTE:
1. All coil connections are sweat

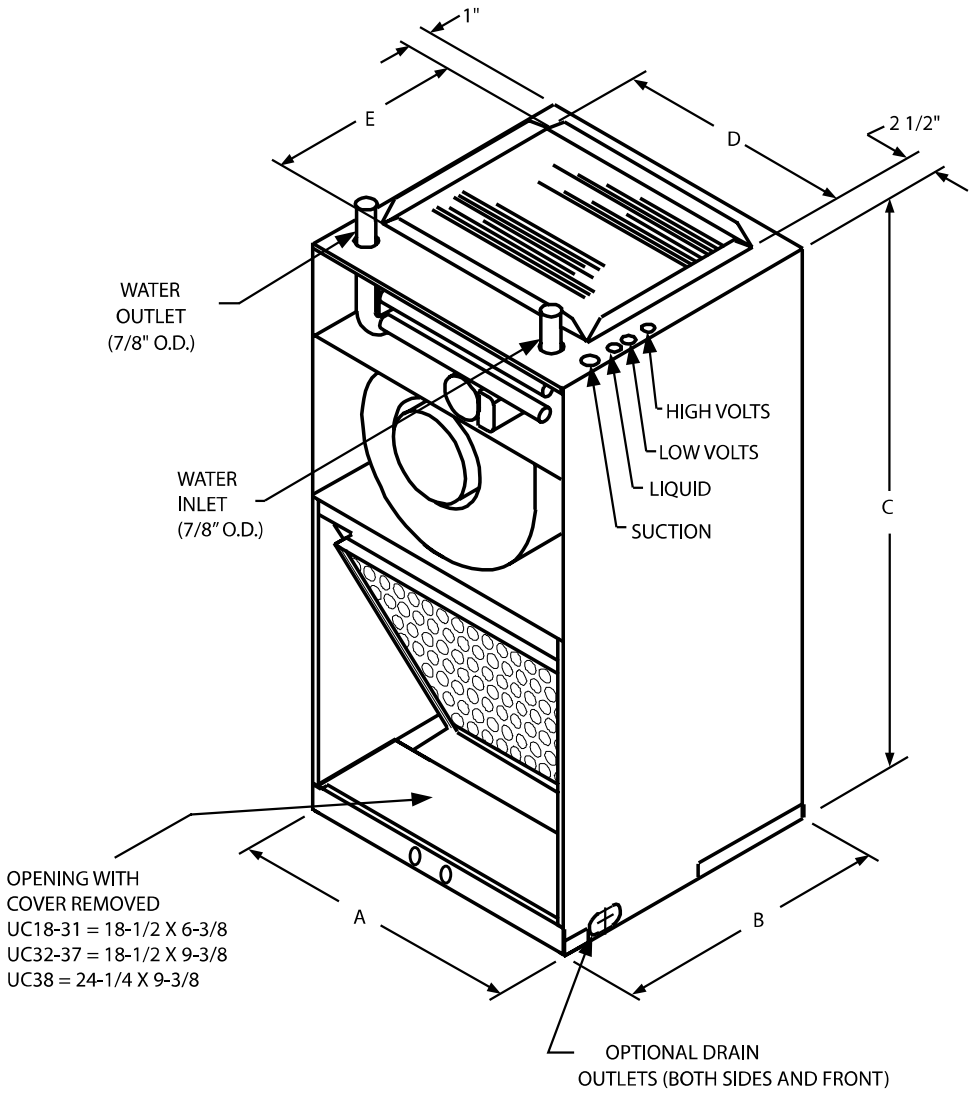

UC0Q
COMPATIBLE WITH GAS FIRED WATER HEATERS OR BOILERS
UP TO 45,300 BTUH HYDRONIC HEAT

PERFORMANCE DATA										
UNIT MODEL	NOMINAL COOLING BTUH	HEATING BTUH (1000) ENTERING TEMPERATURE Delta -T 20°F & GPM				AMPS (MOTOR) (120V)	AMPS Low Flow Bronze Bump	AMPS Med. Flow Cast Iron Pump	MIN. CIRCUIT AMPACITY	MAX. FUSE OR HACR BREAKER
		120°F	GPM	140°F	GPM					
18-20UC0Q	18,000	18.5	1.9	25.9	2.6	5.4	0.75	0.54	8	15
24-26UC0Q	24,000 / 18,000	22.1	2.2	31.0	3.1	5.4	0.75	0.54	8	15
30-31UC0Q	30,000 / 24,000	25.0	2.5	35.1	3.5	8.1	0.75	0.54	11	15
32UC0Q	30,000 / 24,000	27.0	2.7	37.7	3.8	8.1	0.75	0.54	11	15
36/37UC0Q	36,000 / 30,000	29.6	3.0	41.3	4.1	8.1	0.75	0.54	11	15
38UC0Q	36,000 / 30,000	32.3	3.2	45.3	4.5	8.1	0.75	0.54	11	15

NOTES:
1.Heating output will not exceed output of hot water source.
2.Approved for installation with 0" clearance to combustible materials.
3.Contact factory for correct matches with outdoor unit.
(1) Heat BTUH is at 70°F entering air temperature.
(2) Based on 20° Delta -T. Velocity not to exceed 4ft./sec.

Pump Options:
Low lead bronze NSF Compliant max. head pressure 9.5FT
Cast Iron non potable max. head pressure 10.0FT
Low lead bronze NSF Compliant max. head pressure 15FT

ALL UC0Q OPTIONAL ACCESSORIES (FIELD INSTALLED)				
DESCRIPTION	PART NO.	FOR	DIMENSIONS	
WALL PANEL (1)	9PWUC03L 9PWUC04L	18-37UC0Q 38UC0Q	49-3/8 X 25-5/8 52-1/2 X 31-5/8 (Outside Frame)	46-3/8 x 22-5/8 49-1/2 X 28-5/8 (Inside Frame)
CLOSET BRKT.	90PK3 90PK31	18-37UC0Q 38UC0Q	1-3/4 X 22-1/8 1-3/4 X 27-15/16	---
BOTTOM RETURN AIR KIT	90PK5 90PK51	18-37UC0Q 38UC0Q	20-7/16 X 22 20-5/8 X 28	---
CONDENSATE OVERFLOW SWITCH	SS3	ALL UC0Q	---	---
FREEZE (2) PROTECTOR	941-1	ALL UC0Q	---	---

NOTES:
(1) Wall Panels are taller than the UC0Q cabinet to allow access to hot water coil connections.
(2) Energizes the pump if HW coil temperature falls below 40°

BLOWER DATA										
UNIT MODEL	MOTOR H.P. (120V)	MOTOR AMPS (120V)	FAN SPEED	CFM vs. EXTERNAL STATIC PRESSURE						
				0.10	0.15	0.20	0.25	0.30	0.40	0.50
18/19UC0Q	1/3	5.4	MED-HIGH	790	775	760	745	730	700	670
			MED-LOW	710	695	680	665	650	630	610
			LOW	560	550	540	525	510	490	460
20UC0Q	1/3	5.4	MED-HIGH	770	750	730	710	690	650	610
			MED-LOW	690	675	660	645	630	590	550
			LOW	540	525	510	495	480	450	420
24/25UC0Q	1/3	5.4	HIGH	840	820	800	780	760	710	660
			MED-HIGH	770	750	730	710	690	650	610
			MED-LOW	690	665	660	645	630	590	550
26UC0Q	1/3	5.4	HIGH	860	845	830	810	790	750	700
			MED-HIGH	780	765	750	735	720	680	640
			MED-LOW	700	685	670	655	640	600	560
30/31UC0Q	1/2	8.1	HIGH	1070	1045	1020	995	970	920	850
			MED-HIGH	1020	1000	980	960	940	890	820
			MED-LOW	760	755	750	735	720	680	640
32UC0Q	1/2	8.1	MED-HIGH	1140	1110	1080	1050	1020	960	900
			MED-LOW	900	885	870	855	840	790	740
			LOW	650	645	640	635	630	610	580
36/37UC0Q	1/2	8.1	HIGH	1160	1135	1110	1080	1050	990	930
			MED-HIGH	1120	1095	1070	1045	1020	970	900
			MED-LOW	890	875	860	845	830	790	740
38UC0Q	1/2	8.1	HIGH	1400	1375	1350	1325	1300	1250	1200
			MED	1260	1245	1230	1210	1190	1150	1100
			LOW	1090	1080	1070	1055	1040	1010	970

NOTES:
1. Add nominal .05 static when optional wall panel is used.
2. Shaded areas are factory motor settings.

NOTE:
If cast iron pump is used then the unit is not NSF/ANSI rated.

OPTIONAL FEATURES

Optional accessories include field installed Heater Kits (only for 0kW models), factory or field installed TXV Kits (non-bleed type), Wall Panels with Captive Screws, Condensate Overflow Switch, Closet Hanger Bracket Kit, and Bottom Return Air Kit.



Unit shown with optional bottom return air kit



Unit shown with optional bottom return air kit

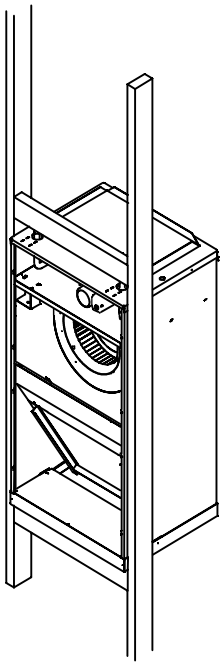

Typical recessed wall installation



Unit shown with front panel removed



Optional wall panel
Recessed wall application



Condensate Overflow Switch #SS3



Condensate drain connections
With drain cover removed
Thermoplastic pan shown

ELECTRICAL DATA													
UNIT MODEL		NOM. CFM	NOM. COOL BTUH	ELECTRIC HEAT CAPACITY				TOTAL AMPS		MIN. AMPACITY		MAX. OVERCURRENT PROTECTION	
				kW		BTUH							
				240V	208V	240V	208V	240V	208V	240V	208V	240V	208V
19UCX 20UCX	0-HK	600	18000	0	0	0	0	2.8	2.8	4	4	15	15
	3			3	2.3	10236	6824	15.3	13.6	20	18	20	20
	4			4	3.0	13648	10236	19.5	17.2	25	22	25	25
	5			5	3.8	17061	13648	23.6	20.8	30	27	30	30
	6			6	4.5	20473	15355	27.8	24.4	35	31	35	35
	8			8	6	27297	20473	36.1	31.6	46	40	50	40
	10			10	7.5	34121	25591	44.5	38.9	56	49	60	50
25UCX 26UCX	0-HK	800	24000/ 18000	0	0	0	0	2.8	2.8	4	4	15	15
	3			3	2.3	10236	6824	15.3	13.6	20	18	20	20
	4			4	3.0	13648	10236	19.5	17.2	25	22	25	25
	5			5	3.8	17061	13648	23.6	20.8	30	27	30	30
	6			6	4.5	20473	15355	27.8	24.4	35	31	35	35
	8			8	6.	27297	20473	36.1	31.6	46	40	50	40
	10			10	7.5	34121	25591	44.5	38.9	56	49	60	50
31UCX	0-HK	1000	30000/ 24000	0	0	0	0	4.1	4.1	6	6	15	15
	3			3	2.3	10236	6824	16.6	14.9	21	19	25	20
	4			4	3.0	13648	10236	20.8	18.5	26	24	30	25
	5			5	3.8	17061	13648	24.9	22.1	32	28	35	30
	6			6	4.5	20473	15355	29.1	25.7	37	33	40	35
	8			8	6.	27297	20473	37.4	32.9	47	42	50	45
	10			10	7.5	34121	25591	45.8	40.2	58	50	60	50
32UCX 37UCX 38UCX	0-HK	1200	36000/ 30000	0	0	0	0	6.0	6.0	8	8	15	15
	3			3	2.3	10236	6824	18.5	16.8	24	22	25	25
	5			5	3.8	17061	13648	26.8	24.0	34	31	35	35
	6			6	4.5	20473	15355	31.0	27.6	39	35	40	35
	8			8	6	27297	20473	39.3	34.8	50	44	50	45
	10			10	7.5	34121	25591	47.7	42.1	60	53	60	60

NOTES: (1) 0 - 10 kW is available for ALL UCX models

PERFORMANCE DATA									
UNIT MODEL	MOTOR HP	FAN SPEED TAP	MOTOR BHP	NOM. AMPS	CFM VS. EXTERNAL STATIC PRESSURE				
					0.10	0.20	0.30	0.40	0.50
19UCX 20UCX	1/3	5	0.23	1.9	850	830	800	770	730
		4	0.16	1.2	680	650	610	570	540
		3	0.13	1.0	610	570	530	490	460
25UCX 26UCX	1/3	5	0.33	2.4	1030	1000	970	930	890
		4	0.25	2.1	890	860	830	810	780
		3	0.19	1.5	770	740	710	680	640
		2	0.15	1.2	670	630	600	570	530
31UCX	1/2	4	0.50	2.8	1190	1140	1090	1040	980
		3	0.37	2.6	1120	1090	1060	1010	960
		2	0.27	2.0	940	910	880	860	830
		1	0.21	1.5	820	790	760	730	700
32UCX	3/4	4	0.41	2.9	1250	1220	1190	1150	1120
		3	0.35	2.5	1090	1060	1030	990	960
		2	0.25	1.5	980	940	910	870	840
		1	0.19	1.0	870	830	790	740	700
37UCX	3/4	5	0.75	3.9	1450	1390	1330	1260	1190
		4	0.41	3.1	1250	1220	1190	1150	1120
		3	0.33	2.3	1090	1060	1030	990	960
		2	0.27	1.9	980	940	910	870	840
38UCX	3/4	5	0.53	3.5	1400	1370	1350	1320	1290
		4	0.47	2.8	1310	1280	1250	1230	1200
		3	0.38	2.1	1160	1130	1100	1070	1040
		2	0.34	1.8	1090	1060	1020	990	960

NOTES:
1. Shaded rows are factory preset speeds.
2. Cooling = High Speed, Heating = Low Speed
3. Contact factory for correct matches with outdoor units.
4. Approved for installation with "0" clearance to combustible material.
5. Add nominal .05 static if wall panel is used.

UNIT MODEL	NOM. COOLING BTUH	MOTOR SPEED TAP CONNECTION	
		HIGH SPD (GRN LEAD)	LOW SPD (WHT LEAD)
19/20UCX	18,000	4	3
25/26UCX	18,000	3	2
	24,000	4	3
31UCX	24,000	3	2
	30,000	4	3
32UCX	24,000	2	1
	30,000	3	2
37UCX	30,000	4	3
	36,000	5	4
38UCX	30,000	3	2
	36,000	4	3

PHYSICAL DATA									
UNIT MODEL	A	B	C	D	E	F	FILTER SIZE	LIQUID LINE	SUCTION LINE
19-25UCX	22-1/8	15-1/8	40	14	10-1/2	3-5/8	18 X 18	3/8 O.D.	5/8 O.D.
26, 31UCX	22-1/8	15-1/8	40	14	10-1/2	3-5/8	18 X 20	3/8 O.D.	3/4 O.D.
32, 37UCX	22-1/8	18-1/8	43	14	13	3-5/8	18 X 24	3/8 O.D.	3/4 O.D.
38UCX	28-1/8	21	46	16-1/2	13	7-1/2	24 x 24	3/8 O.D.	7/8 O.D.

NOTES:
1. Coil connections are sweat



Unit shown with optional bottom return air kit

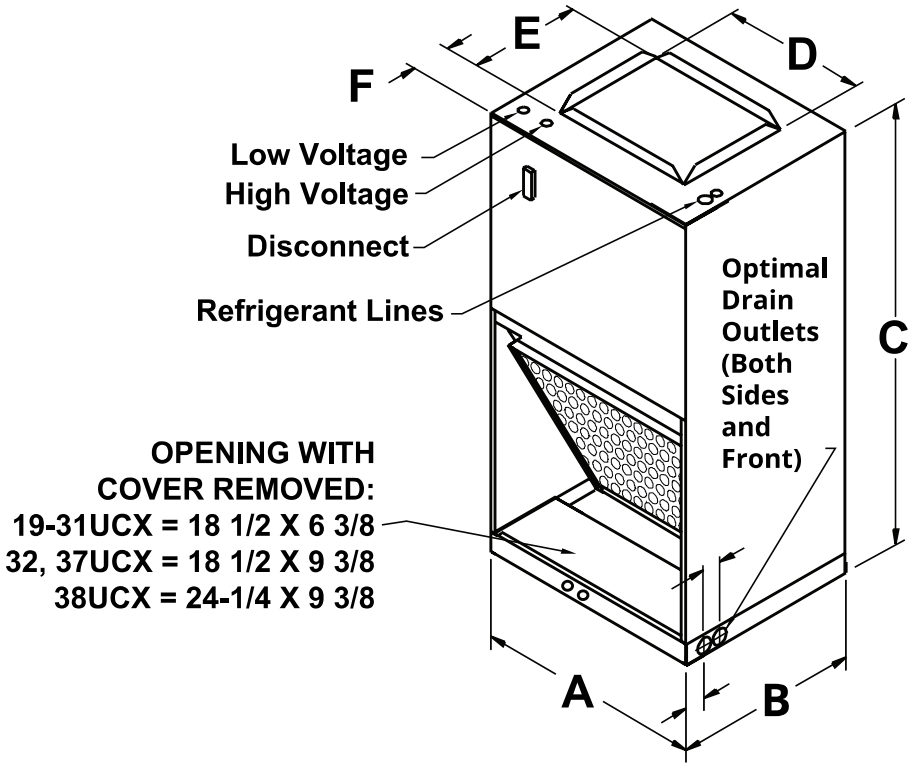

ACCESSORIES

OPTIONAL ACCESSORIES (ALL FIELD INSTALLED)								
DESCRIPTION	PART #						DIMENSIONS	
	19-31UCX		32-37UCX		38UCX		(OUTSIDE FRAME)	(INSIDE FRAME)
	LOUVERED	SOLID	LOUVERED	SOLID	LOUVERED	SOLID		
WALL PANEL (1)	9PWUC01L	9PWUC01S	9PWUC02L	9PWUC02S	9PWUC04L	9PWUC04S	43-3/8 X 25-5/8 46-3/8 X 25-5/8 52-1/2 X 31-5/8	40-3/8 X 22-5/8 43-3/8 X 22-5/8 49-1/2 X 28-5/8
HANGER BRKT SET	90PK3		90PK3		90PK31		1-3/4 X 22-1/8 1-3/4 X 27-15/16	- - -
BOTTOM RETURN AIR KIT	90PK4		90PK5		90PK51		19-13/16 X 22 20-7/16 X 22 20-5/8 X 28	- - -
3kW HEATER KIT (2)	9EHUC1-203 (2)		9EHUC2-203 (2)		9EHUC2-203 (2)		- - -	- - -
5kW HEATER KIT (2)	9EHUC1-205 (2)		9EHUC2-205 (2)		9EHUC2-205 (2)			
6kW HEATER KIT (2)	9EHUC1-206 (2)		9EHUC2-206 (2)		9EHUC2-206 (2)			
8kW HEATER KIT (2)	9EHUC1-208 (2)		9EHUC2-208 (2)		9EHUC2-208 (2)			
10kW HEATER KIT (2)	9EHUC1-210 (2)		9EHUC2-210 (2)		9EHUC2-210 (2)			
CONDENSATE OVERFLOW KIT	SS3		SS3		SS3		- - -	- - -

NOTES:
1. Dimensions for wall panels are the outside of the panels. Inside "Opening" dimensions are approximately 3" less than shown.
2. Heater kits are only approved for installation in the "0-HK" models. Heater kits are not approved for UCX units that already contain factory installed heaters.



Condensate Drain Connections
(With drain cover removed)
(Male connections shown)



Optional Wall Panel
Recessed wall application



#SS3
Condensate Overflow Switch

OPTIONAL FEATURES

Optional features include wall panels with captive screws, condensate overflow switch, closet hanger bracket kit, and bottom return air kit.

Unique Feature - In recessed wall applications utilizing the optional wall panel, the hot water coil can be removed without modifications to the drywall. To allow this feature, the top of the **UCXW** cabinet is notched for coil removal and the wall panel is 3" taller than the cabinet.

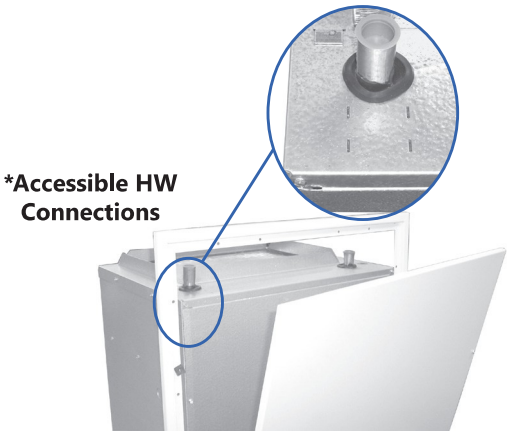

Unit Shown with Optional Louvered Wall Panel
Recessed wall application

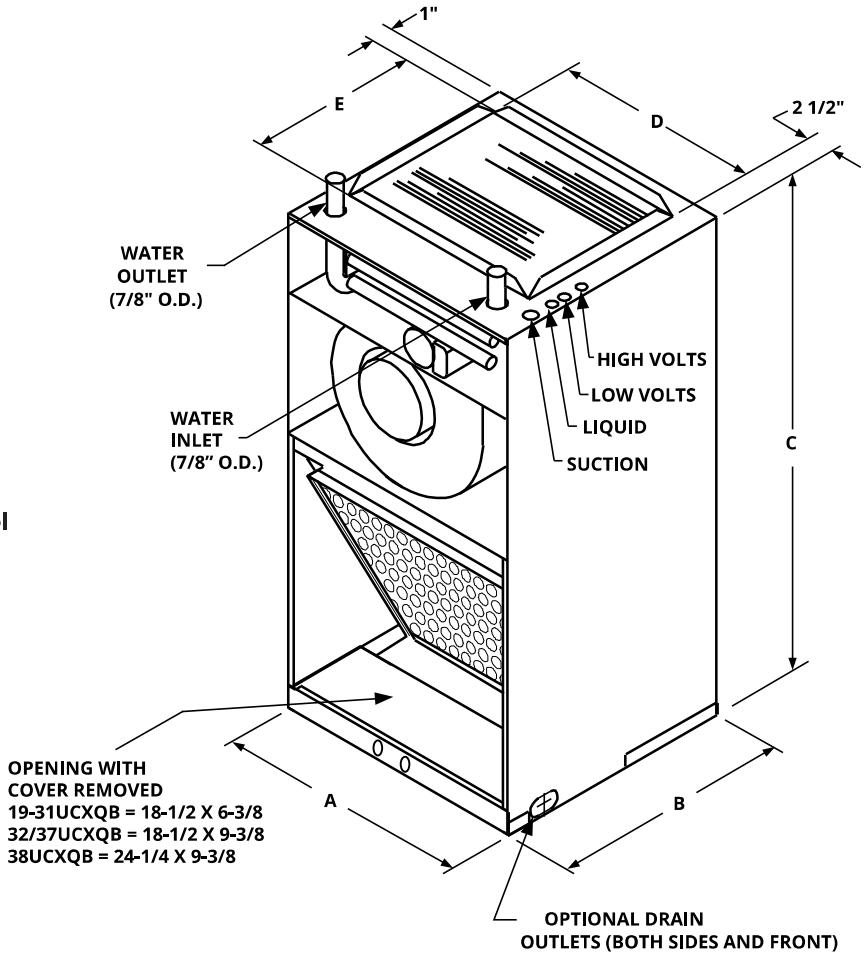

PHYSICAL DIMENSIONS								
UNIT MODEL	A	B	C	D	E	FILTER SIZE	LIQUID LINE	SUCTION LINE
12-25UCX-HW	22-1/8	18	43	18	12-1/2	18 X 18	3/8" O.D.	5/8" O.D.
26/31UCX-HW	22-1/8	18	43	18	12-1/2	18 X 20	3/8" O.D.	3/4" O.D.
32/37UCX-HW	22-1/8	21	43	18	15-1/2	18 X 24	3/8" O.D.	3/4" O.D.
38UCX-HW	28-1/8	21	46	24-1/8	15-3/4	24 X 24	3/8" O.D.	7/8" O.D.

NOTES:
1. All coil connections are sweat

PERFORMANCE DATA								
UNIT MODEL	NOMINAL COOLING BTUH	P.D. FT. WTR. COIL ONLY	HEATING BTUH (1000) AT ENTERING WATER TEMPERATURE Delta-T 20°F & GPM					
			120°F	GPM	140°F	GPM	180°F	GPM
12UCXW	12,000	3.3	11.4	1.1	16.0	1.6	25.1	2.5
		2.1	11.1	1.1	15.6	1.6	24.5	2.5
		1.2	10.8	1.1	15.1	1.5	23.7	2.4
19/20UCXW	18,000	3.3	19.1	1.9	26.8	2.7	42.1	4.2
		2.1	18.5	1.9	25.9	2.6	40.7	4.1
		1.2	17.6	1.8	24.9	2.5	38.7	3.9
25/26UCXW	24,000 / 18,000	3.3	22.9	2.3	32.1	3.2	50.4	5.0
		2.1	22.1	2.2	31.0	3.1	48.7	4.9
		1.2	20.8	2.1	29.2	2.9	45.9	4.6
31UCXW	30,000 / 24,000	3.3	26.1	2.6	36.5	3.7	57.3	5.7
		2.1	25.0	2.5	35.1	3.5	55.1	5.5
		1.2	23.5	2.4	32.9	3.3	51.7	5.2
32UCXW	30,000 / 24,000	3.6	28.1	2.8	39.3	3.9	61.7	6.2
		2.4	26.9	2.7	37.7	3.8	59.2	5.9
		1.3	25.2	2.5	35.3	3.5	55.4	5.5
37UCXW	36,000 / 30,000	3.6	30.9	3.1	43.2	4.3	67.9	6.8
		2.4	29.6	3.0	41.3	4.1	64.9	6.5
		1.3	27.5	2.8	38.5	3.9	60.5	6.1
38UCXW	36,000 / 30,000	3.1	33.8	3.4	47.4	4.7	74.4	7.4
		1.7	32.3	3.2	45.3	4.5	71.1	7.1
		0.8	30.0	3.0	42.1	4.2	66.1	6.6

NOTES:
1. Heating output will not exceed output of hot water source.
2. Approved for installation with 0" clearance to combustible materials.
3. Contact factory for correct matches with outdoor unit.
(1) Heat BTUH is at 70°F entering air temperature. Based on 20°F Delta-T. Velocity not to exceed 4ft./sec.
Based on 20°F Delta-T. Velocity not to exceed 4ft./sec.

MOTOR SPEED TAP CONNECTION			
UNIT MODEL	NOM. COOLING BTUH	HIGH SPD (VIO LEAD)	LOW SPD (GRY LEAD)
12UCXW	12,000	GRY	VIO
19/20UCXW	18,000	2	1
25/26UCXW	18,000	2	1
	24,000	3	2
31/32UCXW	24,000	2	1
	30,000	3	2
37/38UCXW	30,000	2	1
	36,000	3	2

BLOWER DATA														
UNIT MODEL	MOTOR H.P. (120V)	MOTOR AMPS (120V)	BHP	RUNNING AMPS	SPEED TAP	MCA	MOP	CFM vs. EXTERNAL STATIC PRESSURE						
								0.10	0.15	0.20	0.25	0.30	0.40	0.50
12UCXW	1/4	3.5	.11	1.6	WHT	5	15	575	555	540	525	505	465	425
			.09	1.3	GRY			525	505	490	470	450	405	360
			.04	0.5	VIO			300	275	250	225	200	155	---
19/20UCXW	1/3	4.8	.24	3.0	3	6	15	690	675	660	645	630	600	570
			.21	2.6	2			650	630	610	590	570	540	510
			.16	1.7	1			530	510	490	470	450	420	390
25/26UCXW	1/2	6.8	.36	4.1	3	9	15	880	865	850	835	820	790	760
			.23	2.4	2			670	655	640	625	610	580	550
			.17	1.7	1			570	550	530	515	500	470	440
31UCXW	1/2	6.8	.50	5.1	3	9	15	930	910	890	870	850	810	760
			.34	3.6	2			800	785	770	750	730	700	690
			.22	2.1	1			610	595	580	565	550	510	480
32UCXW	3/4	8.4	.37	4.2	3	11	15	1010	1000	990	975	960	930	900
			.24	2.6	2			790	775	760	745	730	700	670
			.20	2.0	1			700	685	670	650	630	600	560
37UCXW	3/4	8.4	.75	6.7	3	11	15	1250	1230	1210	1190	1170	1120	1070
			.49	5.5	2			1110	1095	1080	1065	1050	1020	990
			.37	4.0	1			940	925	910	895	880	850	820
38UCXW	3/4	8.4	.47	5.6	3	11	15	1240	1230	1220	1205	1190	1160	1130
			.38	5.2	2			1100	1090	1080	1065	1050	1020	990
			.25	2.3	1			860	845	830	815	800	760	730

NOTES:

1. Add nominal .05 static when optional wall panel is used.
2. Shaded rows are factory preset speeds.
3. Add .05 static if wall panel is used.

ACCESSORIES

ALL UCXW OPTIONAL ACCESSORIES (FIELD INSTALLED)				
DESCRIPTION	**PART NO.**	**FOR**	**DIMENSIONS**	
WALL PANEL (1)	9PWUC03L 9PWUC04L	12-37UCXW 38UCXW	49-3/8 X 25-5/8 52-1/2 X 31-5/8 (Outside Frame)	46-3/8 x 22-5/8 49-1/2 X 28-5/8 (Inside Frame)
CLOSET BRKT.	90PK3 90PK31	12-37UCXW 38UCXW	1-3/4 X 22-1/8 1-3/4 X 27-15/16	---
BOTTOM RETURN AIR KIT	90PK5 90PK51	12-37UCXW 38UCXW	20-7/16 X 22 20-5/8 X 28	---
CONDENSATE OVERFLOW SWITCH	SS3	ALL UCXW	---	---
FREEZE (2) PROTECTOR	941-1	ALL UCXW	---	---

NOTES:
(1) Wall panels are taller than the UCXW cabinet to allow access to hot water coil connections.
(2) Energizes the pump if HW coil temperature falls below 40°·



Optional Wall Panel
Recessed Wall Application



#SS3
Condensate Overflow Switch



Condensate Drain Connections
(With drain cover removed)
(Male connections shown)



Unit Shown with Optional
Bottom Return Air Kit



Unit Shown with
Front Panel Removed

UCXRX

The **UCXRX** series air handlers are designed specifically for use with tankless water heaters. These air handlers allow high efficiency tankless water heaters to be used for two jobs instead of one, providing domestic hot water and high efficiency space heating! They are compatible with most of today's higher efficiency split-system heat pumps and condensing units.

These air handlers can be installed on a closet platform, hung on a closet wall, or recessed in a wall between the studs.

Important: In order for the **UCXRX's** to operate properly with tankless water heaters, the hot water coils must be piped to the tankless heaters according to the tankless manufacturer's instructions. Contact the water heater manufacturer for required accessories and piping requirements, as well as water heater sizing information.

The **UCXRX** air handlers include a high efficiency standard ECM motor, special circulating pump designed for tankless heaters, HW check valve, air purge valve, hot water coil, cooling coil, and multi-function circuit board.

These fan coils are compatible with any source of hot water that does not exceed 180° and is NSF/ANSI certified for use with domestic water.

Compatible with R410A *(for servicing existing equipment only)*, R454B and R32 using non-bleed TXVs. Units ordered for R454B and R32 (Options B and C) are factory configured with TXV or Piston and factory mounted refrigerant sensor.

Field convertible units (Option Z) are available which can be field configured with TXV and refrigerant sensor kit.



Standard Unit
Closet application - Front Return Air

First Co.'s customer is ultimately responsible for confirming which fan coil models are compatible with selected outdoor unit(s) and which expansion valves (if any) are required. To determine certified indoor/outdoor combinations, go to www.firstco.com or contact the factory.

OPTIONAL FEATURES

Unique New Feature - In recessed wall applications utilizing the optional wall panel, the hot water coil can be removed without modifications to the drywall. To allow this feature, the top of the **UCXRX** cabinet is notched for coil removal and the wall panel is 3" taller than the cabinet.

Optional features include Wall Panels with Captive Screws, Condensate Overflow Switch, Closet Hanger Bracket Kit, and Bottom Return Air Kit.



Unit shown with optional bottom return air kit

PERFORMANCE DATA

UNIT MODEL	NOMINAL CFM	HEATING GPM (NOM.)	HEATING BTUH (1000) AT ENTERING WATER TEMPERATURE (1) Delta-T 20°F & GPM										TOTAL AMPS (MOTOR) (120V)	TOTAL AMPS (PUMP) (120V)	MIN CIRCUIT AMPACITY	MAX CIRCUIT PROTECTION
			120°F	GPM	130°	GPM	140°F	GPM	150°F	GPM	160°F	GPM				
12UCXRX	275	4	11.3	1.1	13.6	1.4	15.9	1.4	18.1	1.8	20.4	2.0	3.5	.84	6	15
19/20UCXRX	450	4	15.6	1.6	18.8	1.9	21.9	1.9	25.0	2.5	28.2	2.8	4.8	.84	7	15
25/26UCXRX	610	4	19.1	1.9	22.9	2.3	26.7	2.3	30.5	3.1	34.3	3.4	6.8	.84	10	15
31UCXRX	730	4	21.3	2.1	25.6	2.6	29.9	2.6	34.2	3.4	38.5	3.9	6.8	.84	10	15
32UCXRX	730	4	22.7	2.3	27.3	2.7	31.8	2.7	36.3	3.6	40.9	4.1	8.4	.84	12	15
37UCXRX	1050	4	28.3	2.8	34.0	3.4	39.7	3.4	45.4	4.5	51.1	5.1	8.4	.84	12	15
38UCXRX	1050	4	30.6	3.1	36.7	3.7	42.8	3.7	48.9	4.9	55.0	5.5	8.4	.84	12	15

NOTES:
(1) Heat BTUH is at 70°F entering air temperature.
(2) Based on 20°F Delta-T. Velocity not to exceed 4ft./sec.
(3) Heat BTUH output will not exceed output of water source.

BLOWER DATA												
UNIT MODEL	MOTOR H.P. (120V)	MOTOR AMPS (120V)	BHP	RUNNING AMPS	SPEED TAP	CFM vs. EXTERNAL STATIC PRESSURE						
						0.10	0.15	0.20	0.25	0.30	0.40	0.50
12UCXRX	1/4	3.5	.11	1.6	WHT	575	555	540	525	505	465	425
			.09	1.3	GRY	525	505	490	470	450	405	360
			.04	0.5	VIO	300	275	250	225	200	155	---
19/20UCXRX	1/3	4.8	.24	3.0	3	690	675	660	645	630	600	570
			.21	2.6	2	650	630	610	590	570	540	510
			.16	1.7	1	530	510	490	470	450	420	390
25/26UCXRX	1/2	6.8	.36	4.1	3	880	865	850	835	820	790	760
			.23	2.4	2	670	655	640	625	610	580	550
			.17	1.7	1	570	550	530	515	500	470	440
31UCXRX	1/2	6.8	.50	5.1	3	930	910	890	870	850	810	760
			.34	3.6	2	800	785	770	750	730	700	690
			.22	2.1	1	610	595	580	565	550	510	480
32UCXRX	3/4	8.4	.37	4.2	3	1010	1000	990	975	960	930	900
			.24	2.6	2	790	775	760	745	730	700	670
			.20	2.0	1	700	685	670	650	630	600	560
37UCXRX	3/4	8.4	.75	6.7	3	1250	1230	1210	1190	1170	1120	1070
			.49	5.5	2	1110	1095	1080	1065	1050	1020	990
			.37	4.0	1	940	925	910	895	880	850	820
38UCXRX	3/4	8.4	.47	5.6	3	1240	1230	1220	1205	1190	1160	1130
			.38	5.2	2	1100	1090	1080	1065	1050	1020	990
			.25	2.3	1	860	845	830	815	800	760	730

NOTES:
1. Add nominal .05 static when optional wall panel is used.
2. Shaded rows are factory preset speeds.

UNIT MODEL	NOM. COOLING BTUH	MOTOR SPEED TAP CONNECTION	
		HIGH SPD (VIO LEAD)	LOW SPD (GRY LEAD)
12UCXRX	12,000	VIO	GRY
19/20UCXRX	18,000	2	1
25/26UCXRX	18,000 24,000	2 3	1 2
31/32UCXRX	24,000 30,000	2 3	1 2
37/38UCXRX	30,000 36,000	2 3	1 2

PHYSICAL DIMENSIONS								
UNIT MODEL	A	B	C	D	E	FILTER SIZE	LIQUID LINE	SUCTION LINE
12-25UCXRX	22-1/8	18	43	18	12-1/2	18 X 18	3/8" O.D.	5/8" O.D.
26/31UCXRX	22-1/8	18	43	18	12-1/2	18 X 20	3/8" O.D.	3/4" O.D.
32/37UCXRX	22-1/8	21	43	18	15-1/2	18 X 24	3/8" O.D.	3/4" O.D.
38UCXRX	28-1/8	21	46	24-1/8	15-3/4	24 X 24	3/8" O.D.	7/8" O.D.

NOTE:
1. All coil connections are sweat

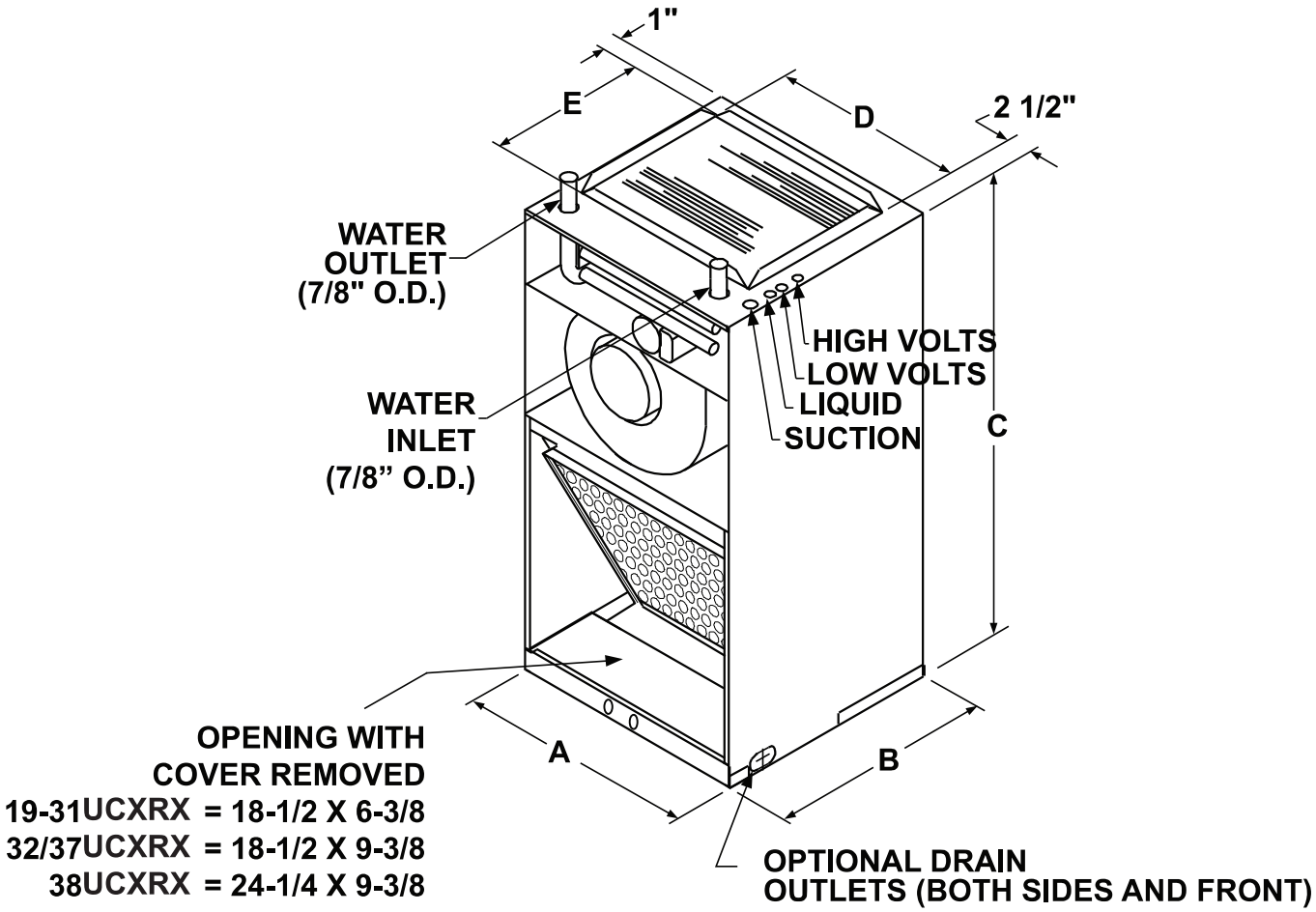

ACCESSORIES

ALL UCXRX OPTIONAL ACCESSORIES (FIELD INSTALLED)				
DESCRIPTION	**PART NO.**	**FOR**	**DIMENSIONS**	
WALL PANEL (1)	9PWUC03L 9PWUC04L	12-37UC(R)X 38UCXRX	49-3/8 X 25-5/8 52-1/2 X 31-5/8 (Outside Frame)	46-3/8 x 22-5/8 49-1/2 X 28-5/8 (Inside Frame)
CLOSET BRKT.	90PK3 90PK31	12-37UCXRX 38UCXW	1-3/4 X 22-1/8 1-3/4 X 27-15/16	---
BOTTOM RETURN AIR KIT	90PK5 90PK51	12-37UCXRX 38UCXRX	20-7/16 X 22 20-5/8 X 28	---
CONDENSATE OVERFLOW SWITCH	SS3	ALL UCXRX	---	---
FREEZE (2) PROTECTOR	941-1	ALL UCXRX	---	---

NOTES:
(1) Wall panels are taller than the UCXW cabinet to allow access to hot water coil connections.
(2) Energizes the pump if HW coil temperature falls below 40°·



Optional Wall Panel
Recessed Wall Application



#SS3
Condensate Overflow Switch



Unit Shown with
Front Panel Removed



Unit Shown with Optional
Bottom Return Air Kit

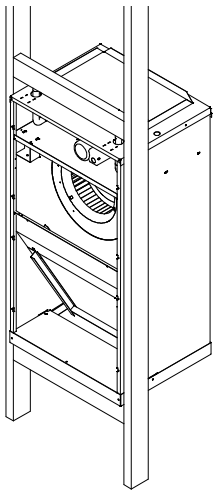

Typical Recessed
Wall Installation

WARNING AVERTISSEMENT ADVERTENCIA
Cancer and Reproductive Harm
Cancer et Troubles de l'appareil reproducteur
Cáncer y Daño Reproductivo
www.P65Warnings.ca.gov
LBY0057

AMERICAN-MADE. FAMILY OWNED.

FIRST CO.
P.O. BOX 270969 - DALLAS, TEXAS 75227
PH. (214) 388-5751 | FAX (214) 388-2255
WWW.FIRSTCO.COM

SEPTEMBER 2024