CAS
Product Specifications

COMMERCIAL SPLIT SYSTEM AIR CONDITIONING CONDENSING UNITS, 6-25 TONS BUILT TO LAST, EASY TO INSTALL AND SERVICE

These dependable outdoor air cooled condensing units match our indoor air-handlers to meet a wide selection of cooling solutions. Our air-cooled air conditioning split systems:

- Provide a logical solution for commercial needs
- Have rugged, dependable construction
- Available with single or dual refrigerant circuits.
- Have cooling capability up to 125°F (52°C) ambient and down to 35°F (2°C) ambient standard

CAS072-153

CAS181-303

Constructed for long life

Our single circuit and dual circuit, air cooled condensing units are designed and built to last. The high efficiency design outdoor coil construction allows for a more efficient design in a smaller cabinet size that utilizes an overall reduction in refrigerant charge. Where conditions require, special coil coating coil protection option is available. Cabinets are constructed of pre-painted galvanized steel, delivering unparalleled protection from the environment. Inside and outside surfaces are protected to ensure long life, good looks, and reliable operation. Safety controls are used for enhanced system protection and reliability. Each unit utilizes the Comfort Alert™ diagnostic and troubleshooting control system. This protects the units operation and provides valuable diagnostic information when required.

Easier installation and service

The multipoise design and component layout ensures quick unit installation and operation. Units can be converted from horizontal to vertical operation by simply repositioning the unit. Drain pan connections are duplicated on both sides of the unit. The filters, motor, drive, TXVs, and coil connections are all easily accessed by removing a single side panel.

Efficient operation

These air cooled condensing units will provide EERs up to 12.0 (tested in accordance with AHRI standard 340/360). This high efficiency operation will help reduce overall operating cost and energy consumption.

Controls for performance dependability

The CAS condensing units offer operating controls and components designed for performance dependability. The high efficiency hermetic scroll compressor is engineered for long life and durability. The compressors include vibration isolation for quiet operation. The high-pressure switch protects the entire refrigeration system from abnormally high operating pressures. A low-pressure switch protects the system from loss of charge. These units also include anti-short-cycling protection, which helps to protect the units against compressor failure.

All units include a crankcase heater to eliminate liquid slugging at start-up. Each unit comes standard with the Comfort Alert control system. This provides:

- System Go LED indicator
- Compressor fault LED indicator
- Phase reversal protection
- Anti-short cycle protection
- Fault LED indicator
- Phase loss protection
- Safety pressure indicator

Our innovative FAS/FAX packaged air handlers are custom matched to CAS condensing units.

Information on matching FAS/FAX DX packaged air handler follows for convenience. See separate product data for more details. The FAS/FAX Series has excellent fan performance, efficient direct-expansion (DX) coils, a unique combination of indoor-air quality features, and is easy to install. Its versatility and state-of-the-art features help to ensure economical performance of the split system both now and in the future.

Table of contents

	PAGE
FEATURES/BENEFITS	2
MODEL NUMBER NOMENCLATURE	3
AHRI RATINGS	5
PHYSICAL DATA	6
BASE UNIT DIMENSIONS	10
CAS/FAS-FAX OPTIONS AND ACCESSORIES	14
TYPICAL PIPING AND WIRING DIAGRAMS	17
PERFORMANCE DATA	31
ELECTRICAL DATA	64
APPLICATION DATA	67
GUIDE SPECIFICATIONS	68

Features/Benefits

Factory-installed options (FIOPs)

Certified and pre-engineered factory-installed options (FIOPs) allow units to be installed in less time, thereby reducing installed cost.

FIOPs include:

- low ambient controls which provide cooling operation down to –20°F (–29°C) ambient temperatures
- non-fused disconnect
- special coil coating coil protection
- louvered hail guard

Indoor-air quality (IAQ) features

The unique combination of features in the FAX/FAS Series air handlers ensures that clean, fresh, conditioned air is delivered to the occupied space. Cooling coils prevent the build-up of humidity in the room, even during part-load conditions. Unit sizes 10 tons and above feature dual-circuit face-split coils. 2 in. (51 mm) disposable filters remove dust and airborne particles from the occupied space. Pitched drain pan can be adjusted for a right-hand or left-hand connection to provide positive drainage and prevent standing condensate.

Economizer accessory precisely controls the blend of outdoor air and room air to achieve comfort levels. When the outside air is suitable, outside air dampers can fully open to provide “free” cooling. Economizer is an Ultra Low Leak design that includes return and outside air damper leakage that meets California Title 24 section 140.4 requirements. Controller meets California Title 24 Section 120.2 Fault Detection and Diagnostic (FDD) requirements.

Economy

The FAX/FAS packaged air handlers have low initial costs, and they continue to save money by providing reduced installation expense and energy-efficient performance.

Quick installation is ensured by the multi-position design. Units can be installed in either the horizontal or vertical (upflow) configuration without modifications. All units have drain-pan connections on both sides, and pans can be pitched for right-hand or left hand operation with a simple adjustment.

Fan motors and contactors are pre-wired and TXVs are factory-installed on FAX/FAS models.

High-efficiency, precision balanced fans minimize air turbulence, surging, and unbalanced operation, thereby cutting operating expenses.

Rugged dependability

Die-formed galvanized steel panels ensure structural integrity under all operating conditions. Mechanically bonded coil fins provide improved heat transfer. For FAS units, galvanized steel fan housings are securely mounted to a die-formed galvanized steel deck. Rugged pillow-block bearings (FAS) are securely fastened to the solid steel fan shaft with split collets and clamp locking devices. FAX units have spider-type bearings.

The accompanying air handling unit has thermal insulation containing an immobilized anti-microbial agent to inhibit the growth of bacteria and fungi on the insulation.

Coil flexibility

FAX/FAS air handling units have galvanized steel casings; inlet and outlet connections are on the same end.

Direct-expansion (DX) coils are designed for use with R-410A refrigerant and have copper tubes mechanically bonded to aluminum sine-wave fins. DX coils include matched, factory-installed thermostatic expansion valves (TXVs) with matching distributor nozzles.

Model number nomenclature

CAS072-153 Model Number Nomenclature

MODEL SERIES	C	A	S	0	9	1	H	G	A	0	A	0	0	A
Position Number	1	2	3	4	5	6	7	8	9	10	11	12	13	14

C = R-410A Condensing Unit

A = Air Conditioning (Cooling Only) — Type

S = Standard Efficiency — Efficiency

072 = 6 Tons (2 stages)
091 = 7.5 Tons (2 stages)
121 = 10 Tons (2 stages)
123 = 10 Tons (3 stages)
151 = 12.5 Tons (2 stages)
153 = 12.5 Tons (3 stages)
— Nominal Cooling Capacity

H = 208/230-3-60
L = 460-3-60
S = 575-3-60
— Voltage

G = Single Circuit / Dual Stage (072/091 only)
H = Single Circuit / Dual Stage with Low Ambient Controller (072/091 only)
M = Single Circuit / Dual Stage (121/151 only)[1]
N = Single Circuit with Low Ambient Controller (121/151 only)[1]
T = Dual Circuit (123/153 only)
U = Dual Circuit with Low Ambient Controller (123/153 only)
— Refrigerant Options

A = Al/Cu
B = Precoat Al/Cu
C = E−Coat Al/Cu
E = Cu/Cu
M = Al/Cu with Louvered Hail Guards
N = Precoat Al/Cu with Louvered Hail Guards
P = E−Coat Al/Cu with Louvered Hail Guards
R = Cu/Cu with Louvered Hail Guards
— Coil Options

0 = None
1 = Un-powered Convenience Outlet
2 = Powered Convenience Outlet
— Service Options

A = None
C = Non-Fused Disconnect
— Electrical Options

0 = Electro-Mechanical Controls (standard)
— Base Unit Controls

0 = Not Used
— Not Used

A = Standard
B = LTL (includes full corrugated sleeve wrapped around unit perimeter and full corrugated top cover)
— Packaging

[1] CAS121/151 models with M/N in the 8th digit meet Department of Energy (DOE) 2023 IEER requirements.

Model number nomenclature (cont)

CAS181-303 Model Number Nomenclature

MODEL SERIES	C	A	S	1	8	1	H	A	A	0	A	0	0	A
Position Number	1	2	3	4	5	6	7	8	9	10	11	12	13	14

Type

C = R-410A Condensing Unit

A = Air Conditioning (Cooling Only)

Efficiency

S = Standard ASHRAE 90.1-2016

Nominal Cooling Capacity

181 = 180,000 BTUH = 15 Tons (1 circuit)
183 = 180,000 BTUH = 15 Tons (2 circuit)
241 = 240,000 BTUH = 20 Tons (1 circuit)
243 = 240,000 BTUH = 20 Tons (2 circuit)
303 = 300,000 BTUH = 25 Tons (2 circuit)

Voltage

H = 208/230-3-60
L = 460-3-60
S = 575-3-60

Refrigerant System Options

A = Single Circuit[1]
B = Single Circuit with Low Ambient Control[1]
T = Dual Circuit, 3 Stage[2]
U = Dual Circuit, 3 Stage with Low Ambient Control[2]

Condenser Coil Options

A = Al/Cu Round Tube Plate Fin (RTPF) Coil
B = Pre-Coat Al/Cu RTPF Coil
C = E-Coat Al/Cu RTPF Coil
E = Cu/Cu RTPF Coil
M = Al/Cu RTPF Coil with Louvered Hail Guards
N = Pre-Coat Al/Cu RTPF Coil with Louvered Hail Guards
P = E-Coat Al/Cu RTPF Coil with Louvered Hail Guards
R = Cu/Cu RTPF Coil with Louvered Hail Guards

Service Options

0 = None
1 = Non-powered 115v Convenience Outlet
2 = Powered Convenience Outlet

Electrical Options

A = None
C = Non-Fused Disconnect Switch

Base Unit Controls

0 = Standard Electromechanical Controls

Future Use

0 = No options, reserved for future use

Packaging

A = Standard
B = LTL

[1] Only available on sizes 181 and 241.
[2] Only available on sizes 183, 243, and 303.

AHRI ratings

AHRI Capacity Ratings[a,b]

UNIT	COOLING STAGES	NOMINAL CAPACITY (tons)	NET COOLING CAPACITY (MBH)	TOTAL POWER (kW)	EER	IEER WITH 2-SPEED VFD
CAS072/FAX072	2	6	70.0	5.8	12.0	15.5
CAS091/FAX091	2	7.5	92.0	8.2	11.2	15.5
CAS121/FAX120	2	10	117.0	10.4	11.2	15.5
CAS151/FAS150	2	12.5	135.0	12.3	11.0	15.5
CAS181/FAS180	2	15	184.0	16.4	11.2	14.3
CAS241/FAS240	2	20	240.0	21.8	11.0	13.6
CAS123/FAX120	3	10	117.0	10.4	11.2	14.9
CAS153/FAS150	3	12.5	135.0	12.3	11.0	14.2
CAS183/FAS180	3	15	184.0	16.7	11.0	14.2
CAS243/FAS240	3	20	240.0	22.6	10.6	13.5
CAS303/FAS300	3	25	278.0	26.2	10.6	13.2

NOTE(S):
a. Rated in accordance with AHRI Standard 340/360, as appropriate.
b. Ratings are based on:
Cooling Standard: 80°F (27°C) db, 67°F (19°C) wb indoor air temp and 95°F (35°C) db outdoor air temp.

LEGEND

AHRI — Air Conditioning, Heating, and Refrigeration
ASHRAE — American Society of Heating, Refrigeration, and Air-Conditioning, Inc.
EER — Energy Efficiency Ratio
IEER — Integrated Energy Efficiency Ratio

Sound Power Levels, dB

UNIT	COOLING STAGES	A-WEIGHT OCTAVE OUTDOOR SOUND (dB)[a]								
		TOTAL	63	125	250	500	1000	2000	4000	8000
CAS072	2	84.6	63.1	68.9	73.4	79.5	80.2	76.4	72.0	64.9
CAS091	2	84.6	63.1	68.9	73.4	79.5	80.2	76.4	72.0	64.9
CAS121	2	83.2	60.4	65.8	77.1	76.8	77.1	75.8	70.2	64.7
CAS123	3	83.8	62.9	69.6	74.4	77.9	79.3	76.1	70.7	61.1
CAS151	2	82.6	60.5	65.1	70.3	77.2	78.0	75.4	71.2	63.9
CAS153	3	85.2	64.8	68.9	71.4	82.8	79.0	74.2	69.0	61.9
CAS181	2	84.2	60.1	69.7	72.8	78.7	79.5	76.3	72.9	67.8
CAS183	3	82.8	55.5	64.8	73.6	77.2	78.2	74.8	70.7	64.3
CAS241	2	82.6	60.5	65.1	70.3	77.2	78.0	75.4	71.2	63.9
CAS243	3	85.2	64.8	68.9	71.4	82.8	79.0	74.2	69.0	61.8
CAS303	3	88.2	67.8	71.9	74.4	85.8	82.0	77.2	72.0	64.8

NOTE(S):
a. Outdoor sound data is measured in accordance with AHRI standard 270-2008.

LEGEND

dB — Decibel

Physical data

CAS072/091/121/151 Single Circuit Models — Physical Data

UNIT	CAS072	CAS091	CAS121	CAS151
NOMINAL CAPACITY (tons)	6	7.5	10	12.5
OPERATING WEIGHT (lb)	389	430	490	598
Refrigeration System				
No. Circuits / No. Comp. / Type	1 / 1 / Scroll	1 / 1 / Scroll	1 / 1 / Scroll	1 / 2 / Scroll
Refrigerant Type	R-410A	R-410A	R-410A	R-410A
R-410A Shipping Charge A/B (lb)	9.0	9.0	9.0	9.0
System Charge w/ Fan Coil[a]	14.0	19.0	22.0	34.2
Metering Device	TXV	TXV	TXV	TXV
High-press. Trip / Reset (psig)	630 / 505	630 / 505	630 / 505	630 / 505
Low-press. Trip / Reset (psig)	54 / 117	54 / 117	54 / 117	54 / 117
Compressor				
Oil Charge A/B (oz)	56	58	85	84
Speed (rpm, 60 Hz)	3500	3500	3500	3500
Condenser Coil				
Material	Al/Cu	Al/Cu	Al/Cu	Al/Cu
Coil type	RTPF	RTPF	RTPF	RTPF
Rows / FPI	2 / 17	2 / 17	2 / 17	3 / 17
Total Face Area (ft^2)	17.5	23.0	25.1	31.8
Condenser Fan / Motor				
Qty / Motor Drive Type	2 / direct	2 / direct	2 / direct	2 / direct
Motor Hp / rpm	1/4 / 1100	1/4 / 1100	1/4 / 1100	1/4 / 1100
Fan Diameter (in.)	22	22	22	22
Nominal Airflow (cfm)	6,000	6,000	6,000	6,000
Watts (total)	610	610	610	610
Piping Connections				
Qty / Suction (in. ODS)	1 / 1-1/8	1 / 1-1/8	1 / 1-3/8	1 / 1-3/8
Qty / Liquid (in. ODS)	1 / 3/8	1 / 1/2	1 / 1/2	1 / 5/8

NOTE(S):
a. Approximate system charge with about 25 ft piping of sizes indicated with matched FAX or FAS.

CAS123/153 Two Circuit Models — Physical Data

UNIT	CAS123	CAS153
NOMINAL CAPACITY (tons)	10	12.5
OPERATING WEIGHT (lb)	516	654
Refrigeration System		
No. Circuits / No. Comp. / Type	2 / 2 / Scroll	2 / 2 / Scroll
Refrigerant Type	R-410A	R-410A
R-410A Shipping Charge A/B (lb)	9.0 / 9.0	9.0 / 9.0
System Charge w/ Fan Coil[a]	11.9 / 13.1	16.2 / 16.1
Metering Device	TXV	TXV
High-press. Trip / Reset (psig)	630 / 505	630 / 505
Low-press. Trip / Reset (psig)	54 / 117	54 / 117
Compressor		
Oil Charge A/B (oz)	42 / 42	56 / 56
Speed (rpm, 60 Hz)	3500	3500
Condenser Coil		
Material	Al/Cu	Al/Cu
Coil type	RTPF	RTPF
Rows / FPI	2 / 17	3 / 17
Total Face Area (ft^2)	31.8	31.8
Condenser Fan / Motor		
Qty / Motor Drive Type	2 / direct	2 / direct
Motor Hp / rpm	1/4 / 1100	1/4 / 1100
Fan Diameter (in.)	22	22
Nominal Airflow (cfm)	6,000	6,000
Watts (total)	610	610
Piping Connections		
Qty / Suction (in. ODS)	2 / 1-1/8	2 / 1-3/8
Qty / Liquid (in. ODS)	2 / 3/8	2 / 1/2

NOTE(S):
a. Approximate system charge with about 25 ft piping of sizes indicated with matched FAX or FAS.

Physical data (cont)

CAS181/241 Physical Data

UNIT	CAS181	CAS241
NOMINAL CAPACITY (tons)	15	20
OPERATING WEIGHT (lb)	731	978
Refrigeration System		
No. Circuits / No. Comp. / Type	1 / 2 / Scroll	1 / 2 / Scroll
Refrigerant Type	R-410A	R-410A
R-410A Shipping Charge A/B (lb)	9.0	9.0
System Charge w/ Fan Coil[a]	43.0	38.0
Metering Device	TXV	TXV
High-press. Trip / Reset (psig)	630 / 505	630 / 505
Low-press. Trip / Reset (psig)	54 / 117	54 / 117
Compressor		
Oil Charge A/B (oz)	60 / 60	110 / 110
Speed (rpm, 60 Hz)	3500	3500
Condenser Coil		
Material	Al/Cu	Al/Cu
Coil type	RTPF	RTPF
Rows / FPI	2 / 17	2 / 17
Total Face Area (ft^2)	23.5 x 2	25.0 x 2
Condenser Fan / Motor		
Qty / Motor Drive Type	3 / direct	4 / direct
Motor Hp / rpm	1/4 / 1100	1/4 / 1100
Fan Diameter (in.)	22	22
Nominal Airflow (cfm)	9,000	12,000
Watts (total)	970	1150
Piping Connections		
Qty / Suction (in. ODS)	1 / 1-3/8	1 / 1-5/8
Qty / Liquid (in. ODS)	1 / 5/8	1 / 5/8

NOTE(S):
a. Approximate system charge with about 25 ft piping of sizes indicated with matched FAS.

CAS183/243/303 Physical Data

UNIT	CAS183	CAS243	CAS303
NOMINAL CAPACITY (tons)	15	20	25
OPERATING WEIGHT (lb)	731	978	978
Refrigeration System			
No. Circuits / No. Comp. / Type	2 / 2 / Scroll	2 / 2 / Scroll	2 / 2 / Scroll
Refrigerant Type	R-410A	R-410A	R-410A
R-410A Shipping Charge A/B (lb)	9.0 / 9.0	9.0 / 9.0	9.0 / 9.0
System Charge w/ Fan Coil[a]	20.4 / 22.4	20.90 / 20.55	24.17 / 25.80
Metering Device	TXV	TXV	TXV
High-press. Trip / Reset (psig)	630 / 505	630 / 505	630 / 505
Low-press. Trip / Reset (psig)	54 / 117	54 / 117	54 / 117
Compressor			
Oil Charge A/B (oz)	60 / 60	110 / 110	110 / 110
Speed (rpm, 60 Hz)	3500 / 2900	3500 / 2900	3500 / 2900
Condenser Coil			
Material	Al/Cu	Al/Cu	Al/Cu
Coil type	RTPF	RTPF	RTPF
Rows / FPI	2 / 17	2 / 17	2 / 17
Total Face Area (ft^2)	23.5 x 2	25.0 x 2	25.0 x 2
Condenser fan / motor			
Qty / Motor Drive Type	3 / direct	4 / direct	4 / direct
Motor Hp / rpm	1/4 / 1100	1/4 / 1100	1/4 / 1100
Fan Diameter (in.)	22	22	22
Nominal Airflow (cfm)	9,000	12,000	12,000
Watts (total)	970	1150	1150
Piping Connections			
Qty / Suction (in. ODS)	2 / 1-3/8	2 / 1-3/8	2 / 1-3/8
Qty / Liquid (in. ODS)	2 / 1/2	2 / 1/2	2 / 1/2

NOTE(S):
a. Approximate system charge with about 25 ft piping of sizes indicated with matched FAS.

Physical data (cont)

CAS Piping Recommendations (Single-Circuit)

MODEL & NOMINAL CAPACITY	LINEAR LINE (FT)	0 - 24	25 - 49		50 - 74		75 - 99		100 - 124		125 - 149		150 - 174		175 - 200	
	EQUIV. LINE (FT)	0 - 37	38 - 74		75 - 112		113 - 149		150 - 187		188 - 224		225 - 262		263 - 300	
CAS072 TC 68.5, SC 5.57°F	Liquid Line Size (in.)	3/8	3/8	1/2	1/2	5/8	1/2	5/8	1/2	5/8	1/2	5/8	1/2	5/8	1/2	5/8
	Liquid PD (F)	2.0	4.0	0.7	1.1	0.3	1.4	0.4	1.8	0.5	2.1	0.6	2.5	0.7	2.8	0.8
	Max Lift (ft)	18	7	34	31	39	44	57	41	57	35	54	31	53	27	52
	Max Lift PD (F)	3.5	4.6	3.5	3.5	3.5	5.0	5.0	5.0	5.0	4.9	5.0	5.0	5.0	5.0	5.0
	Suction Line Size (in.)	7/8	7/8	1-1/8	7/8	1-1/8	7/8	1-1/8	7/8	1-1/8	1-1/8		1-1/8		1-1/8	
	Suction Ln PD (F)	0.9	1.8	0.5	2.7	0.8	3.6	1.0	4.5	1.3	1.6		1.8		2.1	
	Charge (lb)	10.8	11.8	13.7	15.2	18.5	16.9	21.3	18.7	24.2	21.4	27.1	23.4	30.0	25.3	32.8
	#/TR	1.90	2.07	2.41	2.67	3.25	2.97	3.74	3.28	4.25	3.8	4.75	4.1	5.26	4.4	5.75
CAS091 TC 92.0, SC 11.3°F	Liquid Line Size (in.)	1/2	1/2	5/8	1/2	5/8	1/2	5/8	1/2	5/8	1/2	5/8	1/2	5/8	1/2	5/8
	Liquid PD (F)	0.6	1.3	0.3	1.9	0.5	2.5	0.7	3.2	0.9	3.8	1.0	4.4	1.2	5.1	1.4
	Max Lift (ft)	25	50	50	75	75	100	100	97	97	90	90	82	121	74	119
	Max Lift PD (F)	2.7	5.4	4.5	8.1	6.7	10.8	9.0	11.2	8.9	11.2	8.5	11.2	11.2	11.2	11.2
	Suction Line Size (in.)	7/8	7/8	1-1/8	7/8	1-1/8	1-1/8		1-1/8	1-3/8	1-1/8	1-3/8	1-1/8	1-3/8	1-1/8	1-3/8
	Suction Ln PD (F)	1.5	3.1	0.8	4.6	1.2	1.6		2.1	0.7	2.5	0.8	2.9	1.0	3.3	1.1
	Charge (lb)	15.6	19.0	19.7	20.8	24.1	23.1	26.9	25.1	30.7	26.0	32.8	27.0	34.8	27.9	37.1
	#/TR	2.08	2.53	2.63	2.77	3.21	3.08	3.59	3.35	4.09	3.47	4.37	3.60	4.64	3.73	4.95
CAS121 TC 113.1, SC 7.1°F	Liquid Line Size (in.)	1/2	1/2	5/8	1/2	5/8	1/2	5/8	1/2	5/8	1/2	5/8	5/8		5/8	
	Liquid PD (F)	0.9	1.9	0.5	2.8	0.8	3.8	1.0	4.7	1.3	5.7	1.6	1.8		2.1	
	Max Lift (ft)	25	40	50	28	54	34	68	22	65	11	63	59		55	
	Max Lift PD (F)	2.9	5.0	4.5	5.0	5.0	6.5	6.4	6.5	6.4	6.5	6.5	6.4		6.4	
	Suction Line Size (in.)	7/8	1-3/8	1-3/8	1-1/8	1-3/8	1-1/8	1-3/8	1-1/8	1-3/8	1-1/8	1-3/8	1-1/8	1-3/8	1-1/8	1-3/8
	Suction Ln PD (F)	2.4	1.2	1.2	1.8	0.6	2.4	0.9	3.1	1.1	3.7	1.3	4.3	1.5	4.9	1.7
	Charge (lb)	15.7	18.0	20.0	19.8	23.1	21.6	26.1	23.6	29.2	25.5	32.3	34.1	35.3	36.9	38.4
	#/TR	1.67	1.89	2.09	2.10	2.45	2.29	2.77	2.50	3.10	2.71	3.43	3.62	3.75	3.92	4.08
CAS151 TC 146.1, SC 3.9°F	Liquid Line Size (in.)	5/8	5/8	3/4	5/8	3/4	5/8	3/4	5/8	3/4	5/8	3/4	5/8	3/4	3/4	7/8
	Liquid PD (F)	0.4	0.8	0.4	1.2	0.6	1.6	0.8	2.0	1.1	2.4	1.1	2.8	1.5	1.7	0.6
	Max Lift (ft)	23	16	23	10	18	28	38	21	36	14	35	9	30	25	43
	Max Lift PD (F)	1.8	1.84	1.84	1.8	1.8	3.3	3.3	3.3	3.3	3.3	3.3	3.3	3.3	3.3	3.3
	Suction Line Size (in.)	1-5/8	1-5/8	1-5/8	1-1/8	1-3/8	1-3/8		1-3/8	1-5/8	1-3/8	1-5/8	1-3/8	1-5/8	1-3/8	1-5/8
	Suction Ln PD (F) (Cap Red)	0.1	0.2	0.2	3.3 (–2.3%)	1.2	1.6		2.0	0.8	2.4 (–0.7%)	1.0	2.8 (–1.4%)	1.2	3.2 (–2.1%)	1.3
	Charge (lb)	35.1	38.4	40.9	37.6	41.8	41.1	46.1	44.2	51.6	47.3	56.1	50.3	60.6	63.4	76.9
	#/TR	3.10	3.99	3.62	3.09	3.44	3.38	3.79	3.64	4.24	3.89	4.61	4.14	4.98	5.21	6.32
CAS181 TC 185.7, SC 18.4°F	Liquid Line Size (in.)	5/8	5/8		5/8		5/8		5/8		5/8		5/8	3/4	5/8	3/4
	Liquid PD (F)	0.7	1.3		2.0		2.7		3.4		4.0		4.7	2.5	5.4	2.8
	Max Lift (ft)	25	50		75		100		125		150		153	175	145	175
	Max Lift PD (F)	2.8	5.65		8.5		11.3		14.1		16.9		17.9	17.5	17.9	17.9
	Suction Line Size (in.)	1-3/8"	1-3/8"		1-3/8"		1-3/8"		1-3/8"	1-5/8"	1-3/8"	1-5/8"	1-3/8"	1-5/8"	1-3/8"	1-5/8"
	Suction Ln PD (F) (Cap Red)	1.4	1.0		1.5		2.0		2.5 (–0.9%)	1.1	3 (–1.8%)	1.3	3.5 (–2.7%)	1.5	4 (–3.6%)	1.7
	Charge (lb)	35.1	38.1		41.2		44.2		47.3	48.4	50.4	51.7	53.4	63.7	56.5	68.3
	#/TR	2.9	3.11		3.36		3.61		3.86	3.95	4.11	4.22	4.36	5.20	4.61	5.57
CAS241 TC 233.3, SC 13.0°F	Liquid Line Size (in.)	5/8	5/8		5/8		5/8		5/8	3/4	5/8	3/4	5/8	3/4	5/8	3/4
	Liquid PD (F)	1.1	2.1		3.2		4.3		5.4	2.8	6.4	3.3	7.5	3.9	8.6	4.4
	Max Lift (ft)	25	50		93		98		85	116	71	108	59	102	46	95
	Max Lift PD (F)	3.2	6.4		9.6		12.5		12.5	12.5	12.4	12.5	12.5	12.5	12.5	12.5
	Suction Line Size (in.)	1-3/8	1-3/8		1-3/8	1-5/8	1-3/8	1-5/8	1-3/8	1-5/8	1-5/8	2-1/8	1-5/8	2-1/8	1-5/8	2-1/8
	Suction Ln PD (F) (Cap Red)	0.8	1.6		2.4 (–0.8%)	1.0	3.3. (–2.2%)	1.4	4 (–3.6%)	1.7	2.0	0.4	2.4 (–0.7%)	0.5	2.7 (–1.2%)	0.6
	Charge (lb)	31.1	34.1		37.2	37.9	40.2	41.1	43.3	50.7	47.7	58.5	51.0	63.6	54.3	68.7
	#/TR	2.52	2.77		3.02	3.07	3.26	3.34	3.51	4.11	3.87	4.75	4.13	5.16	4.40	5.57

LEGEND

#/TR — Charge to unit capacity ratio, lb per ton (at 45°F SST, 95°F ODA)
Cap Red — Capacity reduction caused by suction line pressure drop GT 2°F
Liquid PD (F) — Liquid line pressure drop, saturated temperature, °F
Max Lift — Maximum liquid lift (Indoor unit ABOVE outdoor unit only), at maximum permitted pressure drop.
Max Lift PD (F) — Pressure drop including Maximum liquid lift value
SC — Sub-cooling, °F (at liquid line valve)
TC — Total Capacity, MBH (at 45°F saturated suction, 95°F outdoor air temp)

Physical data (cont)

CAS Piping Recommendations (Dual-Circuit)[a]

MODEL & NOMINAL CAPACITY	LINEAR LINE (FT)	0 - 24	25 - 49		50 - 74		75 - 99		100 - 124		125 - 149		150 - 174		175 - 200	
	EQUIV. LINE (FT)	0 - 37	38 - 74		75 - 112		113 - 149		150 - 187		188 - 224		225 - 262		263 - 300	
CAS123 TC 55.9 Each, SC 12.7°F	Liquid Line Size (in.)	3/8	3/8		3/8		3/8	1/2	3/8	1/2	3/8	1/2	1/2	5/8	1/2	5/8
	Liquid PD (F)	1.4	2.7		5.5		5.5	0.9	6.9	1.1	8.2	1.4	1.6	0.5	1.8	0.5
	Max Lift (ft)	25	50		75		82	100	66	125	49	133	130	144	128	144
	Max Lift PD (F)	3.4	6.8		10.2		12.1	9.0	12.1	11.2	12.1	12.1	12.1	12.1	12.1	12.1
	Suction Line Size (in.)	3/4	7/8		7/8		7/8	1-1/8	7/8	1-1/8	1-1/8		1-1/8		1-1/8	
	Suction Ln PD (F) (Cap Red)	1.4	1.2		1.8		2.5 (–0.8%)	0.8	3.1 (–1.9%)	0.9	1.1		1.3		1.5	
	Charge (lb)	9.0	10.0		11.0		12.1	15.7	13.1	17.7	14.9	19.6	21.5	28.2	23.5	31.0
	#/TR	0.73	0.81		0.89		0.97	1.27	1.05	1.42	1.20	1.58	1.74	2.27	1.89	2.50
CAS153 TC 69.8 Each, SC 14.2°F	Liquid Line Size (in.)	3/8	3/8		3/8		3/8	1/2	3/8	1/2	1/2		1/2	5/8	1/2	5/8
	Liquid PD (F)	2.1	4.1		6.2		8.2	1.5	10.3	1.8	2.2		2.6	0.7	2.9	0.8
	Max Lift (ft)	25	50		75		69	155	42	125	145		140	163	135	162
	Max Lift PD (F)	4.0	8.1		12.1		13.6	9.4	13.6	11.7	13.6		13.6	13.6	13.6	13.6
	Suction Line Size (in.)	1-3/8	1-3/8		7/8	1-1/8	1-1/8		1-1/8		1-1/8		1-1/8		1-1/8	
	Suction Ln PD (F) (Cap Red)	0.3	0.6		2.9 (–1.5%)	0.8	1.1		1.4		1.6		1.9		2.2 (–0.3%)	0.7
	Charge (lb)	16.5	17.9		19.0	19.5	20.6	23.7	21.8	25.7	27.6		29.5	36.2	31.5	39.0
	#/TR	1.44	1.56		1.52	1.56	1.65	1.90	1.74	2.05	2.21		2.36	2.89	2.52	3.12
CAS183 TC 92.9 Each, SC 15.1°F	Liquid Line size	3/8	3/8		3/8	1/2	1/2		1/2		1/2	5/8	1/2	5/8	1/2	5/8
	Liquid PD (F)	3.4	6.9		10.3	1.9	2.6		3.2		3.9	1.0	4.5	1.2	5.1	1.4
	Max Lift	25	50		32	75	144		125		127	150	121	159	112	157
	Max Lift PD (F)	5.5	11.1		13.0	8.2	10.9		13.7		14.5	13.6	14.5	14.5	14.5	14.5
	Suction Line size	1-3/8	1-3/8		1-1/8		1-1/8		1-1/8	1-3/8	1-1/8	1-3/8	1-1/8	1-3/8	1-1/8	
	Suction Ln PD(F) (Cap Red)	0.5	1.0		1.2		1.6		2 (–0.1%)	0.7	2.5 (–0.8%)	0.8	2.9 (–1.5%)	1.0	3.3 (–2.2%)	1.1
	Charge	22.6	23.9		19.5	21.8	23.7		25.7	26.6	27.6	34.4	29.5	37.4	31.5	40.5
	#/TR	1.42	1.50		1.55	1.73	1.89		2.04	2.11	2.19	2.73	2.35	2.97	2.50	3.22
CAS243 TC 121.2 Each, SC 10.6°F	Liquid Line size	3/8	1/2		1/2	5/8	1/2	5/8	1/2	5/8	1/2	5/8	5/8		5/8	3/4
	Liquid PD (F)	5.6	2.2		3.3	0.9	4.3	1.2	5.4	1.5	6.5	1.8	2.1		2.4	1.3
	Max Lift	25	50		64	75	70	108	55	104	42	100	97		92	107
	Max Lift PD (F)	7.7	6.3		8.5	7.1	10.0	9.4	9.9	10.0	10.0	10.0	10.0		9.9	10.0
	Suction Line size	1-1/8	1-1/8		1-1/8	1-3/8	1-1/8	1-3/8	1-1/8	1-3/8	1-3/8		1-3/8		1-3/8	
	Suction Line PD (F) (Cap Red)	0.7	1.3		2.0	0.7	2.7 (–1.2%)	1.0	3.4 (–2.4%)	1.2	1.4		1.7		1.9	
	Charge	15.2	17.9		19.8	23.2	21.7	26.2	23.7	29.3	26.7	32.4	35.4		38.5	48.5
	#/TR	1.20	1.41		1.56	1.83	1.72	2.07	1.87	2.31	2.11	2.56	2.80		3.04	3.83
CAS303 TC 281.9 Each, SC 13.9°F	Liquid Line size	1/2	1/2	5/8	5/8	3/4	5/8	3/4	5/8	3/4	3/4	7/8	3/4	7/8	3/4	7/8
	Liquid PD (F)	4.2	8.5	3.0	4.6	2.4	6.1	3.2	7.7	4.0	4.8	1.5	5.6	1.8	6.4	2.1
	Max Lift	25	14	50	48	75	42	79	23	69	59	99	49	96	39	93
	Max Lift PD (F)	6.3	9.6	7.1	8.4	8.4	9.5	9.5	9.5	9.5	9.5	9.5	9.5	9.5	9.5	9.5
	Suction Line size	1-1/8	1-3/8	1-5/8	1-3/8	1-5/8	1-5/8		1-5/8		1-5/8		1-5/8		2-1/8	
	Suction Line PD (F) (Cap Red)	4.2 (–4.0%)	2.8 (–1.6%)	1.2	4.3 (–4.2%)	1.8	2.4		3.0 (–1.9%)		3.6 (–2.9%)		4.2 (–4.0%)		1.9	
	Charge	25.8	28.1	30.4	33.7	39.1	39.2	44.2	43.1	49.3	54.4	63.3	59.5	69.8	64.6	76.4
	#/TR	1.10	1.20	1.30	1.44	1.67	1.67	1.88	1.83	2.10	2.32	2.69	2.53	2.97	2.75	3.25

NOTE(S):
a. CAS units require TWO sets of refrigeration piping.

LEGEND

#/TR	—	Charge to unit capacity ratio, lb per ton (at 45°F SST, 95°F ODA)
Cap Red	—	Capacity reduction caused by suction line pressure drop GT 2°F
Liquid PD (F)	—	Liquid line pressure drop, saturated temperature, °F
Max Lift	—	Maximum liquid lift (Indoor unit ABOVE outdoor unit only), at maximum permitted pressure drop.
Max Lift PD (F)	—	Pressure drop including Maximum liquid lift value
SC	—	Sub-cooling, °F (at liquid line valve)
TC	—	Total Capacity, MBH (at 45°F saturated suction, 95°F outdoor air temp)

Base unit dimensions

CAS072-153 Base Unit Dimensions

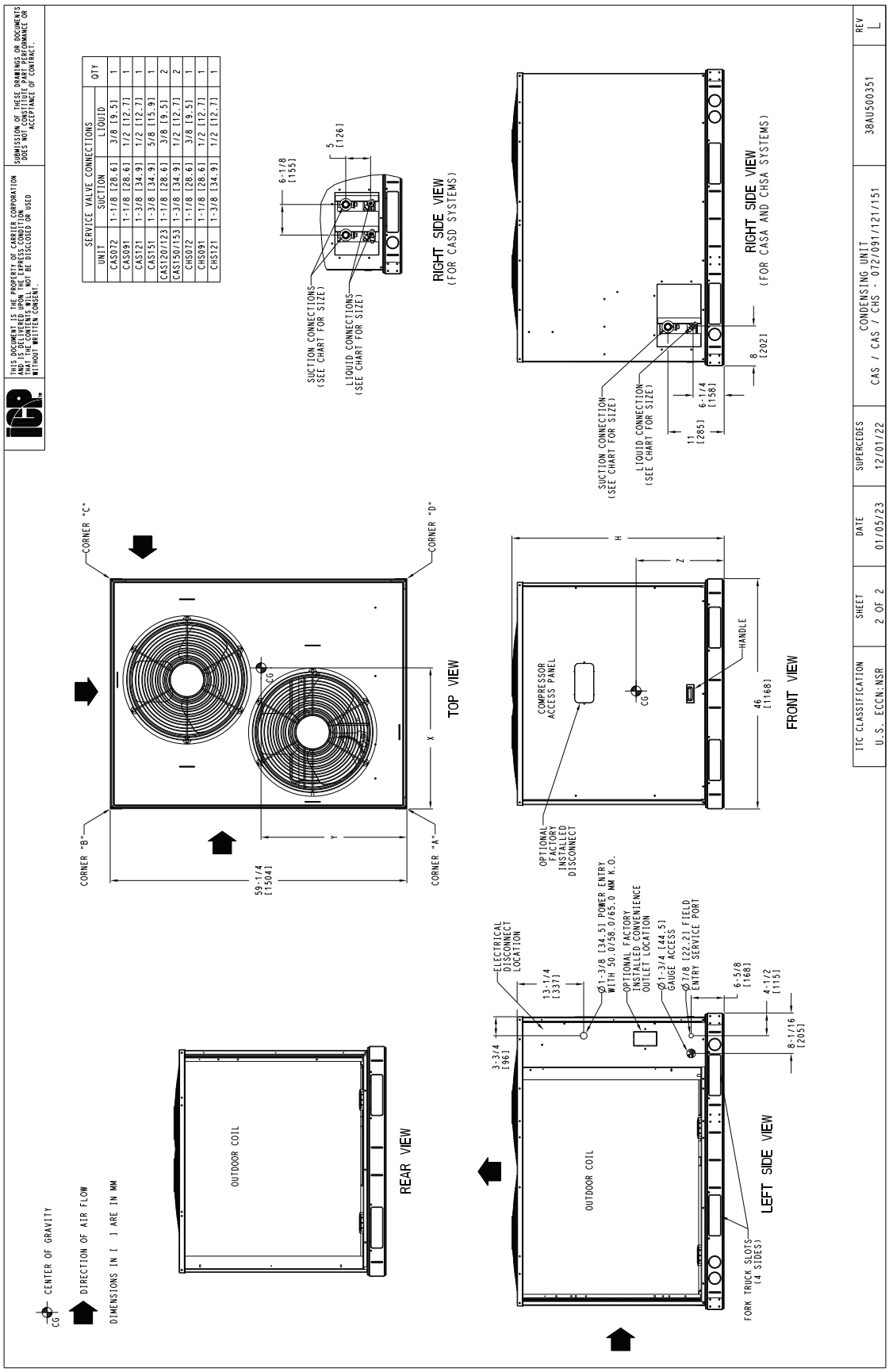

Base unit dimensions (cont)

CAS072-153 Corner Weights

UNIT	STD. UNIT WT.		CORNER A		CORNER B		CORNER C		CORNER D		CENTER OF GRAVITY[a]			UNIT HEIGHT[a]
	lb	kg	lb	kg	lb	kg	lb	kg	lb	kg	X	Y	Z	H
CAS072	389	176	141	64	96	44	62	28	91	41	18 [457.2]	24 [609.6]	21 [533.4]	42 3/8 [1076.0]
CAS091	430	195	142	64	96	44	76	34	111	50	18 [457.2]	24 [609.6]	21 [533.4]	42 3/8 [1076.0]
CAS121	490	222	177	80	120	54	78	35	114	52	18 [457.2]	24 [609.6]	24 [609.6]	50 3/8 [1279.2]
CAS151	598	271	195	88	142	64	110	50	151	68	20 [508.0]	25 [635.0]	24 [609.6]	50 3/8 [1279.2]
CAS123	516	234	185	84	117	53	83	38	131	59	19 [482.6]	23 [584.2]	24 [609.6]	50 3/8 [1279.2]
CAS153	654	297	214	97	155	70	120	54	165	75	20 [508.0]	25 [635.0]	24 [609.6]	50 3/8 [1279.2]

NOTE(S):
a. Dimensions are in inches [mm].

Base unit dimensions (cont)

CAS181/183 Base Unit Dimensions

UNIT	ELECTRICAL CHARACTERISTICS	STD. UNIT WT.		CORNER A		CORNER B		CORNER C		CORNER D		CENTER OF GRAVITY			UNIT HEIGHT
		LBS.	KG.	LBS.	KG.	LBS.	KG.	LBS.	KG.	LBS.	KG.	X	Y	Z	H
CASA180 (RTPF)	208/230-3-60,460-3-60,575-3-60	731	332	237	107	172	78	135	61	186	84	38 [965.2]	19 [482.6]	17 [431.8]	50-3/8 [1279.2]
CASD180 (RTPF)	208/230-3-60,460-3-60,575-3-60	731	332	237	107	172	78	135	61	186	84	38 [965.2]	19 [482.6]	17 [431.8]	50-3/8 [1279.2]

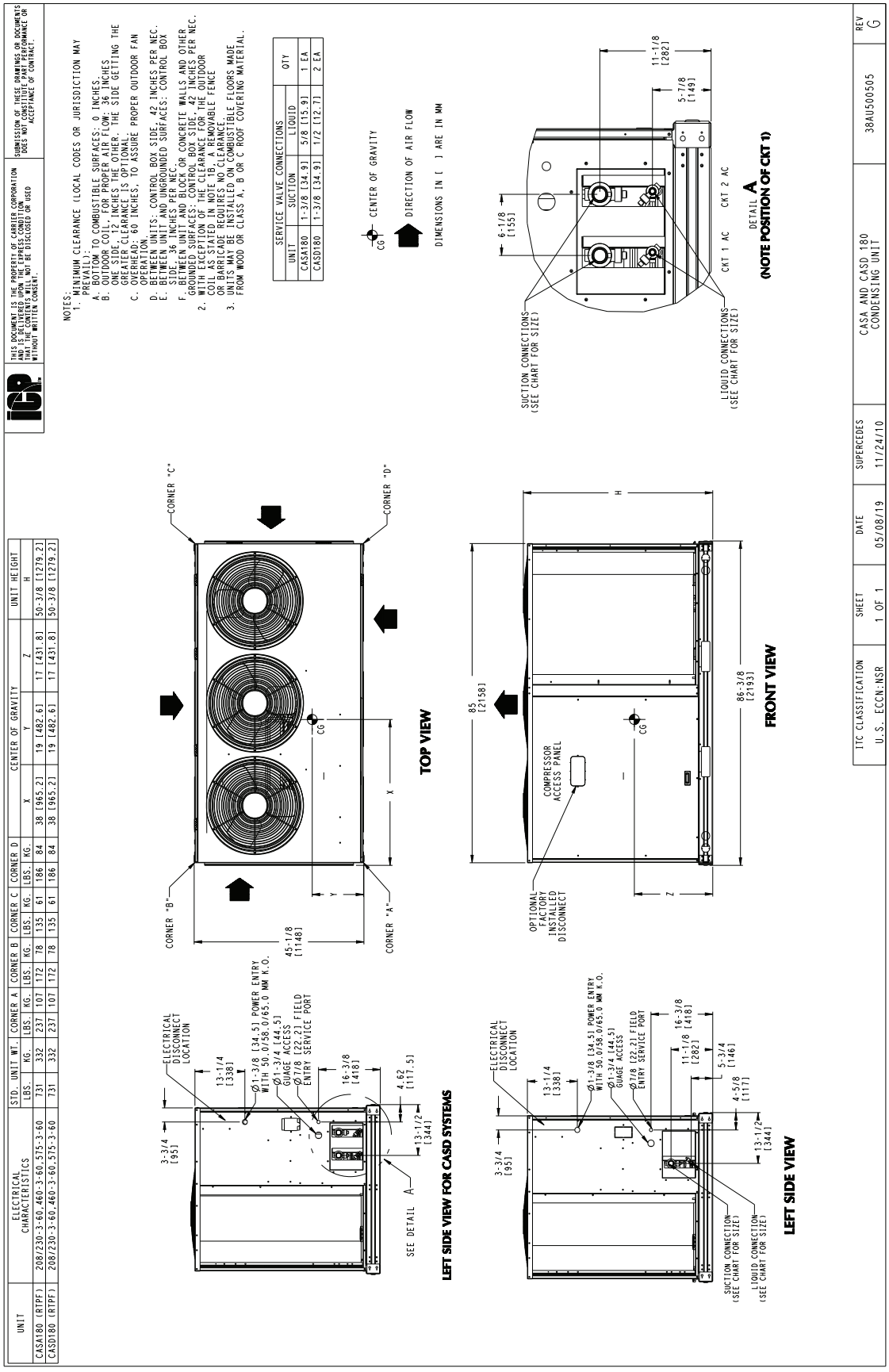

NOTE: Drawings and dimensions for size 180 also apply to 181/183 and those for refrigerant option D also apply to option T.

Base unit dimensions (cont)

CAS241/243/303 Base Unit Dimensions

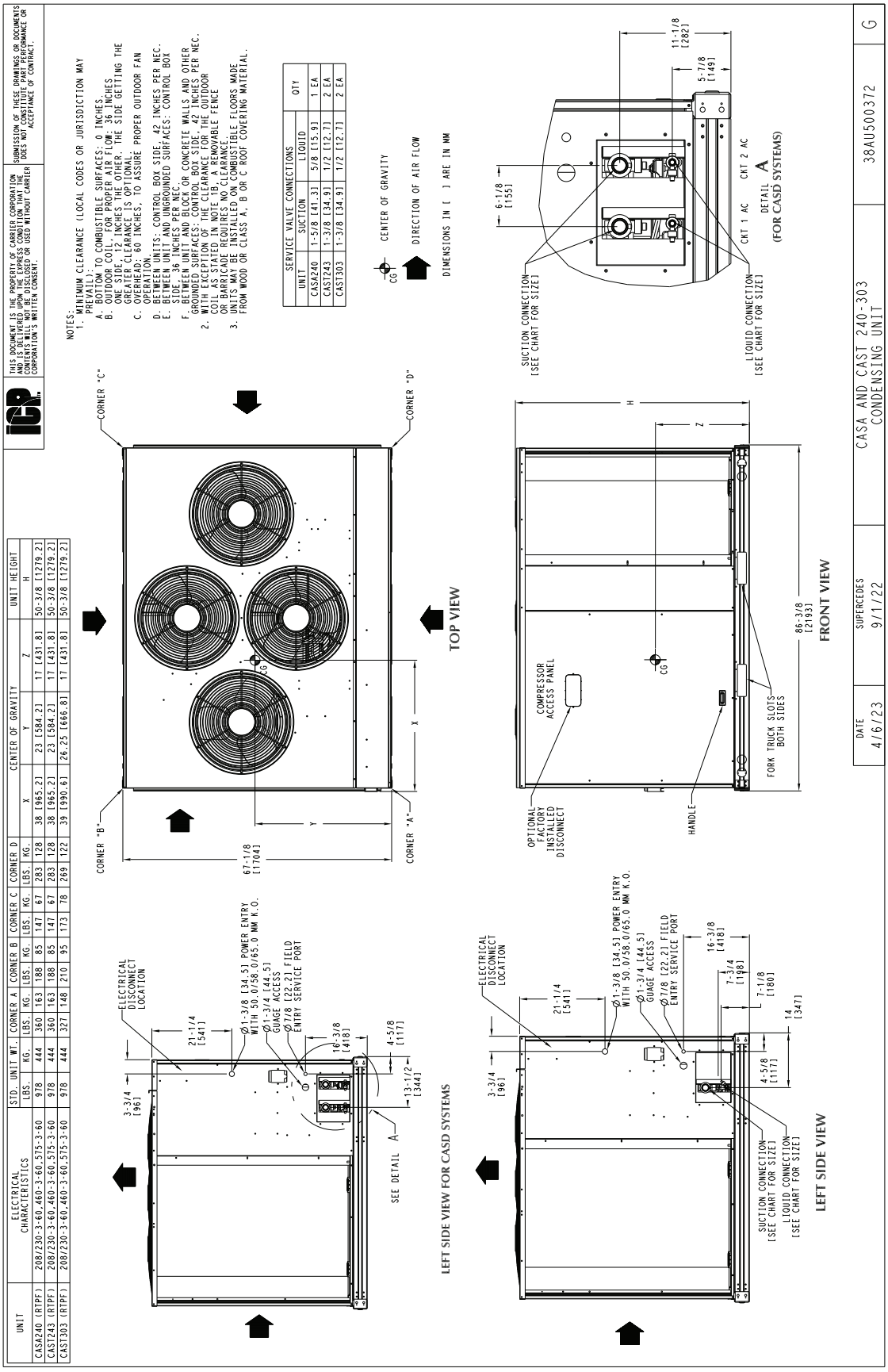

UNIT	ELECTRICAL CHARACTERISTICS	STD. UNIT WT. LBS.	KG.	CORNER A LBS.	KG.	CORNER B LBS.	KG.	CORNER C LBS.	KG.	CORNER D LBS.	KG.	CENTER OF GRAVITY X	Y	Z	UNIT HEIGHT H
CAS3240 (RTPF)	208/230-3-60,460-3-60,575-3-60	978	444	360	163	188	85	147	67	283	128	38 [965.2]	23 [584.2]	17 [431.8]	50-3/8 [1279.2]
CAST243 (RTPF)	208/230-3-60,460-3-60,575-3-60	978	444	360	163	188	85	147	67	283	128	38 [965.2]	23 [584.2]	17 [431.8]	50-3/8 [1279.2]
CAST303 (RTPF)	208/230-3-60,460-3-60,575-3-60	978	444	327	148	210	95	173	78	269	122	39 [990.6]	26.25 [666.8]	17 [431.8]	50-3/8 [1279.2]

SERVICE VALVE CONNECTIONS			QTY
UNIT	SUCTION	LIQUID	
CASA240	1-5/8 [41.3]	5/8 [15.9]	1 EA
CAST243	1-3/8 [34.9]	1/2 [12.7]	2 EA
CAST303	1-3/8 [34.9]	1/2 [12.7]	2 EA

NOTE: Drawings and dimensions for size 240 also apply to 241.

CAS/FAS-FAX options and accessories

CAS Factory-Installed Options

ITEM	OPTION[a]	ACCESSORY[b]
E-coated Aluminum-Fin Coils	X	
Condenser Coil Grille		X
Louvered Hail Guard	X	X
Low-Ambient Temperature Kit	X	
Non-fused Disconnect Switch[c]	X	
Pre-coated Coils	X	
Powered Convenience Outlet	X	
2-Speed Indoor Fan Motor System	X[d]	
Unpowered Convenience Outlet	X	

NOTE(S):
a. Factory-installed option.
b. Field-installed accessory.
c. Non-fused disconnect switch cannot be used when unit MOCP electrical rating exceeds 80 amps.
d. Requires pairing with FAS/FAX series packaged air handlers.

E-coated Aluminum-Fin Coils

Have a flexible and durable epoxy coating uniformly applied to all coil surfaces. Unlike brittle phenolic dip and bake coatings, e-coating provides superior protection with unmatched flexibility, edge coverage, metal adhesion, thermal performance, and most importantly, corrosion resistance.

Pre-coated Coils

Provides protection in mild coastal environments.

2-Speed Indoor Fan Motor system

Our 2-Speed Indoor Fan Motor system units will automatically adjust the indoor fan motor speed in sequence with the unit's cooling operation. Per ASHRAE 90.1 2010 standard section 6.4.3.10.b, during the first stage of cooling operation the fan motor (either ECM or controlled by VFD) will adjust to provide two-thirds of the total cfm established for the unit. When a call for the second stage of cooling is required, the fan motor will allow the total cfm (100%) established for the unit. During the heating mode the fan motor will allow total design cfm (100%) operation and during the ventilation mode the fan motor will allow operation to two-thirds of total cfm.

Low-Ambient Temperature Kit (–20°F [–29°C])

Controls outdoor-fan motor operation to maintain the correct head pressure at low outdoor ambient temperatures.

Louvered Hail Guard

Protects coils against damage from flying debris and hail.

Non-Fused Disconnect Switch

Used to remove power locally at the condensing unit. This switch also includes a power lockout capability to protect the service person. This lockout switch saves the service person time and effort because there is no need to access a distant disconnect switch while servicing the unit.

NOTE: Non-fused disconnect switch cannot be used when unit MOCP electrical rating exceeds 80 amps.

CAS Field-Installed Accessories

Louvered Hail Guard

Protects coils against damage from flying debris and hail.

Condenser Coil Grille

Protects condensing unit coil from impact by large objects and vandalism.

CAS Factory-Installed Options

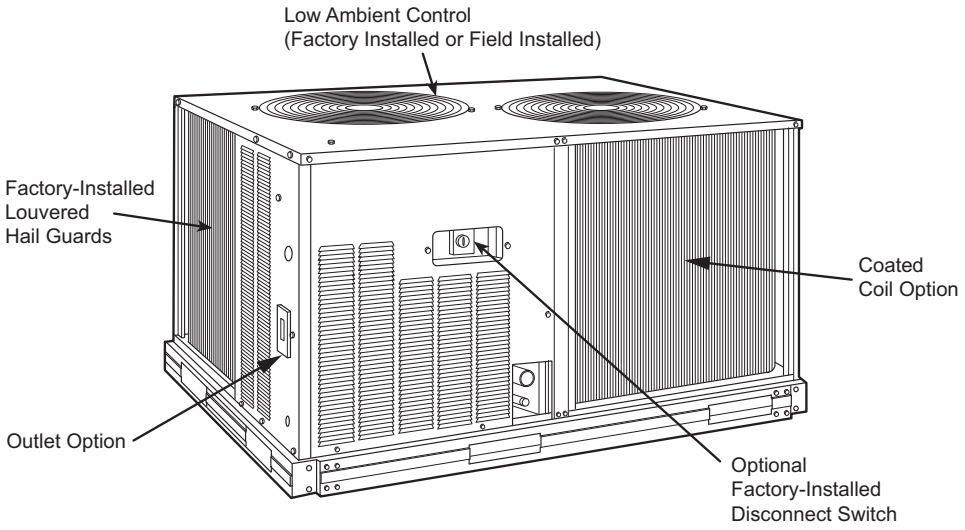

CAS/FAS-FAX options and accessories (cont)

FAS/FAX Factory-Installed Options

ITEM	OPTION[a]	ACCESSORY[b]
Alternate Drives (FAS only)	X	
Alternate Fan Motors (FAS only)	X	
CO_2 Sensors		X
Condensate Drain Trap		X
Discharge Duct Adapter (FAX only)		X
Discharge Plenum		X
Economizer		X
Electric Heater		X
Hot Water Heating Coils (2 row)		X
Optional VFD Display Kit (FAS only)		X
Overhead Suspension Package		X
Pre-painted Units	X	
Return Air Grille		X
Steam Heating Coil (1 row)		X

NOTE(S):
a. Factory-installed option.
b. Field-installed accessory.

Alternate fan motors and drives (FAS only)

Alternate fan motors and drives are available to provide the widest possible range of performance.

Pre-painted steel units

Pre-painted units are available from the factory for applications that require painted units. Units are painted with American Sterling Gray color.

FAS/FAX Field-Installed Accessories

Optional VFD display Kit (FAS only)

There is an optional VFD display kit offered (as an accessory) for FAS units to allow the user to troubleshoot any VFD faults in the field after start-up.

NOTE: Do not use the VFD display kit to adjust the frequency and voltage in the VFD to required performance requirements. This could lead to decreased life of the motor and VFD.

Two-row hot water coils

Two-row hot water coils have copper tubes mechanically bonded to aluminum plate fins and non-ferrous headers.

One-row steam coil

One-row steam coils have copper tubes and aluminum fins.

The Inner Distributing Tube (IDT) design provides uniform temperatures across the coil face. The steam coil has a broad operating pressure range; up to 20 psi (138 kPag) at 260°F (126°C). The IDT steam coils are especially suited to applications where sub-freezing air enters the unit.

Electric heater

Electric heaters are available as factory-supplied, field-installed accessories for nominal 240v, 480v, and 575v, 3-phase, 60 Hz units. Electric heaters are ETL (U.S.A.) and ETL, Canada, agency-approved. They have single-point power wiring. The heater assembly includes contactors with 24-v coils, power wiring, 24-v control wiring terminal blocks, and a hinged access panel. Electric heaters should not be used with an air discharge plenum.

Economizer

Provides ventilation air and provides “free” cooling if the outside ambient temperature and humidity are suitable. The economizer can also be used in conjunction with a field-supplied programmable thermostat and CO_2 sensors to help meet indoor air quality requirements. The economizer can be used in both vertical and horizontal positions.

Discharge plenum

Discharge plenum directs the air discharge directly into the occupied space; integral horizontal and vertical louvers enable redirection of airflow. This accessory is available unpainted or painted. Field assembly is required (only applicable for vertical application).

Return-air grille

The return-air grille provides a protective barrier over the return-air opening and gives a finished appearance to units installed in the occupied space. This accessory is available unpainted or painted.

Overhead suspension package

The overhead suspension package includes necessary brackets to support units in horizontal ceiling installations.

CO_2 sensors

CO_2 sensors can be used in conjunction with the economizer accessory to help meet indoor air quality requirements. The sensor signals the economizer to open when the CO_2 level in the space exceeds the set point. A field-installed programmable thermostat can be used to override the sensor if the outside-air temperature is too high or too low.

Condensate drain trap

The condensate drain trap includes an overflow shutoff switch that can be wired to turn off the unit if the trap becomes plugged. Kit also includes a wire harness that can be connected to an alarm if desired. The transparent trap is designed for easy service and maintenance.

Discharge duct adapter

This accessory is required for replacements using FAX units with or without electric heat. It is not required for new installations or when using steam coil, hot water coil, or discharge plenum accessories.

CAS/FAS-FAX Options and accessories (cont)

FAX/FAS with Discharge Plenum Return-Air Grille and Subbase

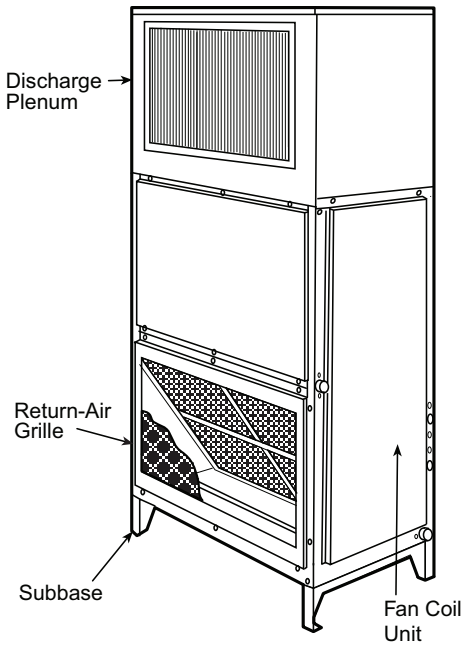

FAX/FAS with Hot Water or Steam Coil

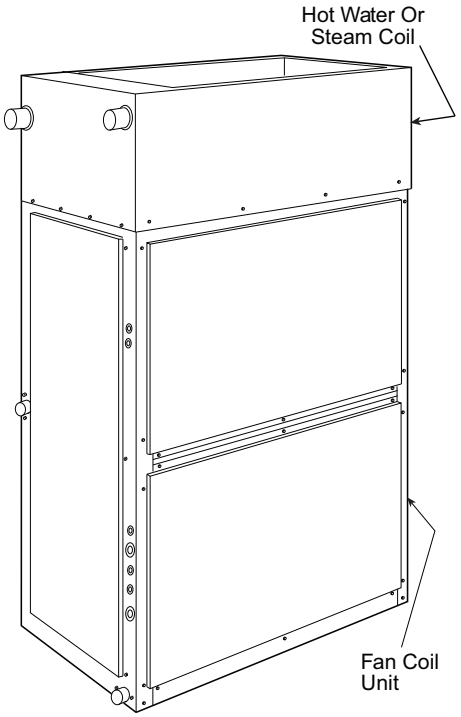

FAX/FAS with Economizer

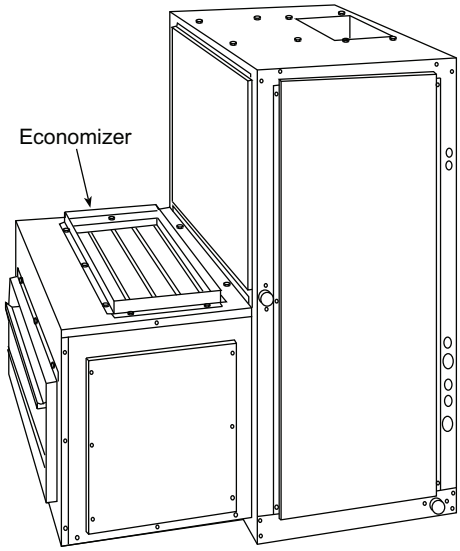

FAX/FAS with Condensate Trap

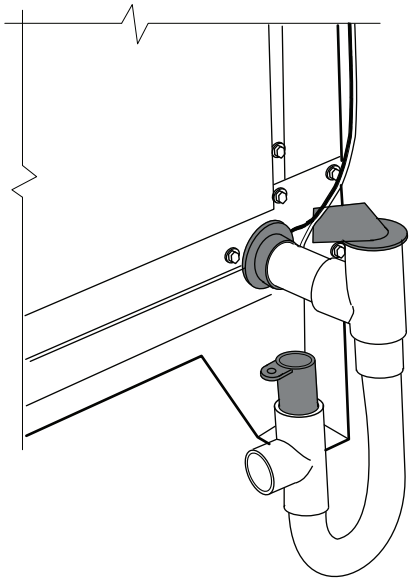

Typical piping and wiring diagrams

Typical Single Circuit/Two-Stage Wiring Diagram, 6 Ton — 460-3-60 Units

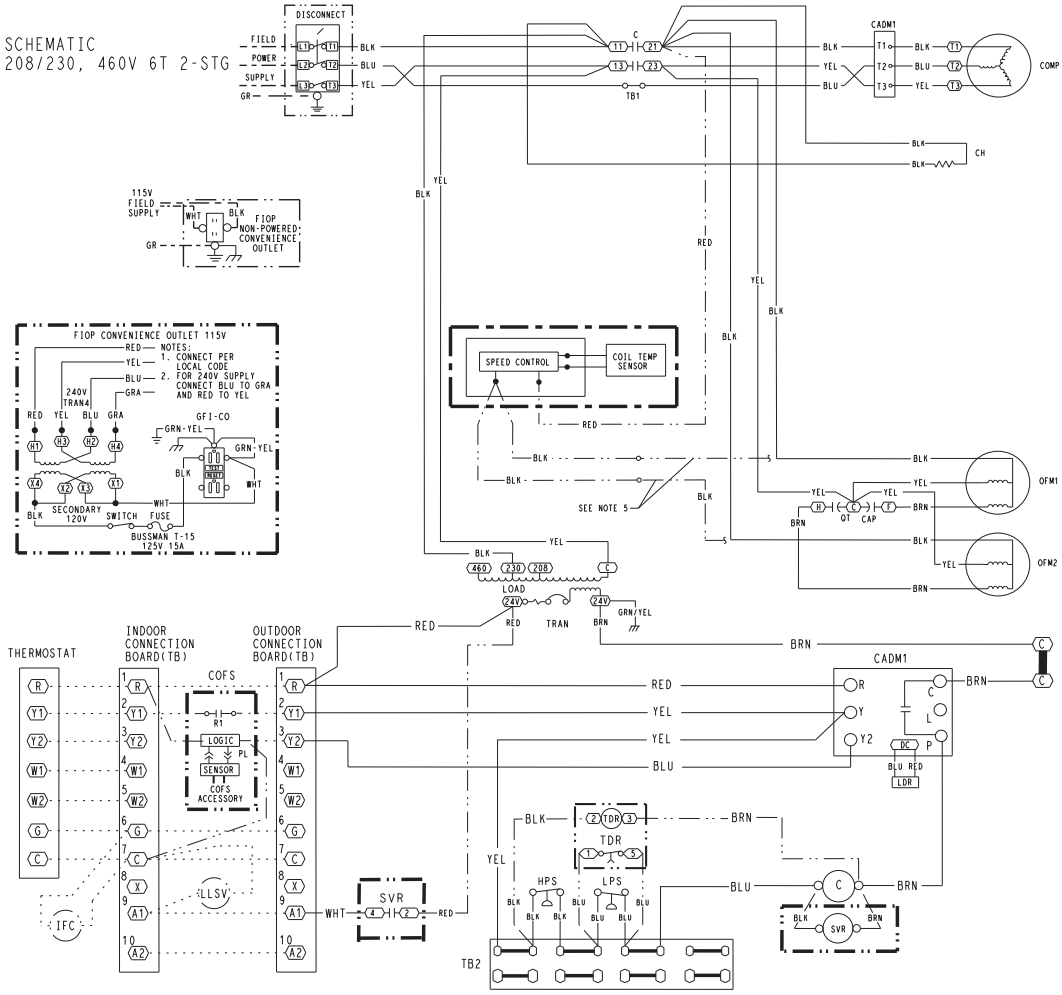

Typical piping and wiring diagrams (cont)

Typical Single Circuit/Two-Stage Wiring Diagram, 7.5 Ton — 460-3-60 Units

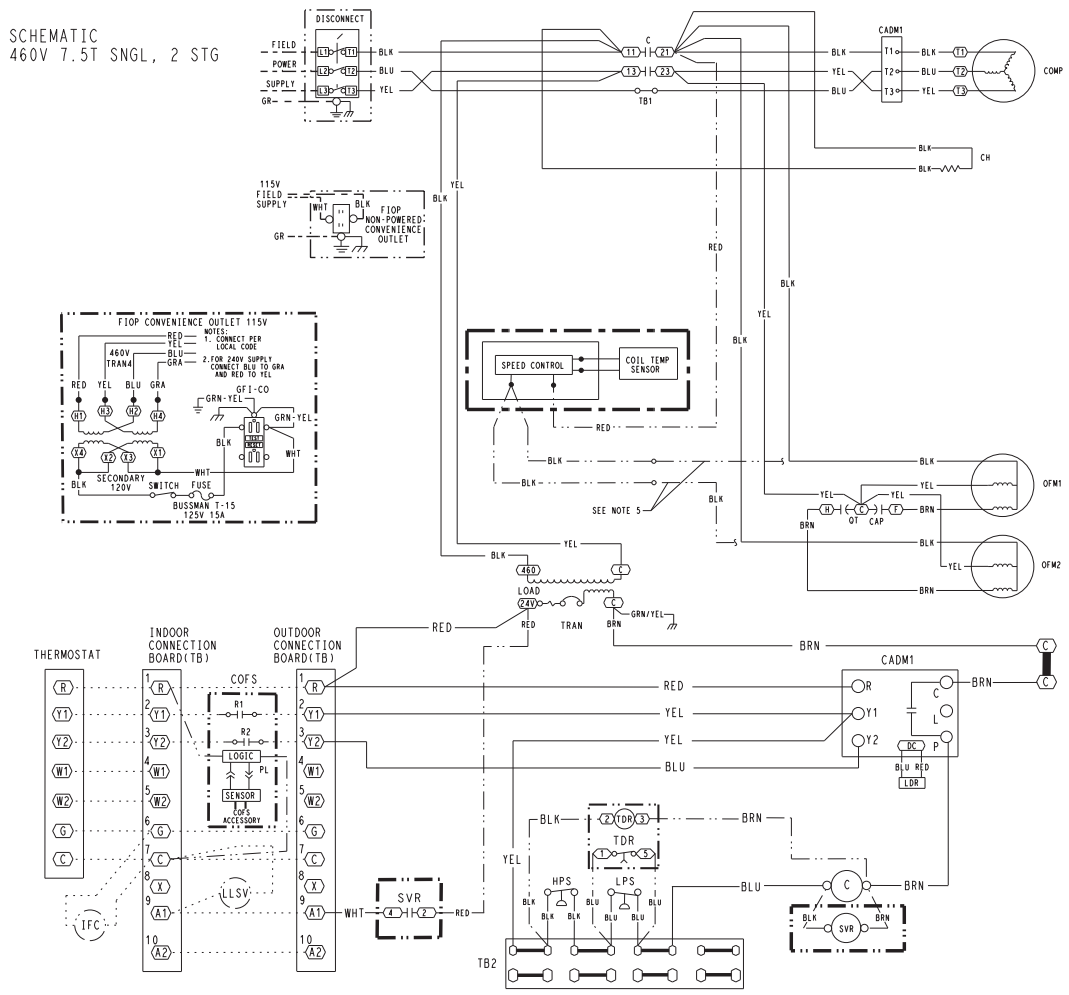

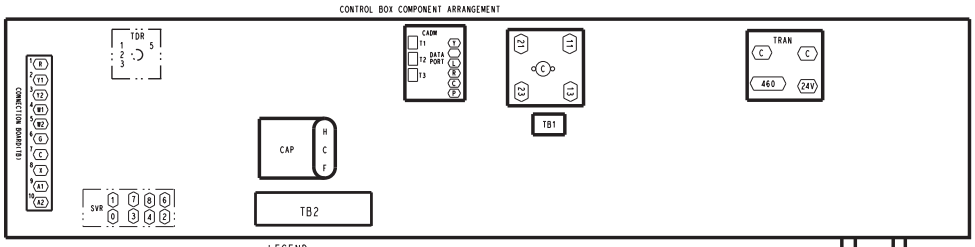

FIELD CONTROL WIRING

- FIELD SPLICE
- MARKED WIRE
- TERMINAL(MARKED)
- TERMINAL(UNMARKED)
- TERMINAL BLOCK
- SPLICE
- FACTORY WIRING
- FIELD CONTROL WIRING
- FIELD POWER WIRING
- ACCESSORY OR OPTIONAL WIRING
- TO INDICATE COMMON POTENTIAL ONLY, NOT TO REPRESENT WIRING

LEGEND

C	CONTACTOR, COMPRESSOR
CAP	CAPACITOR
CADM	COMFORT ALERT - DIAGNOSTICS MODULE
CH	CRANKCASE HEATER
COFS	CONDENSATE OVERFLOW SWITCH
COMP	COMPRESSOR MOTOR
CTD	CYCLE TIMER DEVICE
CTR	COMPRESSOR TIMERR RELAY
DCS	DIGITAL COMPRESSOR SOLENOID
EQUIP	EQUIPMENT
FU	FUSE
GR	GROUND
HPS	HIGH PRESSURE SWITCH
IFC	INDOOR FAN CONTACTOR
LDR	COMPRESSOR LOADER PLUG
LLSV	LIQUID LINE SOLENOID VALVE
LPS	LOW PRESSURE SWITCH
OFM	OUTDOOR FAN MOTOR
OFR	OUTDOOR FAN RELAY
QT	QUADRUPLE TERMINAL
SVR	SOLENOID VALVE RELAY
TB	TERMINAL BLOCK
TDR	TIME DELAY RELAY
TRAN	TRANSFORMER

NOTES:

1. IF ANY OF THE ORIGINAL WIRE FURNISHED MUST BE REPLACED, IT MUST BE REPLACED WITH TYPE 90 C WIRE OR ITS EQUIVALENT.
2. USE COPPER CONDUCTORS ONLY.
3. COMPRESSORS AND FAN MOTORS ARE THERMALLY PROTECTED. THREE PHASE MOTORS ARE PROTECTED AGAINST PRIMARY SINGLE PHASING CONDITIONS.
4. TRANSFORMER IS WIRED FOR 230V UNIT. IF THE UNIT IS TO BE RUN WITH 208V POWER SUPPLY, DISCONNECT BLACK WIRE FROM 230V TAP AND CONNECT TO 208V TAP.
5. ON UNITS WITH SPEED CONTROL, REMOVE OFM1 AND OFM2 BLK WIRES FROM COMPRESSOR CONTACTOR TERMINAL 21 AND CONNECT TO BLK WIRES FROM SPEED CONTROL.

FIELD WIRING — DISCONNECT PER NEC

38AU000760 | -

Typical piping and wiring diagrams (cont)

Typical Single Circuit/Two-Stage Wiring Diagram, 10 Ton — 460-3-60 Units

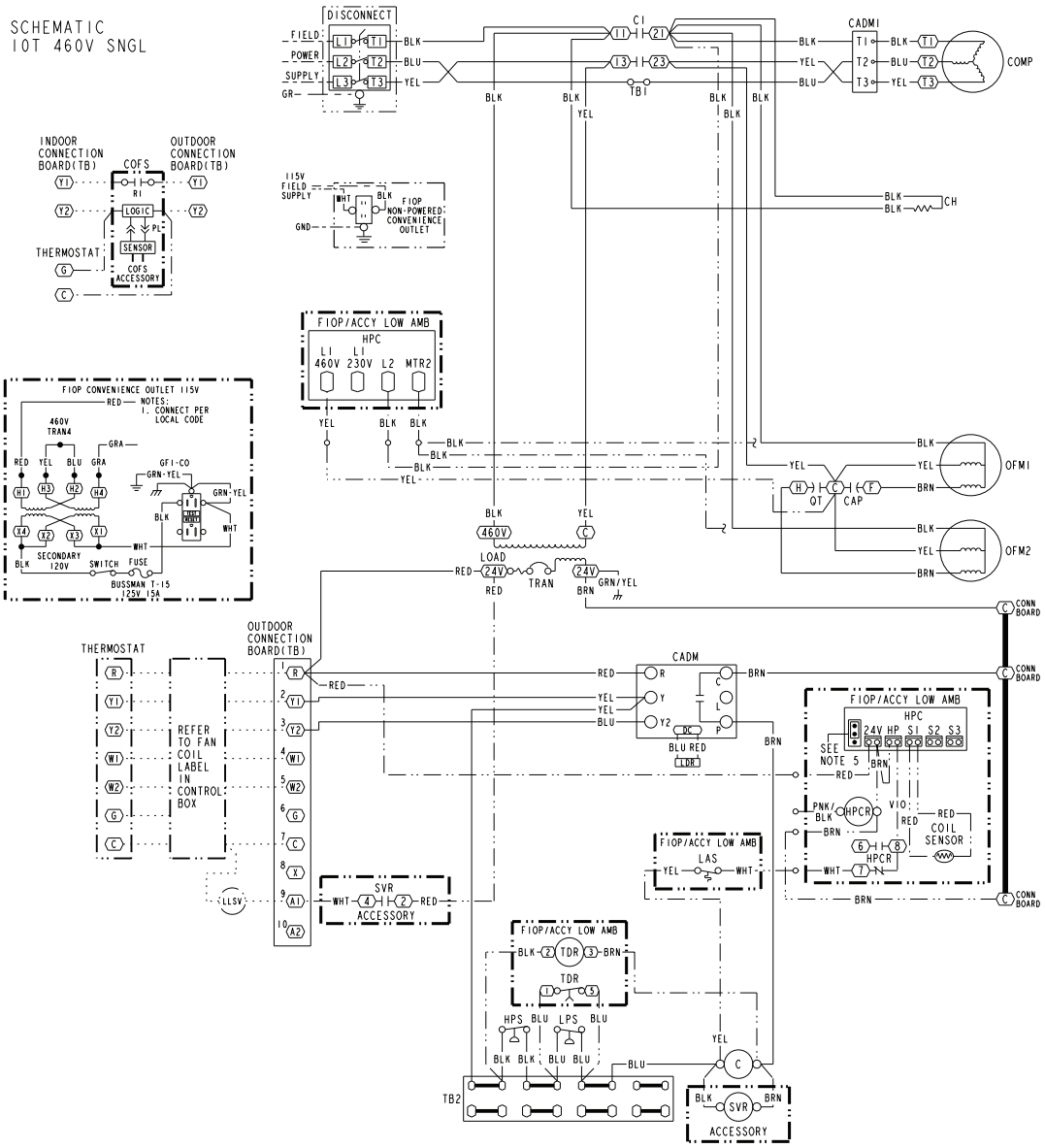

FIELD CONTROL WIRING

- FIELD SPLICE
- (X) MARKED WIRE
- (X) TERMINAL(MARKED)
- ○ TERMINAL(UNMARKED)
- [X] TERMINAL BLOCK
- • SPLICE
- —— FACTORY WIRING
- – – FIELD CONTROL WIRING
- ▬ ▬ FIELD POWER WIRING
- –·–·– ACCESSORY OR OPTIONAL WIRING
- ▬ TO INDICATE COMMON POTENTIAL ONLY, NOT TO REPRESENT WIRING

LEGEND

C	CONTACTOR, COMPRESSOR
CAP	CAPACITOR
CADM	COMFORT ALERT - DIAGNOSTICS MODULE
CH	CRANKCASE HEATER
CLR	COMPRESSOR LOCK-OUT RELAY
COFS	CONDENSATE OVERFLOW SWITCH
COMP	COMPRESSOR MOTOR
EQUIP	EQUIPMENT
FU	FUSE
GR	GROUND
HPC	HEAD PRESSURE CONTROL
HPCR	HEAD PRESSURE CONTROL RELAY
HPS	HIGH PRESSURE SWITCH
IFC	INDOOR FAN CONTACTOR
LAR	LOW AMBIENT RELAY
LAS	LOW AMBIENT TEMP SWITCH
LDR	COMPRESSOR LOADER PLUG
LLSV	LIQUID LINE SOLENOID VALVE
LPS	LOW PRESSURE SWITCH
OFM	OUTDOOR FAN MOTOR
OFR	OUTDOOR FAN RELAY
QT	QUADRUPLE TERMINAL

LEGEND

SVR	SOLENOID VALVE RELAY
TB	TERMINAL BLOCK
TDR	TIME DELAY RELAY
TRAN	TRANSFORMER

NOTES:

1. IF ANY OF THE ORIGINAL WIRE FURNISHED MUST BE REPLACED, IT MUST BE REPLACED WITH TYPE 90 C WIRE OR ITS EQUIVALENT.
2. USE COPPER CONDUCTORS ONLY.
3. COMPRESSORS AND FAN MOTORS ARE THERMALLY PROTECTED. THREE PHASE MOTORS ARE PROTECTED AGAINST PRIMARY SINGLE PHASING CONDITIONS.
4. TRANSFORMER IS WIRED FOR 460V UNIT.
5. HARDSTART AND CUTOUT SET TO "MIN", JUMPER PIN ON TOP 2-PINS AS SHOWN.

38AU501322 | A

Typical piping and wiring diagrams (cont)

Typical Single Circuit/Two-Stage Wiring Diagram, 12.5 Ton — 460-3-60 Units

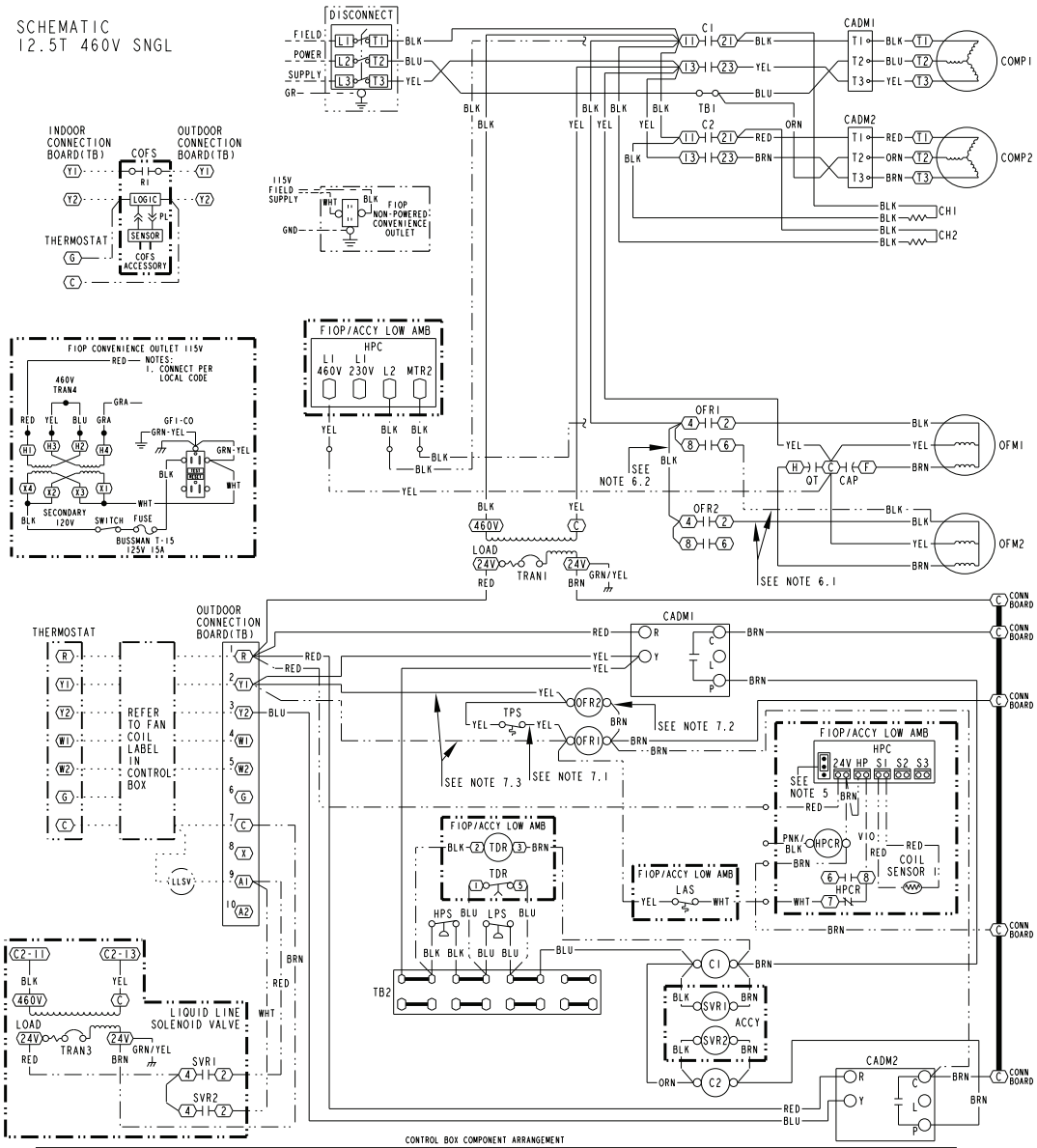

FIELD CONTROL WIRING

- FIELD SPLICE
- (X) MARKED WIRE
- (X) TERMINAL(MARKED)
- ○ TERMINAL(UNMARKED)
- [X] TERMINAL BLOCK
- • SPLICE
- —— FACTORY WIRING
- – – FIELD CONTROL WIRING
- ▬ ▬ FIELD POWER WIRING
- –·–· ACCESSORY OR OPTIONAL WIRING
- ▬ TO INDICATE COMMON POTENTIAL ONLY, NOT TO REPRESENT WIRING

LEGEND

C	CONTACTOR, COMPRESSOR
CAP	CAPACITOR
CADM	COMFORT ALERT - DIAGNOSTICS MODULE
CH	CRANKCASE HEATER
CLR	COMPRESSOR LOCK-OUT RELAY
COFS	CONDENSATE OVERFLOW SWITCH
COMP	COMPRESSOR MOTOR
EQUIP	EQUIPMENT
FU	FUSE
GR	GROUND
HPC	HEAD PRESSURE CONTROL
HPCR	HEAD PRESSURE CONTROL RELAY
HPS	HIGH PRESSURE SWITCH
IFC	INDOOR FAN CONTACTOR
LAR	LOW AMBIENT RELAY
LAS	LOW AMBIENT TEMP SWITCH
LDR	COMPRESSOR LOADER PLUG
LLSV	LIQUID LINE SOLENOID VALVE
LPS	LOW PRESSURE SWITCH
OFM	OUTDOOR FAN MOTOR
OFR	OUTDOOR FAN RELAY
QT	QUADRUPLE TERMINAL

LEGEND

SVR	SOLENOID VALVE RELAY
TB	TERMINAL BLOCK
TDR	TIME DELAY RELAY
TRAN	TRANSFORMER

NOTES:

1. IF ANY OF THE ORIGINAL WIRE FURNISHED MUST BE REPLACED, IT MUST BE REPLACED WITH TYPE 90 C WIRE OR ITS EQUIVALENT.
2. USE COPPER CONDUCTORS ONLY.
3. COMPRESSORS AND FAN MOTORS ARE THERMALLY PROTECTED. THREE PHASE MOTORS ARE PROTECTED AGAINST PRIMARY SINGLE PHASING CONDITIONS.
4. TRANSFORMER IS WIRED FOR 460V UNIT.
5. HARDSTART AND CUTOUT SET TO "MIN", JUMPER PIN ON TOP 2-PINS AS SHOWN.
6. FOR LOW AMBIENT UNITS ONLY:
   1. MOVE BLACK WIRE FROM OFR2-2 TO OFR1-6.
   2. REMOVE BLACK WIRE FROM OFR1-4 TO OFR2-4
7. FOR LOW AMBIENT UNITS ONLY:
   1. DISCONNECT YELLOW WIRES FROM TPS TO OFR1-1 AND FROM TPS TO OFR2-1
   2. DISCONNECT BROWN WIRE FROM OFR2-0 TO OFR1-0.
   3. MOVE YELLOW WIRE FROM OFR2-1 TO OFR1-1

38AU501325 | A

Typical piping and wiring diagrams (cont)

Typical Dual Circuit/Three-Stage Wiring Diagram, 10-12.5 Ton — 460-3-60 Units

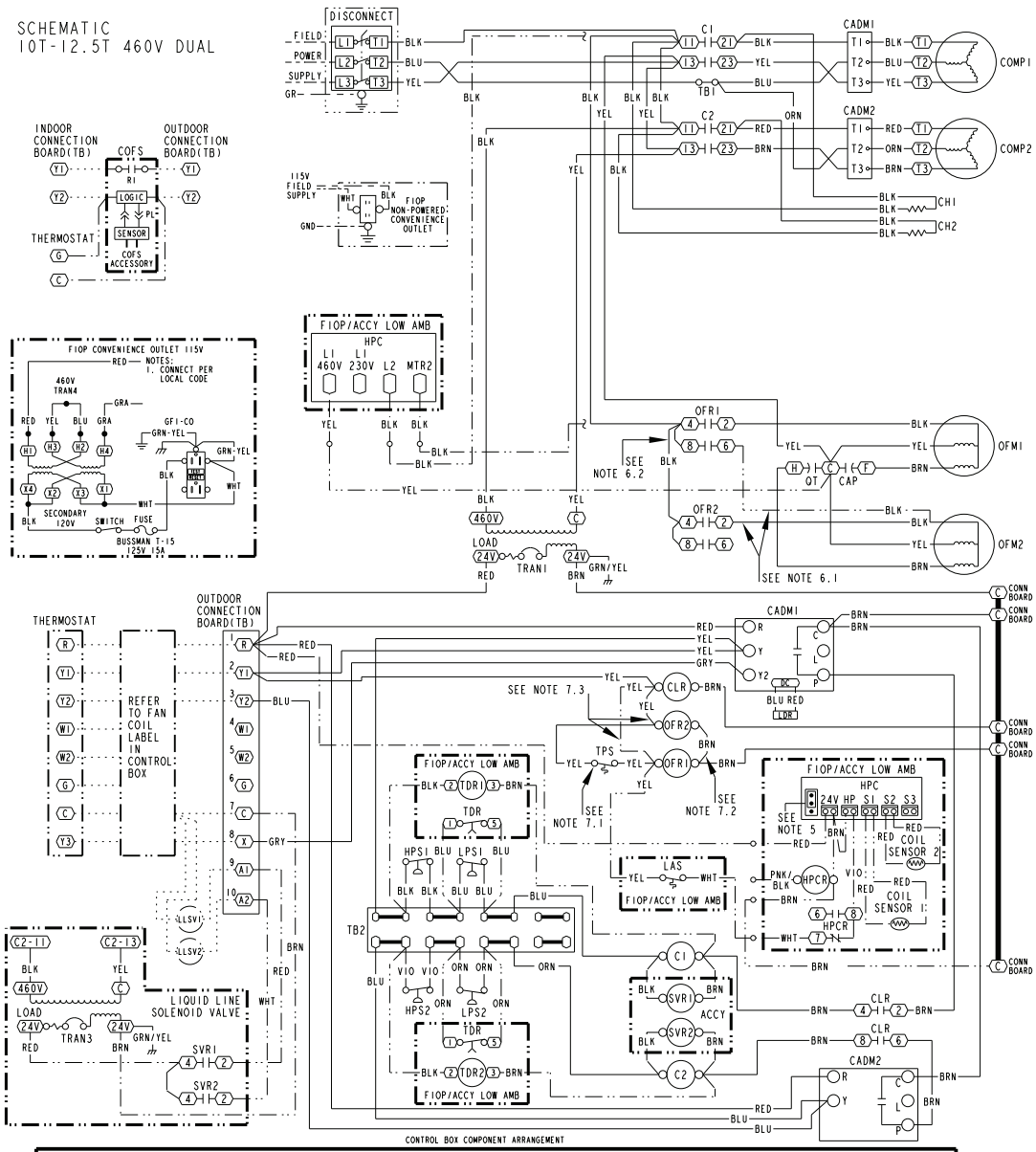

FIELD CONTROL WIRING

- FIELD SPLICE
- MARKED WIRE
- TERMINAL(MARKED)
- TERMINAL(UNMARKED)
- TERMINAL BLOCK
- SPLICE
- FACTORY WIRING
- FIELD CONTROL WIRING
- FIELD POWER WIRING
- ACCESSORY OR OPTIONAL WIRING
- TO INDICATE COMMON POTENTIAL ONLY, NOT TO REPRESENT WIRING

LEGEND

C	CONTACTOR, COMPRESSOR
CAP	CAPACITOR
CADM	COMFORT ALERT - DIAGNOSTICS MODULE
CH	CRANKCASE HEATER
CLR	COMPRESSOR LOCK-OUT RELAY
COFS	CONDENSATE OVERFLOW SWITCH
COMP	COMPRESSOR MOTOR
EQUIP	EQUIPMENT
FU	FUSE
GR	GROUND
HPC	HEAD PRESSURE CONTROL
HPCR	HEAD PRESSURE CONTROL RELAY
HPS	HIGH PRESSURE SWITCH
IFC	INDOOR FAN CONTACTOR
LAR	LOW AMBIENT RELAY
LAS	LOW AMBIENT TEMP SWITCH
LDR	COMPRESSOR LOADER PLUG
LLSV	LIQUID LINE SOLENOID VALVE
LPS	LOW PRESSURE SWITCH
OFM	OUTDOOR FAN MOTOR
OFR	OUTDOOR FAN RELAY
QT	QUADRUPLE TERMINAL

LEGEND

SVR	SOLENOID VALVE RELAY
TB	TERMINAL BLOCK
TDR	TIME DELAY RELAY
TRAN	TRANSFORMER

NOTES:

1. IF ANY OF THE ORIGINAL WIRE FURNISHED MUST BE REPLACED, IT MUST BE REPLACED WITH TYPE 90 C WIRE OR ITS EQUIVALENT.
2. USE COPPER CONDUCTORS ONLY.
3. COMPRESSORS AND FAN MOTORS ARE THERMALLY PROTECTED. THREE PHASE MOTORS ARE PROTECTED AGAINST PRIMARY SINGLE PHASING CONDITIONS.
4. TRANSFORMER IS WIRED FOR 460V UNIT.
5. HARDSTART AND CUTOUT SET TO "MIN", JUMPER PIN ON TOP 2-PINS AS SHOWN.
6. FOR LOW AMBIENT UNITS ONLY:
   1. MOVE BLACK WIRE FROM OFR2-2 TO OFR1-6.
   2. REMOVE BLACK WIRE FROM OFR1-4 TO OFR2-4
7. FOR LOW AMBIENT UNITS ONLY:
   1. DISCONNECT YELLOW WIRES FROM TPS TO OFR1-1 AND FROM TPS TO OFR2-1
   2. DISCONNECT BROWN WIRE FROM OFR2-0 TO OFR1-0.
   3. MOVE YELLOW WIRE FROM OFR2-1 TO OFR1-1.

38AU501319 | A

Typical piping and wiring diagrams (cont)

Typical Dual Circuit/Three Stage Wiring Diagram, 15 Ton — 460-3-60 Unit

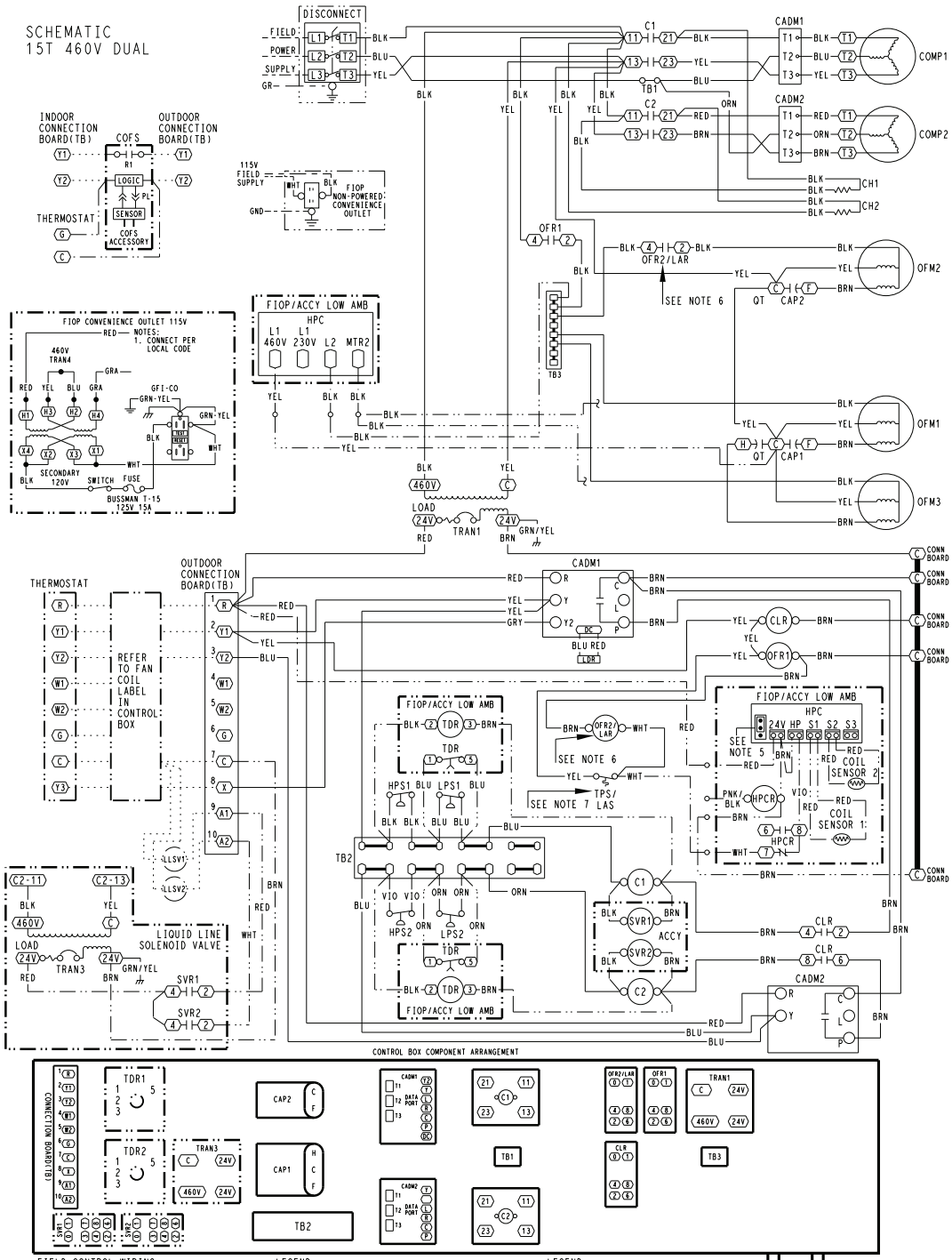

FIELD CONTROL WIRING

- FIELD SPLICE
- MARKED WIRE
- TERMINAL(MARKED)
- TERMINAL(UNMARKED)
- TERMINAL BLOCK
- SPLICE
- FACTORY WIRING
- FIELD CONTROL WIRING
- FIELD POWER WIRING
- ACCESSORY OR OPTIONAL WIRING
- TO INDICATE COMMON POTENTIAL ONLY, NOT TO REPRESENT WIRING

LEGEND

C	CONTACTOR, COMPRESSOR
CAP	CAPACITOR
CADM	COMFORT ALERT - DIAGNOSTICS MODULE
CH	CRANKCASE HEATER
CLR	COMPRESSOR LOCK-OUT RELAY
COFS	CONDENSATE OVERFLOW SWITCH
COMP	COMPRESSOR MOTOR
EQUIP	EQUIPMENT
FU	FUSE
GR	GROUND
HPC	HEAD PRESSURE CONTROL
HPCR	HEAD PRESSURE CONTROL RELAY
HPS	HIGH PRESSURE SWITCH
IFC	INDOOR FAN CONTACTOR
LAR	LOW AMBIENT RELAY
LAS	LOW AMBIENT TEMP SWITCH
LDR	COMPRESSOR LOADER PLUG
LLSV	LIQUID LINE SOLENOID VALVE
LPS	LOW PRESSURE SWITCH
OFM	OUTDOOR FAN MOTOR
OFR	OUTDOOR FAN RELAY
QT	QUADRUPLE TERMINAL

LEGEND

SVR	SOLENOID VALVE RELAY
TB	TERMINAL BLOCK
TDR	TIME DELAY RELAY
TPS	TEMPERATURE SWITCH
TRAN	TRANSFORMER

NOTES:

1. IF ANY OF THE ORIGINAL WIRE FURNISHED MUST BE REPLACED, IT MUST BE REPLACED WITH TYPE 90 C WIRE OR ITS EQUIVALENT.
2. USE COPPER CONDUCTORS ONLY.
3. COMPRESSORS AND FAN MOTORS ARE THERMALLY PROTECTED. THREE PHASE MOTORS ARE PROTECTED AGAINST PRIMARY SINGLE PHASING CONDITIONS.
4. TRANSFORMER IS WIRED FOR 460V UNIT.
5. HARDSTART AND CUTOUT SET TO "MIN", JUMPER PIN ON TOP 2-PINS AS SHOWN.
6. FOR STANDARD UNITS RELAY WILL BE OFR2, FOR LOW AMBIENT UNITS RELAY WILL BE LAR.
7. IF STANDARD UNITS SWITCH WILL BE TPS, FOR LOW AMBIENT UNITS SWITCH WILL BE LAS.

Typical piping and wiring diagrams (cont)

Typical Dual Circuit/Three Stage Wiring Diagram, 20 Ton (460-3-60 Unit Shown)

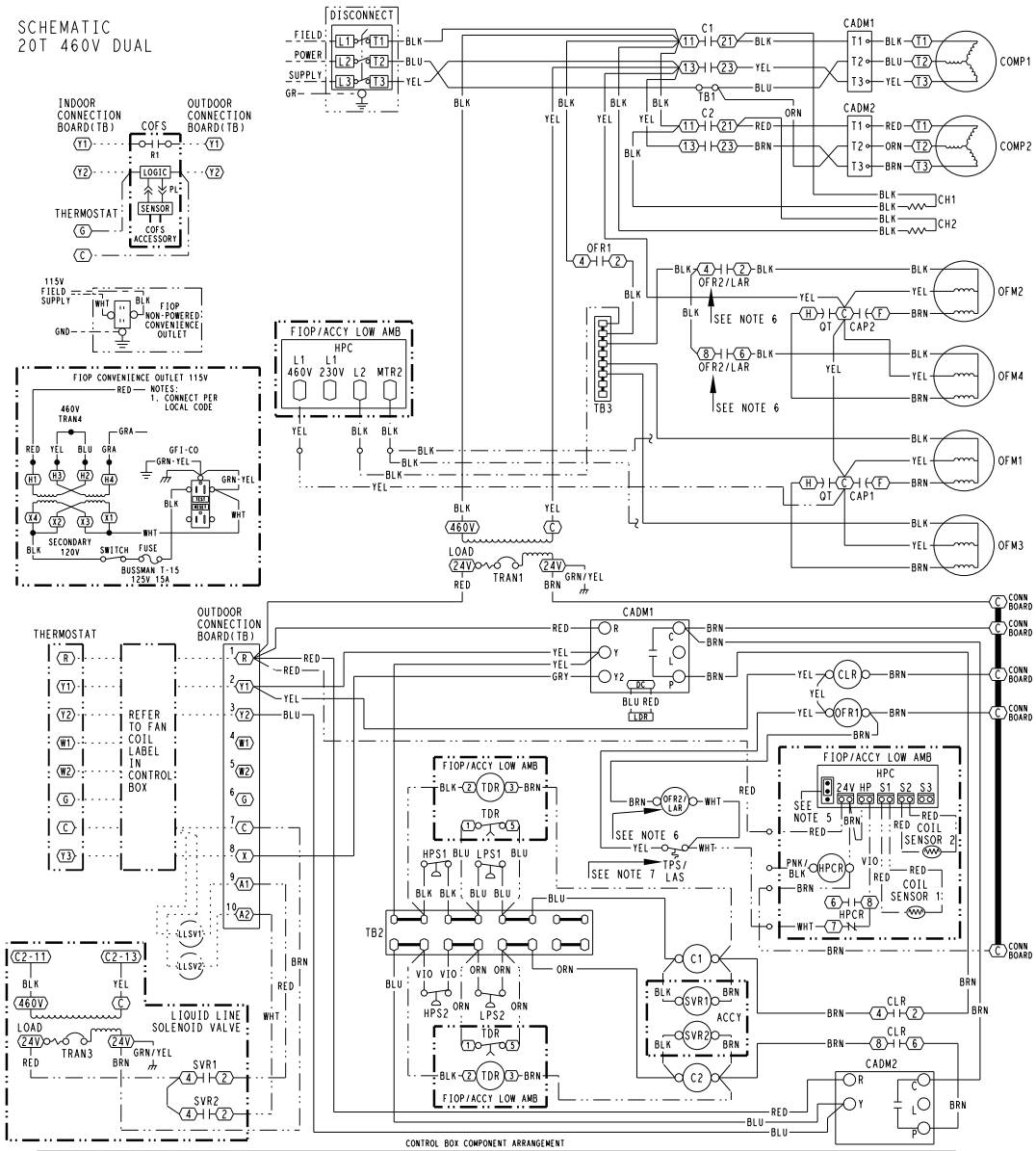

FIELD CONTROL WIRING

- FIELD SPLICE
- MARKED WIRE
- TERMINAL(MARKED)
- TERMINAL(UNMARKED)
- TERMINAL BLOCK
- SPLICE
- FACTORY WIRING
- FIELD CONTROL WIRING
- FIELD POWER WIRING
- ACCESSORY OR OPTIONAL WIRING
- TO INDICATE COMMON POTENTIAL ONLY, NOT TO REPRESENT WIRING

LEGEND

C	CONTACTOR, COMPRESSOR
CAP	CAPACITOR
CADM	COMFORT ALERT - DIAGNOSTICS MODULE
CH	CRANKCASE HEATER
CLR	COMPRESSOR LOCK-OUT RELAY
COFS	CONDENSATE OVERFLOW SWITCH
COMP	COMPRESSOR MOTOR
EQUIP	EQUIPMENT
FU	FUSE
GR	GROUND
HPC	HEAD PRESSURE CONTROL
HPCR	HEAD PRESSURE CONTROL RELAY
HPS	HIGH PRESSURE SWITCH
IFC	INDOOR FAN CONTACTOR
LAR	LOW AMBIENT RELAY
LAS	LOW AMBIENT TEMP SWITCH
LDR	COMPRESSOR LOADER PLUG
LLSV	LIQUID LINE SOLENOID VALVE
LPS	LOW PRESSURE SWITCH
OFM	OUTDOOR FAN MOTOR
OFR	OUTDOOR FAN RELAY
QT	QUADRUPLE TERMINAL

LEGEND

SVR	SOLENOID VALVE RELAY
TB	TERMINAL BLOCK
TDR	TIME DELAY RELAY
TPS	TEMPERATURE SWITCH
TRAN	TRANSFORMER

NOTES:

1. IF ANY OF THE ORIGINAL WIRE FURNISHED MUST BE REPLACED, IT MUST BE REPLACED WITH TYPE 90 C WIRE OR ITS EQUIVALENT.
2. USE COPPER CONDUCTORS ONLY.
3. COMPRESSORS AND FAN MOTORS ARE THERMALLY PROTECTED. THREE PHASE MOTORS ARE PROTECTED AGAINST PRIMARY SINGLE PHASING CONDITIONS.
4. TRANSFORMER IS WIRED FOR 460V UNIT.
5. HARDSTART AND CUTOUT SET TO "MIN", JUMPER PIN ON TOP 2-PINS AS SHOWN.
6. FOR STANDARD UNITS RELAY WILL BE OFR2, FOR LOW AMBIENT UNITS RELAY WILL BE LAR.
7. FOR STANDARD UNITS SWITCH WILL BE TPS, FOR LOW AMBIENT UNITS SWITCH WILL BE LAS.

38AU501336 | A

Typical piping and wiring diagrams (cont)

Typical Dual Circuit/Three Stage Wiring Diagram, 25 Ton (460-3-60 Unit Shown)

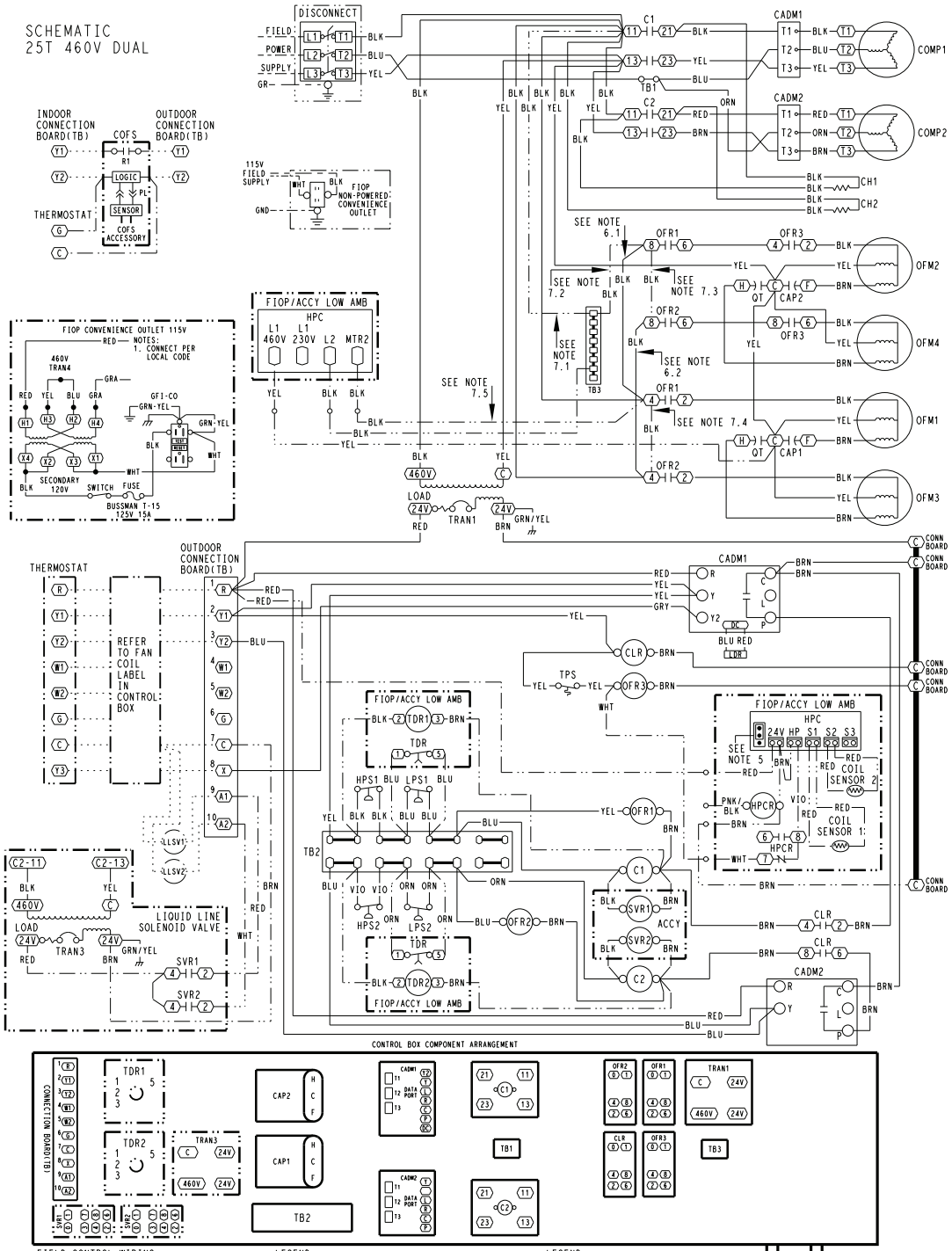

Typical piping and wiring diagrams (cont)

Typical Single Circuit/Two Stage Wiring Diagram, 15 Ton (460-3-60 Unit Shown)

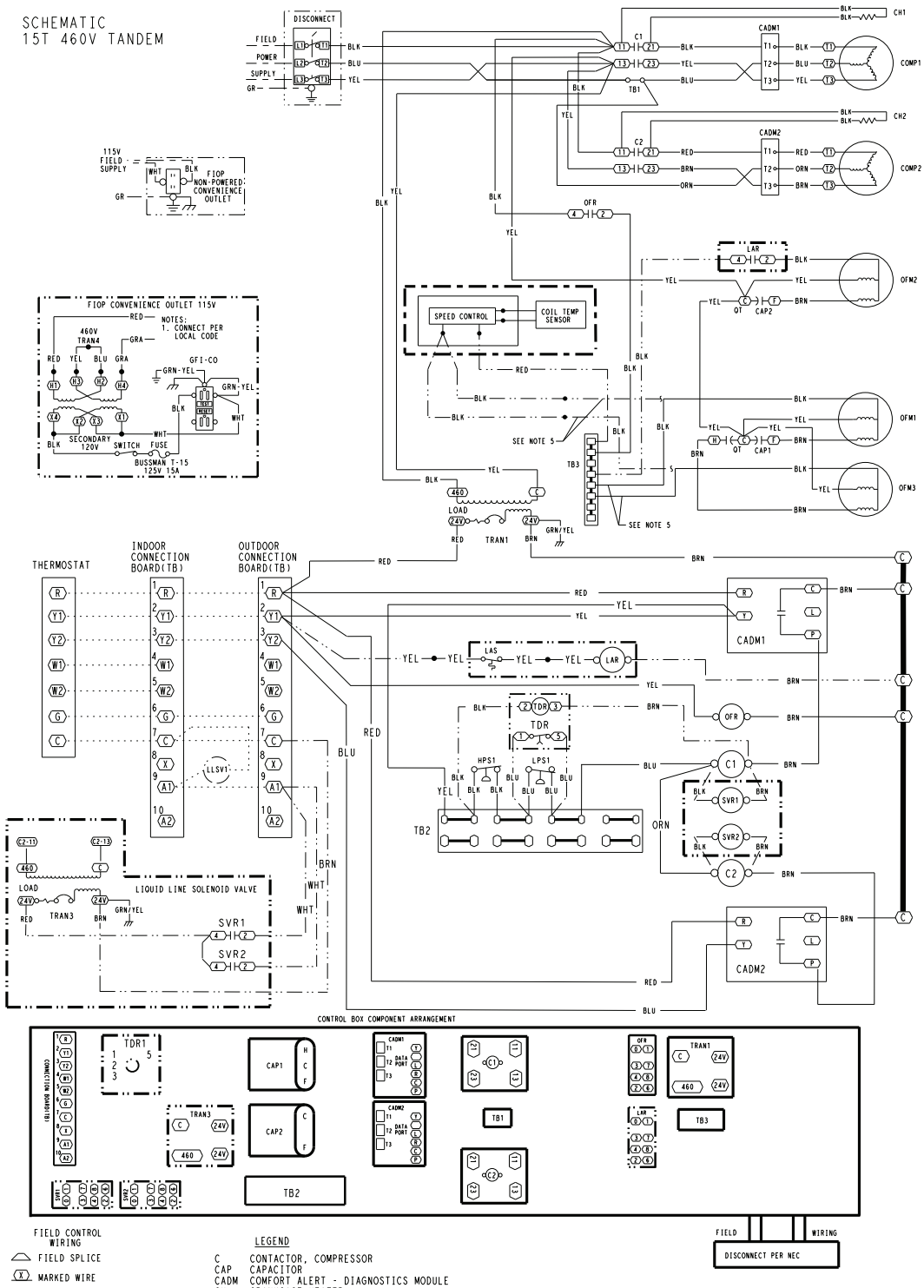

Typical piping and wiring diagrams (cont)

Typical Single Circuit/Two Stage Wiring Diagram, 20 Ton (460-3-60 Unit Shown)

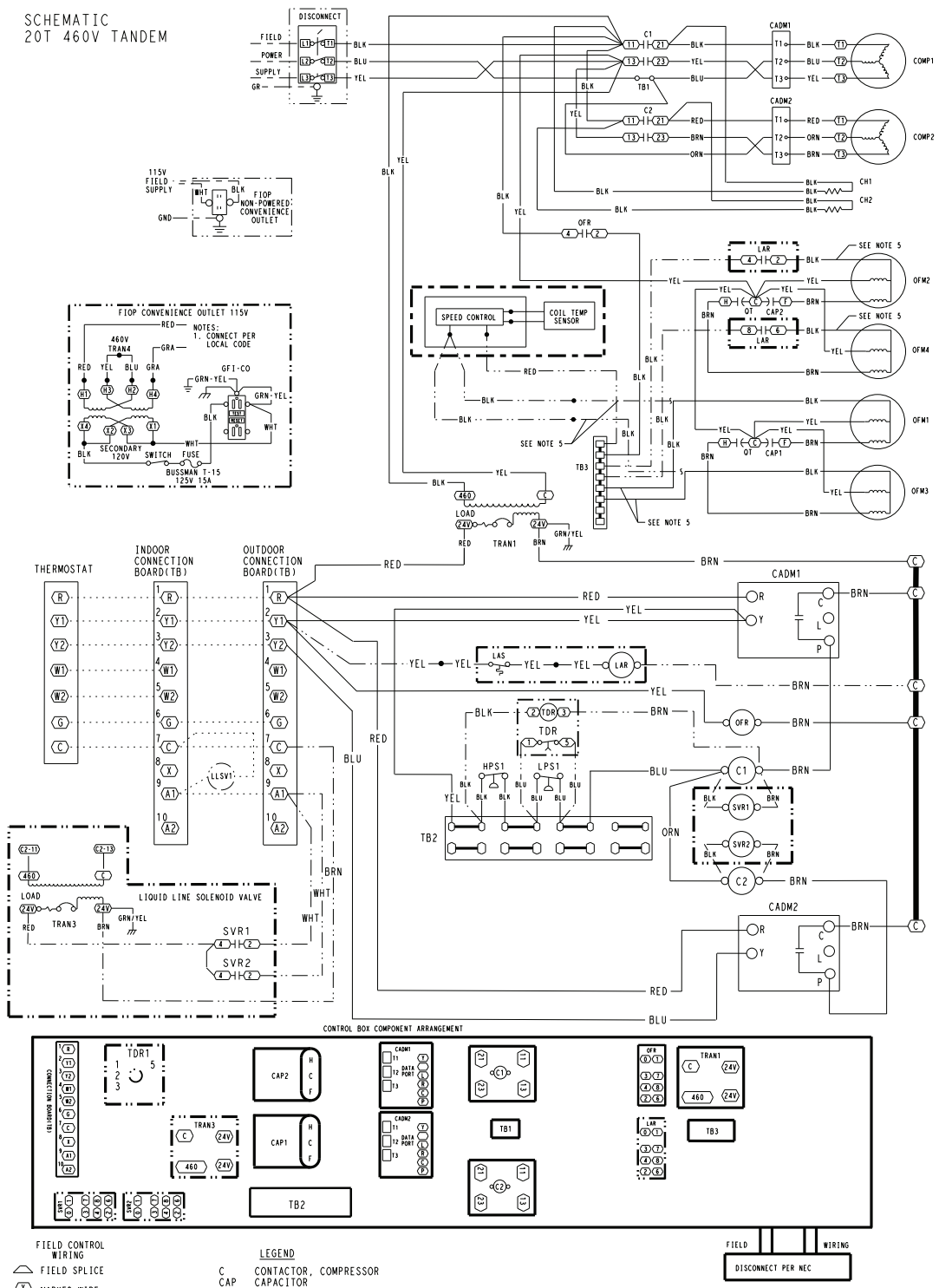

Typical piping and wiring diagrams (cont)

Roof Installation and Ceiling-Mounted Fan Coil

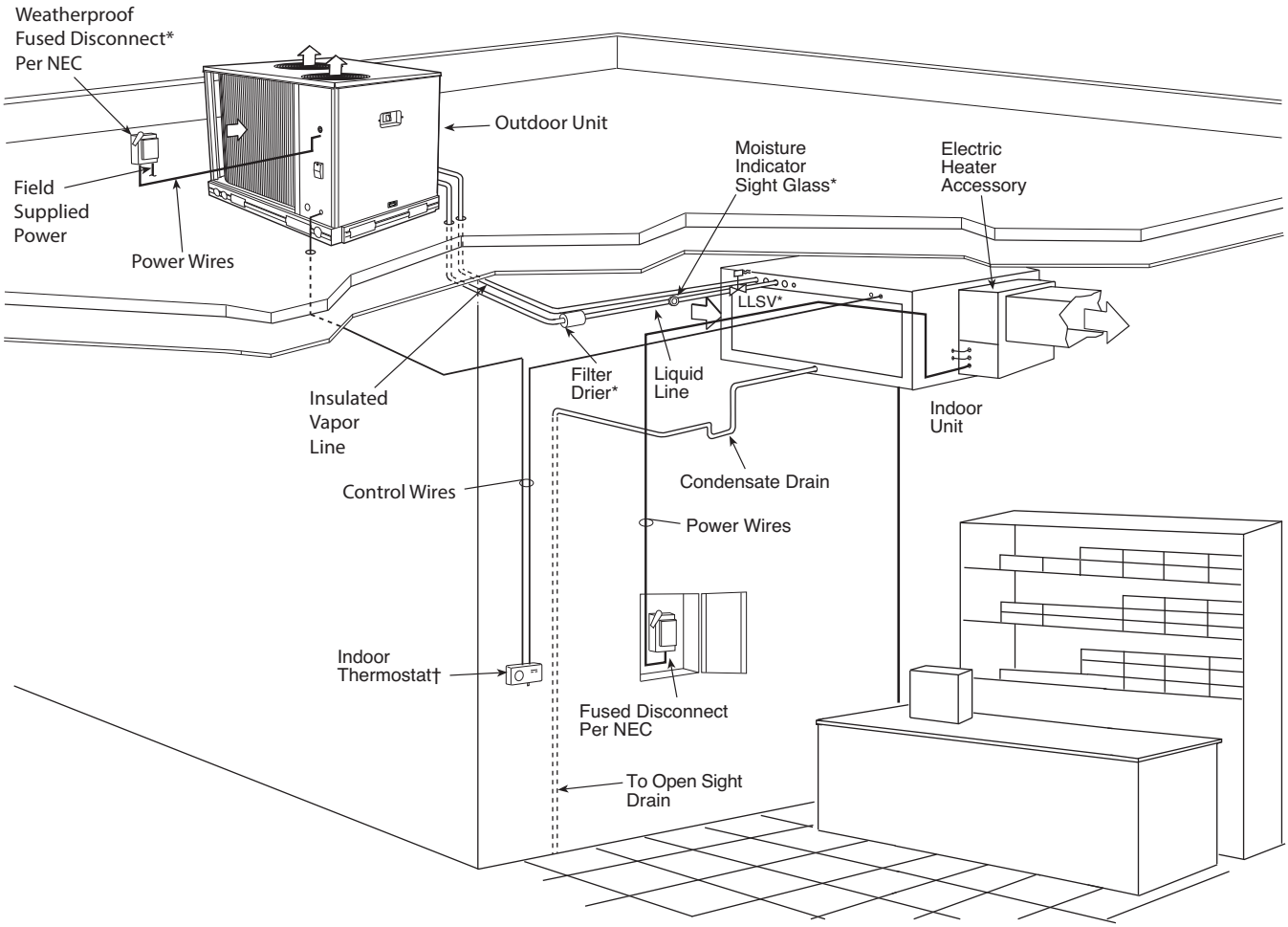

LEGEND

LLSV — Liquid Line Solenoid Valve
NEC — National Electrical Code
TXV — Thermostatic Expansion Valve

* Field-supplied.
† Double riser may be required. Consult condensing unit product data catalog for details.

NOTES:

1. All piping must follow standard refrigerant piping techniques.
2. All wiring must comply with the applicable local and national codes.
3. Wiring and piping shown are general points-of-connection guides only and are not intended for, or to include all details for, a specific installation.
4. Liquid line solenoid valve (solenoid drop control) is recommended to prevent refrigerant migration to the compressor.
5. Internal factory-supplied TXVs not shown.

Typical piping and wiring diagrams (cont)

Roof Installation and a Vertical Discharge Fan Coil

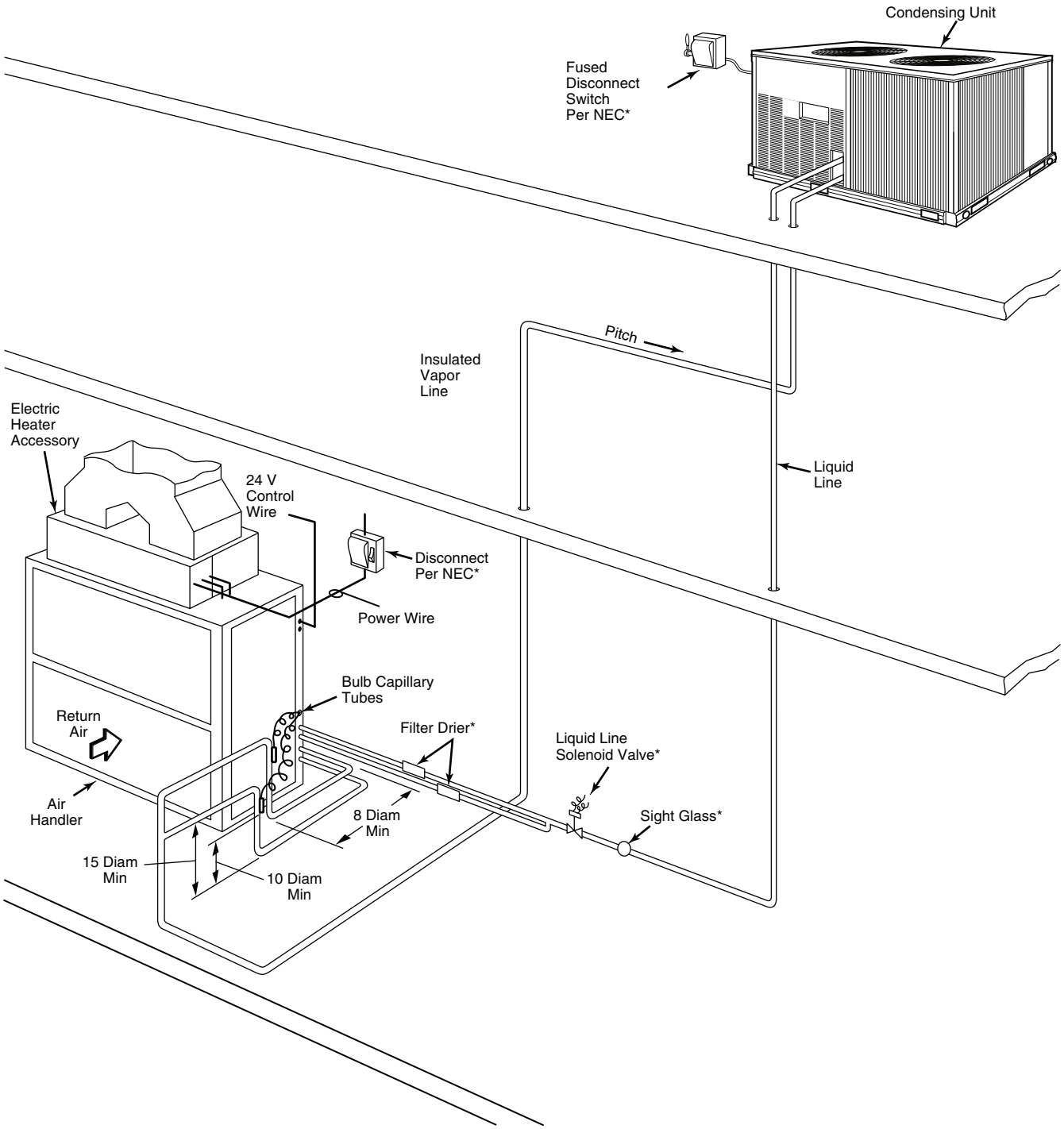

LEGEND
DIAM — Diameter
NEC — National Electrical Code
TXV — Thermostatic Expansion Valve
Piping

*Field supplied.

NOTES:
1. All piping must follow standard refrigerant piping techniques.
2. All wiring must comply with applicable local and national codes.
3. Wiring and piping shown are general points-of-connection guides only and are not intended for, or to include all details for, a specific installation.
4. Liquid line solenoid valve (solenoid drop control) is recommended to prevent refrigerant migration to the compressor on line links above 75 feet.
5. Internal factory-supplied TXVs and check valves not shown.

Typical piping and wiring diagrams (cont)

Ground Installation and Vertical Discharge Fan Coil

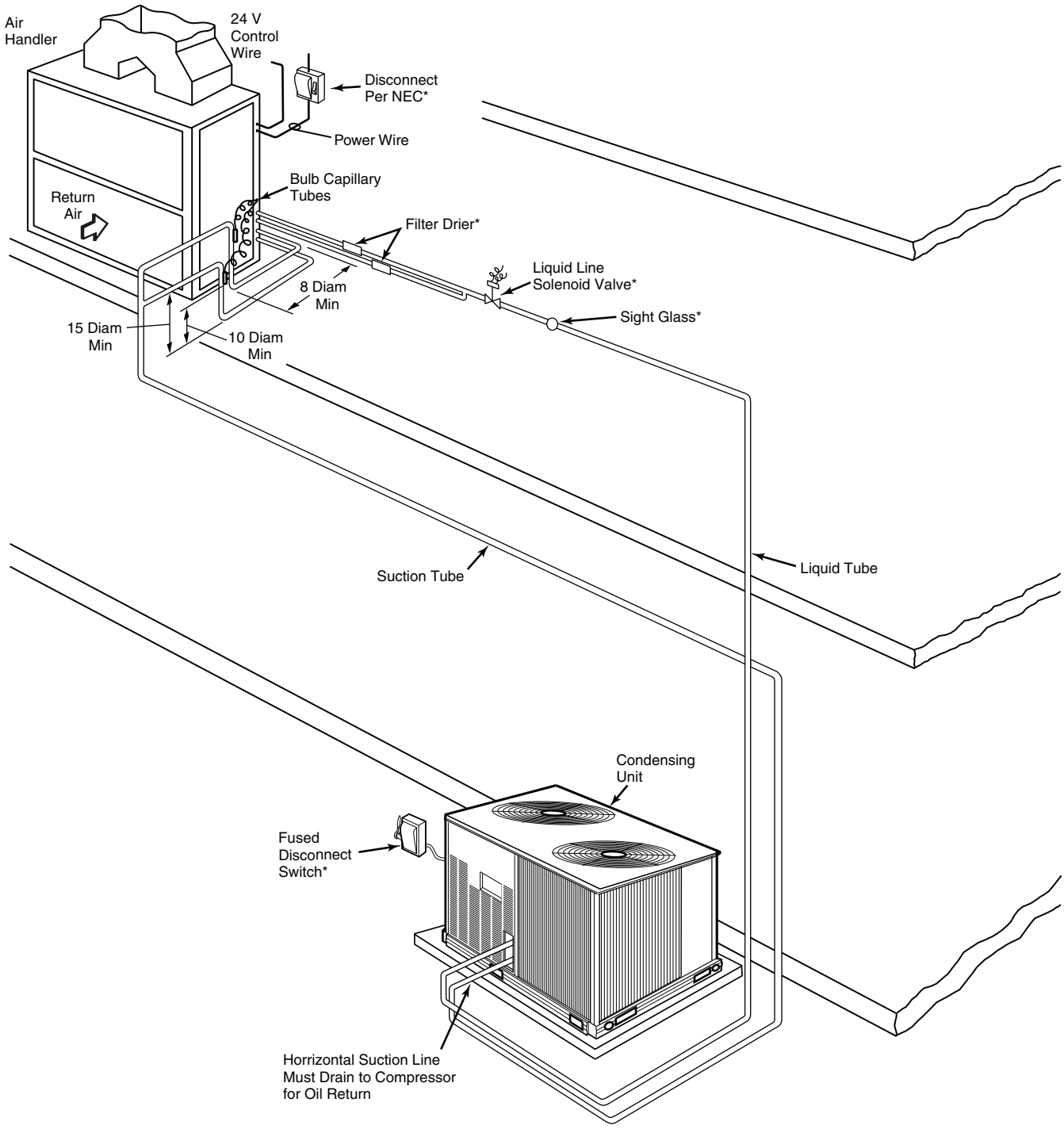

LEGEND
DIAM — Diameter
NEC — National Electrical Code
TXV — Thermostatic Expansion Valve
Piping

*Field supplied.

NOTES:
1. All piping must follow standard refrigerant piping techniques.
2. All wiring must comply with applicable local and national codes.
3. Wiring and piping shown are general points-of-connection guides only and are not intended for, or to include all details for, a specific installation.
4. Liquid line solenoid valve (solenoid drop control) is recommended to prevent refrigerant migration to the compressor on line links above 75 feet.
5. Internal factory-supplied TXVs and check valves not shown.

Typical piping and wiring diagrams (cont)

Dual Condensing Units and a Dual Circuit Fan Coil

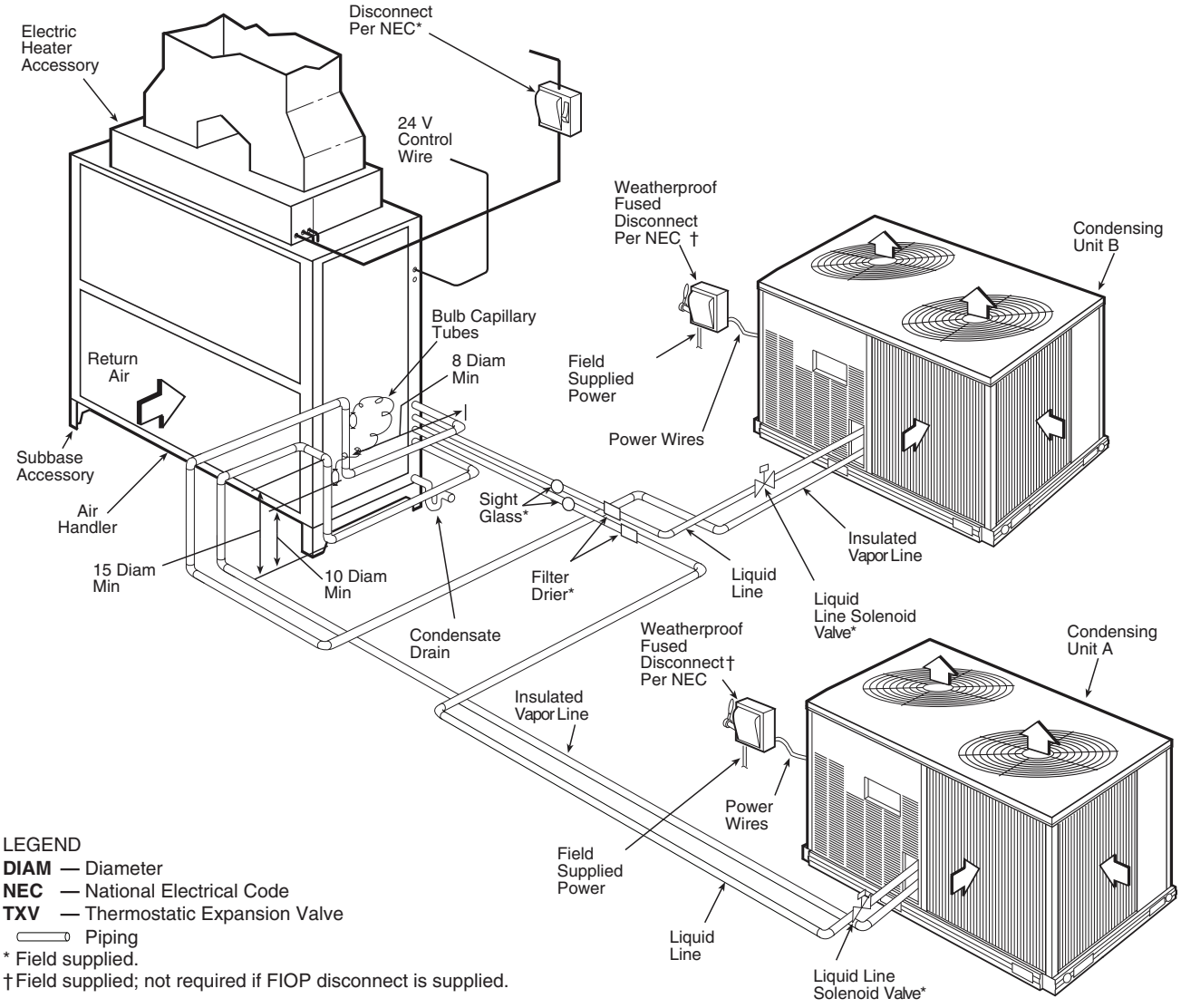

LEGEND
DIAM — Diameter
NEC — National Electrical Code
TXV — Thermostatic Expansion Valve
Piping
* Field supplied.
† Field supplied; not required if FIOP disconnect is supplied.

NOTES:
1. All piping must follow standard refrigerant piping techniques.
2. All wiring must comply with applicable local and national codes.
3. Wiring and piping shown are general points-of-connection guides only and are not intended for, or to include all details for, a specific installation.
4. Liquid line solenoid valve (solenoid drop control) is recommended to prevent refrigerant migration to the compressor on line links above 75 feet.
5. Condensing Unit A should be the first on, last off and be connected to the lower half of the coil.
6. Internal factory-supplied TXVs and check valves not shown.

Performance data

CAS072 Total Unit — Condenser Only Ratings — 60 Hz

CAS072							
SST (°F)		Air Temperature Entering Condenser (°F)					
		85	95	100	105	115	125
20	TC	45.9	42.9	41.3	39.7	36.3	32.6
	kW	4.1	4.7	5.1	5.4	6.3	7.3
	SDT	103.5	113.2	118.1	123.0	132.9	142.7
25	TC	50.7	47.5	45.8	44.1	40.5	36.6
	kW	4.2	4.8	5.1	5.5	6.3	7.3
	SDT	104.9	114.6	119.5	124.3	134.2	143.9
30	TC	56.0	52.5	50.7	48.9	45.0	40.9
	kW	4.2	4.8	5.2	5.5	6.4	7.3
	SDT	106.4	116.0	120.9	125.7	135.4	145.0
35	TC	61.6	57.9	56.0	54.0	49.9	45.5
	kW	4.3	4.9	5.2	5.6	6.4	7.4
	SDT	108.1	117.6	122.4	127.1	136.7	146.2
40	TC	67.7	63.7	61.6	59.5	55.1	50.5
	kW	4.3	4.9	5.3	5.6	6.5	7.4
	SDT	109.7	119.1	123.9	128.6	138.0	147.3
45	TC	74.3	69.9	67.7	65.4	60.7	55.8
	kW	4.4	5.0	5.3	5.7	6.5	7.4
	SDT	111.5	120.8	125.5	130.2	139.4	148.5
50	TC	81.3	76.6	74.2	71.8	66.8	61.6
	kW	4.5	5.1	5.4	5.8	6.6	7.5
	SDT	113.4	122.6	127.2	131.8	140.8	149.7

CAS091 Total Unit — Condenser Only Ratings — 60 Hz

CAS091							
SST (°F)		Air Temperature Entering Condenser (°F)					
		85	95	100	105	115	125
20	TC	60.3	56.3	54.2	52.1	47.7	43.2
	kW	5.4	6.0	6.4	6.8	7.6	8.5
	SDT	99.4	108.5	113.0	117.5	126.4	135.2
25	TC	67.0	62.6	60.3	57.9	53.1	48.1
	kW	5.5	6.1	6.5	6.9	7.7	8.6
	SDT	100.8	109.8	114.2	118.7	127.5	136.2
30	TC	74.2	69.3	66.8	64.2	58.9	53.4
	kW	5.6	6.2	6.6	7.0	7.8	8.7
	SDT	102.3	111.2	115.6	120.0	128.7	137.3
35	TC	81.8	76.5	73.7	70.9	65.1	59.0
	kW	5.7	6.3	6.7	7.1	7.9	8.8
	SDT	103.9	112.7	117.0	121.4	130.0	138.4
40	TC	90.0	84.1	81.1	78.0	71.7	65.0
	kW	5.8	6.5	6.8	7.2	8.0	9.0
	SDT	105.6	114.2	118.5	122.8	131.3	139.6
45	TC	98.6	92.2	88.9	85.6	78.6	71.3
	kW	5.9	6.6	7.0	7.3	8.2	9.1
	SDT	107.4	115.9	120.1	124.3	132.7	140.8
50	TC	107.8	100.8	97.2	93.5	86.0	78.1
	kW	6.1	6.7	7.1	7.5	8.3	9.2
	SDT	109.2	117.6	121.8	125.9	134.1	142.1

LEGEND

kW — Compressor Motor Power Input
SDT — Saturated Discharge Temperature (°F)
SST — Saturated Suction Temperature
TC — Total Capacity (1000 Btuh) gross

Performance data (cont)

CAS121 Total Unit — Condenser Only Ratings — 60 Hz

CAS121							
SST (°F)		Air Temperature Entering Condenser (°F)					
		85	95	100	105	115	125
20	TC	75.6	69.3	66.1	63.0	57.1	52.0
	kW	7.2	8.0	8.4	8.9	10.0	11.1
	SDT	106.0	114.6	118.8	123.0	131.6	140.1
25	TC	84.0	77.3	73.9	70.5	64.1	58.3
	kW	7.3	8.1	8.6	9.0	10.1	11.2
	SDT	108.0	116.4	120.6	124.8	133.2	141.6
30	TC	92.8	85.8	82.1	78.5	71.4	65.0
	kW	7.5	8.3	8.7	9.2	10.2	11.3
	SDT	110.0	118.4	122.5	126.6	134.9	143.0
35	TC	102.2	94.7	90.8	86.9	79.2	72.0
	kW	7.7	8.5	8.9	9.4	10.4	11.5
	SDT	112.1	120.4	124.5	128.5	136.6	144.5
40	TC	112.1	104.0	99.8	95.6	87.3	79.3
	kW	7.9	8.7	9.1	9.5	10.5	11.6
	SDT	114.3	122.4	126.4	130.4	138.3	146.0
45	TC	122.5	113.8	109.3	104.8	95.8	87.0
	kW	8.1	8.9	9.3	9.8	10.7	11.8
	SDT	116.6	124.6	128.5	132.4	140.1	147.6
50	TC	133.4	124.0	119.2	114.3	104.5	94.9
	kW	8.3	9.1	9.5	10.0	10.9	11.9
	SDT	118.9	126.7	130.6	134.4	141.8	149.1

CAS123 Circuit A and B Unit — Condenser Only Ratings — 60 Hz

CAS123 Total Unit							
SST (°F)		Air Temperature Entering Condenser (°F)					
		85	95	100	105	115	125
20	TC	76.8	71.7	69.1	66.4	60.9	55.2
	kW	6.9	7.7	8.2	8.7	9.8	11.0
	SDT	100.8	109.8	114.3	118.8	127.5	136.3
25	TC	84.9	79.5	76.7	73.8	67.8	61.6
	kW	7.0	7.9	8.4	8.9	9.9	11.1
	SDT	102.5	111.4	115.8	120.2	129.0	137.5
30	TC	93.7	87.8	84.7	81.6	75.2	68.5
	kW	7.2	8.0	8.5	9.0	10.1	11.3
	SDT	104.2	113.0	117.4	121.8	130.4	138.9
35	TC	103.0	96.6	93.2	89.8	82.8	75.5
	kW	7.3	8.2	8.7	9.2	10.3	11.4
	SDT	106.1	114.8	119.1	123.3	131.8	140.1
40	TC	113.0	105.9	102.3	98.6	90.9	83.0
	kW	7.5	8.4	8.9	9.4	10.4	11.6
	SDT	108.1	116.6	120.9	125.1	133.4	141.5
45	TC	123.5	115.7	111.8	107.8	99.6	90.9
	kW	7.7	8.6	9.0	9.6	10.6	11.8
	SDT	110.2	118.6	122.8	126.9	135.2	143.1
50	TC	134.5	126.0	121.7	117.4	108.1	98.7
	kW	7.9	8.8	9.2	9.8	10.8	12.0
	SDT	112.4	120.6	124.7	128.8	136.7	144.5

LEGEND

kW — Compressor Motor Power Input
SDT — Saturated Discharge Temperature (°F)
SST — Saturated Suction Temperature
TC — Total Capacity (1000 Btuh) gross

Performance data (cont)

CAS151 Total Unit — Condenser Only Ratings — 60 Hz

CAS151							
SST (°F)		Air Temperature Entering Condenser (°F)					
		85	95	100	105	115	125
20	TC	88.6	81.9	78.4	74.8	67.3	59.4
	kW	8.3	9.4	10.0	10.6	11.9	13.3
	SDT	103.8	112.6	116.9	121.2	129.6	137.7
25	TC	98.7	91.6	87.9	84.1	76.2	67.8
	kW	8.4	9.6	10.2	10.8	12.2	13.6
	SDT	105.8	114.5	118.8	123.0	131.3	139.4
30	TC	109.4	101.9	98.0	93.9	85.5	76.6
	kW	8.6	9.8	10.4	11.1	12.4	13.8
	SDT	107.9	116.5	120.8	124.9	133.1	141.0
35	TC	120.8	112.8	108.6	104.3	95.3	85.9
	kW	8.8	10.0	10.6	11.3	12.7	14.1
	SDT	110.2	118.7	122.8	126.9	135.0	142.7
40	TC	132.9	124.3	119.8	115.2	105.6	95.5
	kW	9.1	10.3	10.9	11.5	12.9	14.3
	SDT	112.5	120.9	125.0	129.1	136.9	144.5
45	TC	145.6	136.4	131.6	126.6	116.4	105.6
	kW	9.4	10.5	11.2	11.8	13.2	14.6
	SDT	115.0	123.2	127.3	131.2	138.9	146.3
50	TC	158.9	149.0	143.8	138.5	127.5	116.0
	kW	9.7	10.8	11.5	12.1	13.5	14.9
	SDT	117.6	125.6	129.6	133.5	141.0	148.1

CAS153 Circuit A and B Unit — Condenser Only Ratings — 60 Hz

CAS153 Total Unit							
SST (°F)		Air Temperature Entering Condenser (°F)					
		85	95	100	105	115	125
20	TC	88.2	82.0	78.7	75.1	68.0	60.4
	kW	8.4	9.6	10.2	10.9	12.3	13.9
	SDT	101.5	110.5	115.0	119.4	128.1	136.6
25	TC	98.0	91.2	87.7	84.0	76.5	68.4
	kW	8.5	9.7	10.3	11.0	12.5	14.1
	SDT	103.2	112.1	116.5	120.9	129.5	137.9
30	TC	108.3	101.1	97.3	93.5	85.4	76.8
	kW	8.7	9.8	10.5	11.2	12.6	14.2
	SDT	104.9	113.8	118.2	122.5	131.0	139.3
35	TC	119.4	111.6	107.5	103.4	94.9	85.9
	kW	8.8	10.0	10.6	11.3	12.8	14.4
	SDT	106.8	115.5	119.9	124.2	132.6	140.8
40	TC	131.1	122.8	118.4	114.0	105.0	95.1
	kW	9.0	10.2	10.8	11.5	13.0	14.5
	SDT	108.7	117.4	121.7	125.9	134.2	142.2
45	TC	143.6	134.6	129.8	125.1	115.4	104.7
	kW	9.2	10.4	11.0	11.7	13.1	14.7
	SDT	110.8	119.3	123.5	127.7	135.9	143.7
50	TC	156.5	146.8	141.8	136.6	126.1	114.8
	kW	9.4	10.6	11.2	11.9	13.3	14.9
	SDT	112.9	121.3	125.5	129.5	137.6	145.2

LEGEND

kW — Compressor Motor Power Input
SDT — Saturated Discharge Temperature (°F)
SST — Saturated Suction Temperature
TC — Total Capacity (1000 Btuh) gross

Performance data (cont)

CAS181 Total Unit — Condenser Only Ratings — 60 Hz

CAS181							
SST (°F)		Air Temperature Entering Condenser (°F)					
		80	85	95	105	115	125
20	TC	125.5	121.8	114.2	106.6	99.7	79.7
	kW	10.5	11.2	12.6	14.2	16.0	17.5
	SDT	98.6	103.4	113.0	122.7	134.9	136.0
25	TC	138.7	134.7	126.5	118.1	109.3	98.5
	kW	10.7	11.4	12.8	14.3	16.0	17.9
	SDT	100.0	104.7	114.2	123.6	132.9	140.5
30	TC	152.9	148.6	139.8	130.7	120.9	104.9
	kW	10.9	11.6	13.0	14.6	16.2	17.8
	SDT	101.4	106.2	115.5	125.0	133.6	139.4
35	TC	168.2	163.5	154.1	144.2	133.6	121.2
	kW	11.2	11.8	13.2	14.8	16.5	18.1
	SDT	102.9	107.5	117.0	126.2	134.8	142.1
40	TC	184.9	179.4	169.3	158.7	147.6	135.1
	kW	11.5	12.0	13.5	15.1	16.8	18.5
	SDT	105.2	108.9	118.5	127.7	136.7	144.5
45	TC	202.1	196.7	185.7	174.3	162.5	150.4
	kW	11.7	12.4	13.9	15.6	17.5	19.6
	SDT	106.4	111.2	120.9	130.7	140.4	150.2
50	TC	220.6	214.7	202.1	190.0	174.6	159.6
	kW	11.9	12.6	13.9	15.4	16.9	18.5
	SDT	107.2	111.7	120.4	129.4	136.9	144.9

CAS183 Circuit A and B Unit — Condenser Only Ratings — 60 Hz

CAS183 Total Unit							
SST (°F)		Air Temperature Entering Condenser (°F)					
		85	95	100	105	115	125
20	TC	126.1	118.2	114.1	110.0	101.6	93.1
	kW	11.2	12.5	13.3	14.1	15.8	17.7
	SDT	102.2	111.3	115.9	120.4	129.4	138.3
25	TC	138.7	130.1	125.7	121.3	112.1	102.8
	kW	11.4	12.8	13.5	14.3	16.0	18.0
	SDT	103.9	113.0	117.5	122.0	130.9	139.6
30	TC	152.3	143.0	138.2	133.3	123.4	113.2
	kW	11.7	13.1	13.8	14.6	16.3	18.3
	SDT	105.7	114.7	119.2	123.6	132.4	141.0
35	TC	166.9	156.7	151.5	146.2	135.3	124.3
	kW	12.0	13.4	14.1	14.9	16.7	18.6
	SDT	107.6	116.5	120.9	125.3	134.0	142.5
40	TC	182.4	171.3	165.6	159.9	148.1	136.0
	kW	12.3	13.7	14.5	15.3	17.0	18.9
	SDT	109.7	118.5	122.8	127.2	135.7	144.1
45	TC	199.0	186.9	180.7	174.4	161.6	148.4
	kW	12.7	14.1	14.8	15.6	17.4	19.3
	SDT	111.8	120.5	124.8	129.1	137.5	145.7
50	TC	216.6	203.3	196.6	189.7	175.7	161.3
	kW	13.1	14.5	15.2	16.1	17.8	19.7
	SDT	114.1	122.7	126.9	131.2	139.4	147.3

LEGEND

kW — Compressor Motor Power Input
SDT — Saturated Discharge Temperature (°F)
SST — Saturated Suction Temperature
TC — Total Capacity (1000 Btuh) gross

Performance data (cont)

CAS241 Total Unit — Condenser Only Ratings — 60 Hz

CAS241							
SST (°F)		Air Temperature Entering Condenser (°F)					
		80	85	95	105	115	125
20	TC	159.2	154.5	144.5	133.9	122.5	110.2
	kW	13.0	13.7	15.3	17.1	19.2	21.5
	SDT	97.3	101.8	110.6	119.3	127.9	136.5
25	TC	176.1	171.0	160.2	148.8	136.5	123.2
	kW	13.2	14.0	15.6	17.4	19.5	21.8
	SDT	98.9	103.3	112.0	120.7	129.2	137.6
30	TC	194.2	188.6	176.9	164.5	151.3	136.9
	kW	13.5	14.3	15.9	17.7	19.7	22.0
	SDT	100.6	104.9	113.6	122.1	130.5	138.8
35	TC	213.5	207.4	194.7	181.2	166.8	151.2
	kW	13.8	14.6	16.2	18.0	20.0	22.3
	SDT	102.4	106.7	115.2	123.6	131.9	140.1
40	TC	234.1	227.4	213.5	198.8	183.1	166.1
	kW	14.2	14.9	16.5	18.3	20.3	22.6
	SDT	104.3	108.5	116.9	125.2	133.3	141.4
45	TC	255.9	248.6	233.3	217.3	200.1	181.7
	kW	14.6	15.3	16.9	18.7	20.7	22.9
	SDT	106.3	110.5	118.7	126.8	134.9	142.7
50	TC	279.0	270.9	254.2	236.7	218.1	197.8
	kW	15.1	15.8	17.3	19.1	21.1	23.2
	SDT	108.5	112.5	120.6	128.6	136.5	144.1

CAS243 Circuit A and B Unit — Condenser Only Ratings — 60 Hz

CAS243 Total Unit							
SST (°F)		Air Temperature Entering Condenser (°F)					
		85	95	100	105	115	125
20	TC	161.4	150.4	144.6	138.7	127.0	115.4
	kW	13.6	15.2	16.0	16.9	18.9	21.1
	SDT	100.8	109.7	114.1	118.4	127.2	135.9
25	TC	178.1	166.4	160.2	153.9	141.1	128.4
	kW	13.9	15.5	16.3	17.2	19.1	21.3
	SDT	102.5	111.3	115.6	119.9	128.5	137.1
30	TC	195.8	183.2	176.5	169.7	155.8	141.9
	kW	14.2	15.8	16.6	17.5	19.4	21.6
	SDT	104.2	112.8	117.2	121.5	130.0	138.4
35	TC	214.5	200.8	193.6	186.3	171.2	155.9
	kW	14.6	16.1	16.9	17.8	19.7	21.9
	SDT	106.1	114.6	118.9	123.1	131.5	139.7
40	TC	233.9	219.3	211.5	203.5	187.1	170.3
	kW	14.9	16.5	17.3	18.2	20.1	22.2
	SDT	108.0	116.5	120.7	124.8	133.1	141.1
45	TC	254.5	238.5	230.0	221.3	203.4	184.9
	kW	15.4	16.9	17.7	18.6	20.5	22.5
	SDT	110.1	118.4	122.6	126.6	134.7	142.6
50	TC	275.8	258.3	249.0	239.5	219.8	199.4
	kW	15.8	17.3	18.2	19.0	20.9	22.9
	SDT	112.3	120.5	124.5	128.5	136.4	144.0

LEGEND

kW — Compressor Motor Power Input
SDT — Saturated Discharge Temperature (°F)
SST — Saturated Suction Temperature
TC — Total Capacity (1000 Btuh) gross

Performance data (cont)

CAS303 Circuit A and B Unit — Condenser Only Ratings — 60 Hz

CAS303 Total Unit							
SST (°F)		Air Temperature Entering Condenser (°F)					
		85	95	100	105	115	125
20	TC	193.2	180.1	173.1	165.9	150.5	134.0
	kW	17.6	19.5	20.5	21.6	24.0	26.6
	SDT	104.0	112.6	116.9	121.2	129.6	137.7
25	TC	212.9	198.9	191.5	183.8	167.6	150.3
	kW	18.0	19.9	21.0	22.1	24.5	27.1
	SDT	106.0	114.5	118.8	123.0	131.3	139.3
30	TC	233.6	218.6	210.7	202.5	185.3	166.9
	kW	18.5	20.4	21.5	22.6	25.0	27.6
	SDT	108.1	116.5	120.7	124.9	133.0	140.9
35	TC	255.4	239.1	230.6	221.8	203.3	183.7
	kW	19.0	21.0	22.1	23.2	25.6	28.2
	SDT	110.3	118.6	122.7	126.8	134.8	142.6
40	TC	278.0	260.3	251.1	241.5	221.7	200.6
	kW	19.6	21.6	22.6	23.8	26.2	28.8
	SDT	112.7	120.8	124.9	128.8	136.7	144.2
45	TC	301.4	282.0	271.9	261.6	240.0	217.2
	kW	20.2	22.2	23.3	24.4	26.8	29.4
	SDT	115.1	123.1	127.0	130.9	138.6	145.9
50	TC	325.3	304.0	292.9	281.6	258.1	233.3
	kW	20.9	22.9	23.9	25.1	27.4	30.0
	SDT	117.7	125.4	129.3	133.1	140.5	147.6

LEGEND

kW — Compressor Motor Power Input
SDT — Saturated Discharge Temperature (°F)
SST — Saturated Suction Temperature
TC — Total Capacity (1000 Btuh) gross

Performance data (cont)

CAS072/FAX072 Stage 2 Combination Ratings — 60 Hz

CAS072/FAX072				AMBIENT TEMPERATURE (°F)														
				85			95			105			115			125		
				EA (db)			EA (db)			EA (db)			EA (db)			EA (db)		
				75	80	85	75	80	85	75	80	85	75	80	85	75	80	85
1800 cfm	EA (wb)	58	THC	61.4	61.4	67.0	58.8	58.8	66.4	57.3	57.3	61.7	54.2	54.2	61.2	51.5	51.5	58.3
			SHC	52.1	59.5	67.0	51.1	58.8	66.4	48.1	54.9	61.7	47.1	54.2	61.2	44.8	51.5	58.3
		62	THC	64.9	64.9	64.9	62.3	62.3	62.3	59.4	59.4	60.4	56.3	56.3	58.9	52.9	52.9	57.1
			SHC	46.8	54.9	62.9	45.5	53.6	61.7	44.2	52.3	60.4	42.8	50.8	58.9	41.1	49.1	57.1
		67	THC	70.7	70.7	70.7	67.8	67.8	67.8	64.7	64.7	64.7	61.4	61.4	61.4	57.8	57.8	57.8
			SHC	38.4	46.4	54.3	37.2	45.2	53.2	35.9	43.9	51.9	34.6	42.6	50.7	33.1	41.1	49.2
		72	THC	77.3	77.3	77.3	74.3	74.3	74.3	70.9	70.9	70.9	67.1	67.1	67.1	63.2	63.2	63.2
			SHC	30.5	38.0	45.5	29.2	36.9	44.6	27.9	35.6	43.4	26.4	34.3	42.2	25.0	32.9	40.9
		76	THC	—	83.3	83.3	—	79.6	79.6	—	76.1	76.1	—	72.2	72.2	—	67.9	67.9
			SHC	—	31.0	40.9	—	29.9	39.8	—	28.5	38.4	—	27.5	37.4	—	26.2	33.7
2100 cfm	EA (wb)	58	THC	65.3	65.3	68.4	61.8	61.8	69.8	59.3	59.3	67.0	56.7	56.7	64.1	53.8	53.8	60.9
			SHC	53.8	61.1	68.4	53.7	61.8	69.8	51.6	59.3	67.0	49.3	56.7	64.1	46.8	53.8	60.9
		62	THC	66.8	66.8	68.4	64.0	64.0	67.0	61.0	61.0	65.5	57.8	57.8	63.7	54.5	54.5	61.6
			SHC	50.0	59.2	68.4	48.6	57.8	67.0	47.2	56.3	65.5	45.6	54.7	63.7	43.8	52.7	61.6
		67	THC	72.5	72.5	72.5	69.6	69.6	69.6	66.4	66.4	66.4	63.0	63.0	63.0	59.2	59.2	59.2
			SHC	40.4	49.5	58.6	39.2	48.3	57.5	37.9	47.1	56.3	36.5	45.7	54.9	35.0	44.3	53.5
		72	THC	79.3	79.3	79.3	75.9	75.9	75.9	72.4	72.4	72.4	68.7	68.7	68.7	64.6	64.6	64.6
			SHC	31.1	39.9	48.7	29.9	38.8	47.7	28.5	37.5	46.6	27.1	36.2	45.3	25.6	34.8	43.9
		76	THC	—	85.3	85.3	—	81.7	81.7	—	77.7	77.7	—	73.7	73.7	—	69.1	69.1
			SHC	—	31.8	43.4	—	30.9	42.5	—	29.7	37.7	—	28.5	37.1	—	27.1	36.1
2400 cfm	EA (wb)	58	THC	66.4	66.4	75.1	64.1	64.1	72.4	61.5	61.5	69.5	58.8	58.8	66.4	55.8	55.8	63.1
			SHC	57.8	66.4	75.1	55.7	64.1	72.4	53.5	61.5	69.5	51.1	58.8	66.4	48.6	55.8	63.1
		62	THC	68.3	68.3	73.3	65.4	65.4	71.8	62.4	62.4	69.9	59.1	59.1	67.5	56.3	56.3	64.1
			SHC	52.8	63.1	73.3	51.4	61.6	71.8	49.8	59.9	69.9	47.8	57.6	67.5	45.4	54.7	64.1
		67	THC	74.1	74.1	74.1	71.0	71.0	71.0	67.7	67.7	67.7	64.1	64.1	64.1	60.2	60.2	60.2
			SHC	42.3	52.5	62.7	41.0	51.3	61.5	39.8	50.0	60.3	38.3	48.5	58.8	36.9	47.2	57.5
		72	THC	80.8	80.8	80.8	77.3	77.3	77.3	73.8	73.8	73.8	69.9	69.9	69.9	65.7	65.7	65.7
			SHC	31.7	41.8	51.8	30.5	40.6	50.7	29.1	39.3	49.5	27.7	37.9	48.1	26.2	36.5	46.7
		76	THC	—	86.7	86.7	—	83.0.	83.0	—	79.0	79.0	—	74.7	74.7	—	70.1	70.1
			SHC	—	33.0	41.4	—	31.9	41.2	—	30.6	40.3	—	29.3	39.3	—	27.9	38.1
2700 cfm	EA (wb)	58	THC	68.5	68.5	77.4	66.0	66.0	74.6	63.3	63.3	71.6	60.5	60.5	68.4	57.5	57.5	65.0
			SHC	59.6	68.5	77.4	57.4	66.0	74.6	55.1	63.3	71.6	52.7	60.5	68.4	50.0	57.5	65.0
		62	THC	69.6	69.6	77.6	66.8	66.8	75.6	63.6	63.6	73.6	60.6	60.6	71.0	57.8	57.8	66.3
			SHC	55.4	66.5	77.6	53.7	64.6	75.6	52.0	62.8	73.6	50.0	60.5	71.0	47.0	56.6	66.3
		67	THC	75.3	75.3	75.3	72.1	72.1	72.1	68.8	68.8	68.8	65.1	65.1	65.1	61.1	61.1	61.3
			SHC	44.0	55.3	66.6	42.8	54.1	65.5	41.5	52.9	64.2	40.1	51.5	62.8	38.6	49.9	61.3
		72	THC	82.2	82.2	82.2	78.6	78.6	78.6	74.8	74.8	74.8	70.8	70.8	70.8	66.5	66.5	66.5
			SHC	32.3	43.5	54.6	31.0	42.2	53.5	29.7	41.0	52.2	28.3	39.6	50.9	26.8	38.1	49.4
		76	THC	—	88.1	88.1	—	84.1	84.1	—	80.0	80.0	—	75.6	75.6	—	70.9	70.9
			SHC	—	33.9	44.3	—	32.6	43.4	—	31.4	42.4	—	30.0	41.2	—	28.6	39.9
3000 cfm	EA (wb)	58	THC	70.3	70.3	79.4	67.8	67.8	76.6	65.0	65.0	73.4	62.1	62.1	70.2	58.9	58.9	66.6
			SHC	61.2	70.3	79.4	59.0	67.8	76.6	56.5	65.0	73.4	54.0	62.1	70.2	51.3	58.9	66.6
		62	THC	70.9	70.9	80.6	67.8	67.8	79.6	65.0	65.0	76.3	62.2	62.2	72.4	59.6	59.6	66.0
			SHC	57.3	69.0	80.6	56.1	67.8	79.6	53.7	65.0	76.3	51.1	61.7	72.4	47.2	56.6	66.0
		67	THC	76.4	76.4	76.4	73.1	73.1	73.1	69.6	69.6	69.6	65.9	65.9	66.5	61.8	61.8	64.8
			SHC	45.7	58.1	70.4	44.5	56.9	69.2	43.2	55.6	68.0	41.8	54.1	66.5	40.2	52.5	64.8
		72	THC	83.1	83.1	83.1	79.5	79.5	79.5	75.7	75.7	75.7	71.6	71.6	71.6	67.2	67.2	67.2
			SHC	32.8	45.0	57.3	31.5	43.8	56.1	30.2	42.5	54.8	28.8	41.1	53.4	27.3	39.6	51.9
		76	THC	—	88.9	88.9	—	85.0	85.0	—	80.8	80.8	—	76.4	76.4	—	71.5	71.5
			SHC	—	34.5	46.2	—	33.3	45.3	—	32.0	44.2	—	30.7	43.0	—	29.2	41.6

LEGEND

db — dry bulb
EA — Entering Air (°F)
SHC — Sensible Heat Capacity (1000 Btuh) gross
THC — Total Capacity (1000 Btuh) gross
wb — wet bulb

Performance data (cont)

CAS072/FAX072 Stage 1 Combination Ratings — 60 Hz

CAS072/FAX072				AMBIENT TEMPERATURE (°F)														
				85			95			105			115			125		
				EA (db)			EA (db)			EA (db)			EA (db)			EA (db)		
				75	80	85	75	80	85	75	80	85	75	80	85	75	80	85
1500 cfm	EA (wb)	58	THC	47.0	47.0	53.1	45.4	45.4	51.3	43.5	43.5	49.2	41.4	41.4	46.7	39.0	39.0	44.0
			SHC	41.0	47.0	53.1	39.5	45.4	51.3	37.9	43.5	49.2	36.0	41.4	46.7	33.9	39.0	44.0
		62	THC	49.4	49.4	50.7	47.3	47.3	49.6	44.9	44.9	48.4	42.2	42.2	47.0	39.4	39.4	45.0
			SHC	37.1	43.9	50.7	36.1	42.8	49.6	34.9	41.7	48.4	33.6	40.3	47.0	31.9	38.5	45.0
		67	THC	54.4	54.4	54.4	52.1	52.1	52.1	49.4	49.4	49.4	46.5	46.5	46.5	43.2	43.2	43.2
			SHC	30.4	37.0	43.7	29.4	36.1	42.8	28.3	35.1	41.8	27.1	33.9	40.6	25.8	32.6	39.4
		72	THC	60.0	60.0	60.0	57.4	57.4	57.4	54.4	54.4	54.4	51.2	51.2	51.2	47.7	47.7	47.7
			SHC	23.9	30.3	36.7	22.8	29.3	35.8	21.7	28.3	34.9	20.5	27.1	33.8	19.2	25.9	32.5
		76	THC	—	64.9	64.9	—	61.9	61.9	—	58.7	58.7	—	55.3	55.3	—	51.4	51.4
			SHC	—	24.4	32.6	—	23.6	31.8	—	22.7	30.9	—	21.6	27.7	—	20.4	26.9
1800 cfm	EA (wb)	58	THC	49.9	49.9	56.4	48.2	48.2	54.4	46.1	46.1	52.1	43.8	43.8	49.5	41.2	41.2	46.5
			SHC	43.4	49.9	56.4	41.9	48.2	54.4	40.1	46.1	52.1	38.1	43.8	49.5	35.9	41.2	46.5
		62	THC	51.2	51.2	56.0	49.0	49.0	54.7	46.6	46.6	53.0	44.2	44.2	50.5	41.4	41.4	47.4
			SHC	40.2	48.1	56.0	39.1	46.9	54.7	37.7	45.3	53.0	35.8	43.2	50.5	33.6	40.5	47.4
		67	THC	56.2	56.2	56.2	53.7	53.7	53.7	50.9	50.9	50.9	47.8	47.8	47.8	44.4	44.4	44.4
			SHC	32.4	40.3	48.1	31.4	39.3	47.1	30.3	38.2	46.1	29.1	37.0	44.9	27.8	35.7	43.6
		72	THC	61.7	61.7	61.7	59.0	59.0	59.0	56.0	56.0	56.0	52.5	52.5	52.5	48.8	48.8	48.8
			SHC	24.6	32.2	39.9	23.5	31.3	39.0	22.4	30.2	38.0	21.2	29.0	36.8	19.9	27.7	35.5
		76	THC	—	66.5	66.5	—	63.5	63.5	—	60.2	60.2	—	56.5	56.5	—	52.5	52.5
			SHC	—	25.6	31.9	—	24.7	31.7	—	23.7	31.1	—	22.6	30.2	—	21.3	29.1
2100 cfm	EA (wb)	58	THC	52.2	52.2	59.0	50.3	50.3	56.9	48.2	48.2	54.5	45.7	45.7	51.6	42.9	42.9	48.5
			SHC	45.5	52.2	59.0	43.8	50.3	56.9	42.0	48.2	54.5	39.8	45.7	51.6	37.4	42.9	48.5
		62	THC	52.8	52.8	60.1	50.4	50.4	59.1	48.8	48.8	55.2	46.2	46.2	52.3	43.0	43.0	50.4
			SHC	42.7	51.4	60.1	41.7	50.4	59.1	39.3	47.3	55.2	37.2	44.7	52.3	35.5	43.0	50.4
		67	THC	57.5	57.5	57.5	54.9	54.9	54.9	52.0	52.0	52.0	48.8	48.8	48.8	45.3	45.3	47.5
			SHC	34.2	43.2	52.1	33.2	42.2	51.2	32.1	41.1	50.1	30.9	39.8	48.8	29.5	38.5	47.5
		72	THC	63.0	63.0	63.0	60.2	60.2	60.2	57.0	57.0	57.0	53.5	53.5	53.5	49.7	49.7	49.7
			SHC	25.2	34.0	42.8	24.1	33.0	41.9	23.0	31.9	40.8	21.8	30.7	39.6	20.5	29.4	38.3
		76	THC	—	67.8	67.8	—	64.7	64.7	—	61.3	61.3	—	57.5	57.5	—	53.3	53.3
			SHC	—	26.5	34.8	—	25.6	34.1	—	24.5	33.2	—	23.4	32.2	—	22.1	31.0
2400 cfm	EA (wb)	58	THC	54.2	54.2	61.2	52.2	52.2	58.9	49.9	49.9	56.4	47.3	47.3	53.4	44.4	44.4	50.1
			SHC	47.2	54.2	61.2	45.4	52.2	58.9	43.4	49.9	56.4	41.1	47.3	53.4	38.6	44.4	50.1
		62	THC	54.2	54.2	63.6	52.4	52.4	60.6	50.5	50.5	56.5	47.3	47.3	55.5	44.4	44.4	52.0
			SHC	44.8	54.2	63.6	42.9	51.8	60.6	40.3	48.4	56.5	39.1	47.3	55.5	36.7	44.4	52.0
		67	THC	58.5	58.5	58.5	55.9	55.9	55.9	52.9	52.9	53.9	49.6	49.6	52.6	45.9	45.9	51.0
			SHC	36.0	46.0	56.0	35.0	45.0	55.1	33.8	43.8	53.9	32.6	42.6	52.6	31.1	41.1	51.0
		72	THC	64.0	64.0	64.0	61.1	61.1	61.1	57.8	57.8	57.8	54.3	54.3	54.3	50.3	50.3	50.3
			SHC	25.7	35.7	45.6	24.7	34.6	44.6	23.6	33.5	43.5	22.3	32.3	42.3	21.0	31.0	40.9
		76	THC	—	68.8	68.8	—	65.6	65.6	—	62.1	62.1	—	58.2	58.2	—	53.9	53.9
			SHC	—	27.3	36.8	—	26.3	36.0	—	25.3	35.1	—	24.0	34.0	—	22.7	32.7
2700 cfm	EA (wb)	58	THC	55.8	55.8	63.0	53.7	53.7	60.6	51.3	51.3	57.9	48.5	48.5	54.8	45.5	45.5	51.3
			SHC	48.5	55.8	63.0	46.7	53.7	60.6	44.6	51.3	57.9	42.2	48.5	54.8	39.6	45.5	51.3
		62	THC	55.8	55.8	65.5	54.3	54.3	61.1	51.3	51.3	60.2	48.6	48.6	57.0	45.5	45.5	53.4
			SHC	46.2	55.8	65.5	43.5	52.3	61.1	42.4	51.3	60.2	40.2	48.6	57.0	37.6	45.5	53.4
		67	THC	59.4	59.4	59.7	56.7	56.7	58.6	53.6	53.6	57.6	50.1	50.1	56.0	46.5	46.5	54.2
			SHC	37.6	48.7	59.7	36.6	47.6	58.6	35.5	46.5	57.6	34.1	45.0	56.0	32.6	43.4	54.2
		72	THC	64.9	64.9	64.9	61.8	61.8	61.8	58.6	58.6	58.6	54.9	54.9	54.9	50.9	50.9	50.9
			SHC	26.2	37.2	48.1	25.2	36.1	47.1	24.1	35.0	46.0	22.8	33.8	44.8	21.5	32.4	43.4
		76	THC	—	69.5	69.5	—	66.3	66.3	—	62.7	62.7	—	58.8	58.8	—	54.3	54.3
			SHC	—	27.9	38.6	—	27.0	37.8	—	25.8	36.8	—	24.6	35.6	—	23.3	34.3

LEGEND

db — dry bulb
EA — Entering Air (°F)
SHC — Sensible Heat Capacity (1000 Btuh) gross
THC — Total Capacity (1000 Btuh) gross
wb — wet bulb

Performance data (cont)

CAS091/FAX091 Stage 2 Combination Ratings — 60 Hz

CAS091/FAX091				AMBIENT TEMPERATURE (°F)														
				85			95			105			115			125		
				EA (db)			EA (db)			EA (db)			EA (db)			EA (db)		
				75	80	85	75	80	85	75	80	85	75	80	85	75	80	85
2250 cfm	EA (wb)	58	THC	81.8	81.8	88.9	77.8	77.8	88.1	74.6	74.6	84.5	71.2	71.2	80.7	67.3	67.3	76.3
			SHC	68.8	78.9	88.9	67.5	77.8	88.1	64.7	74.6	84.5	61.8	71.2	80.7	58.4	67.3	76.3
		62	THC	86.3	86.3	86.3	82.9	82.9	82.9	78.3	78.3	80.2	74.3	74.3	78.1	69.1	69.1	75.9
			SHC	61.9	72.9	83.9	60.0	70.8	81.5	58.1	69.2	80.2	56.2	67.2	78.1	54.0	64.9	75.9
		67	THC	94.9	94.9	94.9	90.6	90.6	90.6	86.0	86.0	86.0	81.1	81.1	81.1	75.9	75.9	75.9
			SHC	50.7	61.6	72.5	48.9	59.8	70.7	47.0	58.0	69.0	45.0	56.0	67.0	42.9	53.9	64.9
		72	THC	104.3	104.3	104.3	99.8	99.8	99.8	94.6	94.6	94.6	89.3	89.3	89.3	83.3	83.3	83.3
			SHC	39.8	50.2	60.6	38.0	48.5	59.1	35.9	46.6	57.3	33.9	44.7	55.5	31.7	42.6	53.4
		76	THC	—	112.3	112.3	—	107.3	107.3	—	101.8	101.8	—	95.8	95.8	—	89.1	89.1
			SHC	—	41.2	53.6	—	39.2	51.5	—	37.3	49.6	—	35.4	45.3	—	33.3	43.8
2625 cfm	EA (wb)	58	THC	85.6	85.6	96.9	82.4	82.4	93.3	78.9	78.9	89.3	75.1	75.1	85.0	71.0	71.0	80.4
			SHC	74.3	85.6	96.9	71.5	82.4	93.3	68.5	78.9	89.3	65.1	75.1	85.0	61.6	71.0	80.4
		62	THC	89.4	89.4	92.4	87.6	87.6	87.6	80.9	80.9	88.3	76.3	76.3	85.8	71.4	71.4	82.4
			SHC	66.9	79.7	92.4	63.3	74.7	86.1	63.0	75.6	88.3	60.7	73.2	85.8	58.0	70.2	82.4
		67	THC	98.2	98.2	98.2	93.5	93.5	93.5	88.8	88.8	88.8	83.4	83.4	83.4	77.9	77.9	77.9
			SHC	53.9	66.6	79.2	52.1	64.7	77.4	50.2	62.9	75.6	48.1	60.8	73.5	45.9	58.6	71.3
		72	THC	107.5	107.5	107.5	102.7	102.7	102.7	97.2	97.2	97.2	91.5	91.5	91.5	85.3	85.3	85.3
			SHC	40.9	53.2	65.5	39.1	51.5	63.9	37.0	49.5	62.0	35.0	47.5	60.0	32.7	45.3	57.8
		76	THC	—	115.6	115.6	—	110.1	110.1	—	104.2	104.2	—	97.5	97.5	—	91.0	91.0
			SHC	—	42.3	56.8	—	40.6	51.5	—	38.7	50.5	—	36.6	48.8	—	34.5	46.9
3000 cfm	EA (wb)	58	THC	89.1	89.1	100.8	85.7	85.7	97.0	81.9	81.9	92.7	78.1	78.1	88.4	73.7	73.7	83.4
			SHC	77.3	89.1	100.8	74.4	85.7	97.0	71.1	81.9	92.7	67.8	78.1	88.4	64.0	73.7	83.4
		62	THC	92.9	92.9	96.1	87.3	87.3	97.0	82.9	82.9	94.5	78.0	78.0	91.7	75.0	75.0	83.0
			SHC	69.4	82.8	96.1	69.0	83.0	97.0	66.8	80.7	94.5	64.3	78.0	91.7	59.0	71.0	83.0
		67	THC	100.2	100.2	100.2	95.7	95.7	95.7	90.5	90.5	90.5	85.2	85.2	85.2	79.3	79.3	79.3
			SHC	56.5	70.7	84.8	54.7	68.9	83.1	52.7	66.8	81.0	50.6	64.8	79.0	48.4	62.5	76.7
		72	THC	109.7	109.7	109.7	104.5	104.5	104.5	98.9	98.9	98.9	93.0	93.0	93.0	86.6	86.6	86.6
			SHC	41.7	55.6	69.4	39.8	53.7	67.6	37.8	51.8	65.7	35.7	49.7	63.7	33.5	47.5	61.5
		76	THC	—	117.4	117.4	—	111.8	111.8	—	105.7	105.7	—	99.1	99.1	—	91.8	91.8
			SHC	—	43.4	56.1	—	41.6	54.8	—	39.7	53.2	—	37.6	51.3	—	35.3	49.1
3375 cfm	EA (wb)	58	THC	92.5	92.5	104.6	88.9	88.9	100.6	85.1	85.1	96.3	80.7	80.7	91.3	76.2	76.2	86.2
			SHC	80.4	92.5	104.6	77.3	88.9	100.6	73.9	85.1	96.3	70.1	80.7	91.3	66.2	76.2	86.2
		62	THC	93.8	93.8	106.2	89.5	89.5	103.1	85.3	85.3	99.4	81.8	81.8	92.2	76.3	76.3	89.6
			SHC	75.2	90.7	106.2	72.7	87.9	103.1	69.9	84.6	99.4	65.3	78.8	92.2	62.9	76.3	89.6
		67	THC	102.4	102.4	102.4	97.3	97.3	97.3	92.1	92.1	92.1	86.6	86.6	86.6	80.5	80.5	82.5
			SHC	59.4	75.2	91.0	57.4	73.3	89.1	55.4	71.2	87.0	53.3	69.1	84.8	51.1	66.8	82.5
		72	THC	111.7	111.7	111.7	106.6	106.6	106.6	100.4	100.4	100.4	94.2	94.2	94.2	87.8	87.8	87.8
			SHC	42.6	58.1	73.6	40.8	56.3	71.9	38.6	54.2	69.8	36.4	52.0	67.6	34.2	49.8	65.3
		76	THC	—	119.3	119.3	—	113.2	113.2	—	106.9	106.9	—	100.1	100.1	—	92.8	92.8
			SHC	—	44.4	59.2	—	42.5	57.6	—	40.5	55.8	—	38.3	53.7	—	36.1	51.4
3750 cfm	EA (wb)	58	THC	95.1	95.1	107.6	91.5	91.5	103.5	87.3	87.3	98.8	82.8	82.8	93.6	78.0	78.0	88.3
			SHC	82.7	95.1	107.6	79.5	91.5	103.5	75.9	87.3	98.8	71.9	82.8	93.6	67.8	78.0	88.3
		62	THC	96.5	96.5	108.5	91.5	91.5	107.5	90.1	90.1	94.0	82.9	82.9	97.2	78.1	78.1	91.7
			SHC	77.0	92.8	108.5	75.5	91.5	107.5	68.0	81.0	94.0	68.3	82.8	97.2	64.4	78.1	91.7
		67	THC	103.7	103.7	103.7	98.7	98.7	98.7	93.2	93.2	93.2	87.5	87.5	89.8	82.0	82.0	85.8
			SHC	61.7	78.9	96.1	59.8	76.9	94.1	57.7	74.9	92.1	55.6	72.7	89.8	52.6	69.2	85.8
		72	THC	113.0	113.0	113.0	107.4	107.4	107.4	101.6	101.6	101.6	95.3	95.3	95.3	88.6	88.6	88.6
			SHC	43.2	60.1	77.0	41.2	58.2	75.2	39.2	56.2	73.1	37.1	54.0	70.9	34.8	51.7	68.6
		76	THC	—	120.5	120.5	—	114.3	114.3	—	108.1	108.1	—	100.9	100.9	—	93.6	93.6
			SHC	—	45.1	61.4	—	43.1	59.7	—	41.2	57.8	—	38.9	55.6	—	36.6	53.2

LEGEND

db — dry bulb
EA — Entering Air (°F)
SHC — Sensible Heat Capacity (1000 Btuh) gross
THC — Total Capacity (1000 Btuh) gross
wb — wet bulb

Performance data (cont)

CAS091/FAX091 Stage 1 Combination Ratings — 60 Hz

CAS091/FAX091				AMBIENT TEMPERATURE (°F)														
				85			95			105			115			125		
				EA (db)			EA (db)			EA (db)			EA (db)			EA (db)		
				75	80	85	75	80	85	75	80	85	75	80	85	75	80	85
1900 cfm	EA (wb)	58	THC	58.3	58.3	65.9	55.2	55.2	62.4	51.8	51.8	58.6	48.1	48.1	54.4	44.2	44.2	50.0
			SHC	50.6	58.3	65.9	48.0	55.2	62.4	45.0	51.8	58.6	41.8	48.1	54.4	38.4	44.2	50.0
		62	THC	60.1	60.1	65.1	56.1	56.1	63.1	52.1	52.1	60.0	48.7	48.7	55.1	44.2	44.2	52.0
			SHC	46.7	55.9	65.1	44.8	53.9	63.1	42.3	51.2	60.0	39.0	47.0	55.1	36.5	44.2	52.0
		67	THC	66.6	66.6	66.6	62.4	62.4	62.4	57.7	57.7	57.7	52.6	52.6	52.6	47.3	47.3	48.7
			SHC	37.7	46.9	56.1	36.0	45.3	54.5	34.2	43.4	52.7	32.2	41.5	50.7	30.2	39.5	48.7
		72	THC	73.6	73.6	73.6	69.2	69.2	69.2	64.2	64.2	64.2	58.8	58.8	58.8	53.1	53.1	53.1
			SHC	28.5	37.5	46.5	26.9	35.9	45.0	25.1	34.2	43.2	23.2	32.3	41.4	21.2	30.4	39.5
		76	THC	—	79.6	79.6	—	75.1	75.1	—	69.8	69.8	—	64.0	64.0	—	58.1	58.1
			SHC	—	29.8	40.2	—	28.4	36.4	—	26.7	35.2	—	24.9	33.7	—	23.0	31.9
2250 cfm	EA (wb)	58	THC	61.8	61.8	69.9	58.5	58.5	66.2	54.8	54.8	62.0	50.9	50.9	57.5	46.6	46.6	52.8
			SHC	53.8	61.8	69.9	50.9	58.5	66.2	47.7	54.8	62.0	44.2	50.9	57.5	40.5	46.6	52.8
		62	THC	62.4	62.4	71.4	58.9	58.9	67.7	54.1	54.1	64.2	50.9	50.9	59.8	46.7	46.7	54.8
			SHC	50.5	61.0	71.4	47.8	57.8	67.7	43.9	54.1	64.2	42.0.	50.9	59.8	38.5	46.7	54.8
		67	THC	68.6	68.6	68.6	64.2	64.2	64.2	59.3	59.3	59.3	54.0	54.0	56.4	48.5	48.5	54.2
			SHC	40.4	51.1	61.9	38.7	49.4	60.2	36.8	47.6	58.4	34.9	45.6	56.4	32.8	43.5	54.2
		72	THC	75.6	75.6	75.6	71.0	71.0	71.0	65.9	65.9	65.9	60.2	60.2	60.2	54.3	54.3	54.3
			SHC	29.5	40.0	50.5	27.9	38.4	49.0	26.0	36.7	47.3	24.1	34.8	45.4	22.1	32.8	43.4
		76	THC	—	81.6	81.6	—	76.9	76.9	—	71.4	71.4	—	65.5	65.5	—	59.2	59.2
			SHC	—	31.1	40.8	—	29.6	39.6	—	27.9	38.1	—	26.0	36.4	—	24.1	34.5
2650 cfm	EA (wb)	58	THC	65.0	65.0	73.5	61.5	61.5	69.5	57.6	57.6	65.1	53.3	53.3	60.3	48.8	48.8	55.2
			SHC	56.6	65.0	73.5	53.5	61.5	69.5	50.1	57.6	65.1	46.4	53.3	60.3	42.4	48.8	55.2
		62	THC	65.1	65.1	76.4	61.6	61.6	72.3	57.6	57.6	67.7	53.4	53.4	62.7	48.9	48.9	57.4
			SHC	53.8	65.1	76.4	50.9	61.6	72.3	47.6	57.6	67.7	44.1	53.4	62.7	40.3	48.9	57.4
		67	THC	70.3	70.3	70.3	65.7	65.7	66.4	60.7	60.7	64.4	55.2	55.2	62.3	49.6	49.6	59.6
			SHC	43.2	55.7	68.1	41.5	54.0	66.4	39.7	52.0	64.4	37.6	50.0	62.3	35.4	47.5	59.6
		72	THC	77.3	77.3	77.3	72.6	72.6	72.6	67.2	67.2	67.2	61.4	61.4	61.4	55.3	55.3	55.3
			SHC	30.4	42.6	54.8	28.8	41.0	53.3	27.0	39.3	51.6	25.1	37.4	49.7	23.0	35.3	47.6
		76	THC	—	83.3	83.3	—	78.4	78.4	—	72.8	72.8	—	66.7	66.7	—	60.1	60.1
			SHC	—	32.2	43.9	—	30.7	42.6	—	29.0	41.0	—	27.1	39.2	—	25.1	37.2
3000 cfm	EA (wb)	58	THC	67.3	67.3	76.1	63.7	63.7	72.0	59.6	59.6	67.3	55.1	55.1	62.3	50.4	50.4	56.9
			SHC	58.6	67.3	76.1	55.4	63.7	72.0	51.8	59.6	67.3	47.9	55.1	62.3	43.8	50.4	56.9
		62	THC	66.8	66.8	79.1	63.7	63.7	74.8	59.6	59.6	70.0	55.2	55.2	64.8	50.5	50.5	59.3
			SHC	54.5	66.8	79.1	52.7	63.7	74.8	49.3	59.6	70.0	45.6	55.2	64.8	41.7	50.5	59.3
		67	THC	71.4	71.4	73.3	66.7	66.7	71.5	61.6	61.6	69.4	56.0	56.0	66.7	51.1	51.1	63.0
			SHC	45.6	59.5	73.3	43.9	57.7	71.5	42.0	55.7	69.4	39.7	53.2	66.7	37.2	50.1	63.0
		72	THC	78.4	78.4	78.4	73.6	73.6	73.6	68.1	68.1	68.1	62.2	62.2	62.2	56.0	56.0	56.0
			SHC	31.1	44.8	58.4	29.5	43.2	56.9	27.7	41.4	55.1	25.8	39.5	53.2	23.8	37.4	51.1
		76	THC	—	84.4	84.4	—	79.5	79.5	—	73.7	73.7	—	67.4	67.4	—	60.8	60.8
			SHC	—	33.0	46.3	—	31.5	44.9	—	29.8	43.2	—	27.9	41.3	—	25.9	39.3
3400 cfm	EA (wb)	58	THC	69.5	69.5	78.5	65.8	65.8	74.3	61.4	61.4	69.4	56.8	56.8	64.2	51.9	51.9	58.6
			SHC	60.5	69.5	78.5	57.3	65.8	74.3	53.5	61.4	69.4	49.4	56.8	64.2	45.1	51.9	58.6
		62	THC	69.6	69.6	81.6	65.8	65.8	77.2	61.5	61.5	72.1	56.8	56.8	66.7	51.9	51.9	60.9
			SHC	57.5	69.6	81.6	54.4	65.8	77.2	50.8	61.5	72.1	47.0	56.8	66.7	42.9	51.9	60.9
		67	THC	72.4	72.4	78.7	67.7	67.7	76.9	62.5	62.5	74.5	57.2	57.2	70.9	52.1	52.1	64.7
			SHC	48.1	63.4	78.7	46.4	61.6	76.9	44.4	59.4	74.5	41.8	56.4	70.9	38.1	51.4	64.7
		72	THC	79.4	79.4	79.4	74.5	74.5	74.5	69.0	69.0	69.0	62.9	62.9	62.9	56.6	56.6	56.6
			SHC	31.8	47.0	62.3	30.2	45.5	60.7	28.5	43.7	59.0	26.6	41.8	57.0	24.6	39.7	54.9
		76	THC	—	85.5	85.5	—	80.4	80.4	—	74.6	74.6	—	68.2	68.2	—	61.3	61.3
			SHC	—	33.8	48.7	—	32.2	47.2	—	30.5	45.5	—	28.6	43.6	—	26.5	41.5

LEGEND

db — dry bulb
EA — Entering Air (°F)
SHC — Sensible Heat Capacity (1000 Btuh) gross
THC — Total Capacity (1000 Btuh) gross
wb — wet bulb

Performance data (cont)

CAS121/FAX120 Stage 2 Combination Ratings — 60 Hz

CAS121/FAX120				AMBIENT TEMPERATURE (°F)														
				85			95			105			115			125		
				EA (db)			EA (db)			EA (db)			EA (db)			EA (db)		
				75	80	85	75	80	85	75	80	85	75	80	85	75	80	85
3000 cfm	EA (wb)	58	THC	107.1	107.1	118.6	102.2	102.2	115.5	97.6	97.6	110.3	92.6	92.6	104.7	87.4	87.4	98.8
			SHC	91.8	105.2	118.6	88.9	102.2	115.5	84.9	97.6	110.3	80.5	92.6	104.7	76.0	87.4	98.8
		62	THC	112.1	112.1	112.9	106.7	106.7	110.3	100.7	100.7	107.4	94.6	94.6	104.3	88.3	88.3	100.9
			SHC	82.9	97.9	112.9	80.4	95.4	110.3	77.6	92.5	107.4	74.6	89.5	104.3	71.5	86.2	100.9
		67	THC	122.5	122.5	122.5	116.8	116.8	116.8	110.2	110.2	110.2	103.3	103.3	103.3	96.1	96.1	96.1
			SHC	68.0	82.8	97.7	65.6	80.5	95.4	62.9	77.8	92.8	60.0	75.0	90.0	57.2	72.2	87.2
		72	THC	134.5	134.5	134.5	127.7	127.7	127.7	120.7	120.7	120.7	113.0	113.0	113.0	105.1	105.1	105.1
			SHC	53.2	67.5	81.9	50.6	65.1	79.6	47.9	62.5	77.2	45.0	59.8	74.5	42.1	56.9	71.7
		76	THC	—	144.5	144.5	—	137.3	137.3	—	129.5	129.5	—	121.4	121.4	—	112.8	112.8
			SHC	—	54.4	70.9	—	52.2	68.7	—	49.8	61.2	—	47.3	60.8	—	44.5	58.7
3500 cfm	EA (wb)	58	THC	111.9	111.9	126.5	107.4	107.4	121.3	102.4	102.4	115.7	97.0	97.0	109.7	91.4	91.4	103.3
			SHC	97.3	111.9	126.5	93.4	107.4	121.3	89.0	102.4	115.7	84.4	97.0	109.7	79.5	91.4	103.3
		62	THC	115.3	115.3	123.1	109.9	109.9	120.3	103.7	103.7	117.0	98.2	98.2	110.2	92.3	92.3	104.5
			SHC	88.9	106.0	123.1	86.3	103.3	120.3	83.2	100.1	117.0	78.5	94.4	110.2	74.2	89.4	104.5
		67	THC	125.9	125.9	125.9	119.9	119.9	119.9	112.8	112.8	112.8	105.5	105.5	105.5	98.1	98.1	98.1
			SHC	71.8	89.0	106.2	69.4	86.6	103.8	66.6	83.8	101.1	63.7	81.0	98.3	60.8	78.1	95.3
		72	THC	137.9	137.9	137.9	130.7	130.7	130.7	123.2	123.2	123.2	115.2	115.2	115.2	107.0	107.0	107.0
			SHC	54.6	71.3	88.1	51.9	68.8	85.7	49.1	66.1	83.1	46.2	63.3	80.4	43.3	60.5	77.6
		76	THC	—	147.8	147.8	—	140.3	140.3	—	132.2	132.2	—	123.8	123.8	—	—	—
			SHC	—	56.6	75.9	—	54.3	69.3	—	51.7	67.5	—	49.1	65.4	—	—	—
4000 cfm	EA (wb)	58	THC	116.5	116.5	131.7	111.7	111.7	126.2	106.4	106.4	120.2	100.6	100.6	113.7	94.6	94.6	106.9
			SHC	101.4	116.5	131.7	97.1	111.7	126.2	92.5	106.4	120.2	87.5	100.6	113.7	82.3	94.6	106.9
		62	THC	118.2	118.2	132.2	112.6	112.6	129.0	107.2	107.2	121.7	101.5	101.5	114.9	94.7	94.7	111.1
			SHC	94.3	113.2	132.2	91.4	110.2	129.0	86.4	104.1	121.7	81.6	98.2	114.9	78.3	94.7	111.1
		67	THC	128.6	128.6	128.6	122.0	122.0	122.0	114.9	114.9	114.9	107.4	107.4	107.4	99.6	99.6	103.2
			SHC	75.6	95.0	114.4	73.0	92.4	111.9	70.2	89.6	109.1	67.3	86.7	106.2	64.3	83.7	103.2
		72	THC	140.1	140.1	140.1	133.0	133.0	133.0	125.2	125.2	125.2	117.0	117.0	117.0	108.6	108.6	108.6
			SHC	55.7	74.7	93.8	53.1	72.3	91.4	50.3	69.5	88.8	47.4	66.7	86.0	44.5	63.9	83.2
		76	THC	—	150.5	150.5	—	142.9	142.9	—	134.6	134.6	—	—	—	—	—	—
			SHC	—	58.5	75.9	—	56.1	74.1	—	53.5	71.9	—	—	—	—	—	—
4500 cfm	EA (wb)	58	THC	120.3	120.3	136	115.4	115.4	130.4	109.6	109.6	123.8	103.6	103.6	117.1	97.3	97.3	109.9
			SHC	104.7	120.3	136	100.4	115.4	130.4	95.3	109.6	123.8	90.2	103.6	117.1	84.6	97.3	109.9
		62	THC	121.6	121.6	138.7	116.5	116.5	131.3	110.4	110.4	125.9	103.6	103.6	121.6	97.3	97.3	114.2
			SHC	98.4	118.5	138.7	93.4	112.3	131.3	89.3	107.6	125.9	85.6	103.6	121.6	80.4	97.3	114.2
		67	THC	130.4	130.4	130.4	123.8	123.8	123.8	116.7	116.7	116.9	108.6	108.6	113.6	100.8	100.8	110.4
			SHC	78.9	100.5	122.1	76.4	98.0	119.6	73.7	95.3	116.9	70.6	92.1	113.6	67.5	89.0	110.4
		72	THC	142.0	142.0	142.0	134.8	134.8	134.8	126.8	126.8	126.8	118.4	118.4	118.4	109.8	109.8	109.8
			SHC	56.8	78.1	99.3	54.2	75.6	96.9	51.4	72.8	94.3	48.6	70.0	91.5	45.6	67.1	88.6
		76	THC	—	152.2	152.2	—	144.5	144.5	—	135.9	135.9	—	—	—	—	—	—
			SHC	—	59.9	80.0	—	57.5	78.0	—	54.9	75.7	—	—	—	—	—	—
5000 cfm	EA (wb)	58	THC	123.6	123.6	139.7	118.5	118.5	133.9	112.4	112.4	127.0	106.2	106.2	120.0	99.5	99.5	112.5
			SHC	107.6	123.6	139.7	103.1	118.5	133.9	97.8	112.4	127.0	92.4	106.2	120.0	86.6	99.5	112.5
		62	THC	123.7	123.7	145.2	119.9	119.9	133.8	112.6	112.6	132.2	106.3	106.3	124.7	99.6	99.6	116.9
			SHC	102.3	123.7	145.2	95.4	114.6	133.8	93.1	112.6	132.2	87.8	106.3	124.7	82.3	99.6	116.9
		67	THC	132.1	132.1	132.1	125.2	125.2	127.0	117.7	117.7	123.9	109.9	109.9	121.2	101.9	101.9	117.3
			SHC	82.3	105.9	129.6	79.7	103.4	127.0	76.8	100.3	123.9	74.0	97.6	121.2	70.7	94.0	117.3
		72	THC	143.7	143.7	143.7	136.3	136.3	136.3	128.1	128.1	128.1	119.6	119.6	119.6	110.7	110.7	110.7
			SHC	57.8	81.3	104.7	55.3	78.8	102.2	52.5	76.0	99.6	49.6	73.2	96.8	46.7	70.3	93.9
		76	THC	—	154.1	154.1	—	146.1	146.1	—	—	—	—	—	—	—	—	—
			SHC	—	61.4	83.9	—	58.9	81.8	—	—	—	—	—	—	—	—	—

LEGEND

db — dry bulb
EA — Entering Air (°F)
SHC — Sensible Heat Capacity (1000 Btuh) gross
THC — Total Capacity (1000 Btuh) gross
wb — wet bulb

Performance data (cont)

CAS121/FAX120 Stage 1 Combination Ratings — 60 Hz

CAS121/FAX120				AMBIENT TEMPERATURE (°F)														
				85			95			105			115			125		
				EA (db)			EA (db)			EA (db)			EA (db)			EA (db)		
				75	80	85	75	80	85	75	80	85	75	80	85	75	80	85
2500 cfm	EA (wb)	58	THC	74.8	74.8	84.8	70.2	70.2	79.5	65.4	65.4	74.0	60.2	60.2	68.2	55.0	55.0	62.3
			SHC	64.9	74.8	84.8	60.9	70.2	79.5	56.7	65.4	74.0	52.2	60.2	68.2	47.7	55.0	62.3
		62	THC	76.2	76.2	85.8	71.0	71.0	81.5	64.5	64.5	76.7	60.3	60.3	71.0	55.1	55.1	64.8
			SHC	60.7	73.3	85.8	57.3	69.4	81.5	52.3	64.5	76.7	49.6	60.3	71.0	45.3	55.1	64.8
		67	THC	84.7	84.7	84.7	78.4	78.4	78.4	71.6	71.6	71.6	64.6	64.6	66.8	57.5	57.5	64.0
			SHC	49.1	61.8	74.5	46.6	59.3	72.1	44.0	56.7	69.4	41.3	54.0	66.8	38.6	51.3	64.0
		72	THC	94.1	94.1	94.1	87.6	87.6	87.6	80.5	80.5	80.5	72.9	72.9	72.9	—	—	—
			SHC	37.1	49.6	62.0	34.8	47.3	59.8	32.2	44.8	57.4	29.6	42.2	54.8	—	—	—
		76	THC	—	102.3	102.3	—	—	—	—	—	—	—	—	—	—	—	—
			SHC	—	39.6	50.4	—	—	—	—	—	—	—	—	—	—	—	—
3000 cfm	EA (wb)	58	THC	79.8	79.8	90.4	74.9	74.9	84.8	69.6	69.6	78.8	64.0	64.0	72.5	58.3	58.3	66.0
			SHC	69.2	79.8	90.4	65.0	74.9	84.8	60.4	69.6	78.8	55.5	64.0	72.5	50.6	58.3	66.0
		62	THC	80.6	80.6	92.5	73.5	73.5	87.8	69.6	69.6	81.9	64.1	64.1	75.4	58.3	58.3	68.6
			SHC	65.1	78.8	92.5	59.2	73.5	87.8	57.3	69.6	81.9	52.7	64.1	75.4	48.0	58.3	68.6
		67	THC	87.3	87.3	87.3	80.8	80.8	80.8	73.7	73.7	78.0	66.4	66.4	75.0	59.1	59.1	71.7
			SHC	53.1	68.2	83.2	50.6	65.7	80.7	47.9	63.0	78.0	45.1	60.1	75.0	42.2	57.0	71.7
		72	THC	96.7	96.7	96.7	90.2	90.2	90.2	82.6	82.6	82.6	—	—	—	—	—	—
			SHC	38.7	53.5	68.3	36.4	51.3	66.1	33.8	48.7	63.7	—	—	—	—	—	—
		76	THC	—	—	—	—	—	—	—	—	—	—	—	—	—	—	—
			SHC	—	—	—	—	—	—	—	—	—	—	—	—	—	—	—
3500 cfm	EA (wb)	58	THC	83.8	83.8	94.9	78.6	78.6	89.0	73.0	73.0	82.6	67.1	67.1	75.9	60.9	60.9	68.9
			SHC	72.7	83.8	94.9	68.2	78.6	89.0	63.4	73.0	82.6	58.2	67.1	75.9	52.8	60.9	68.9
		62	THC	83.9	83.9	98.7	78.7	78.7	92.5	73.1	73.1	85.9	67.1	67.1	78.9	60.9	60.9	71.7
			SHC	69.1	83.9	98.7	64.8	78.7	92.5	60.2	73.1	85.9	55.3	67.1	78.9	50.2	60.9	71.7
		67	THC	89.3	89.3	91.5	82.6	82.6	88.8	75.4	75.4	85.8	68.0	68.0	82.3	61.7	61.7	75.2
			SHC	56.9	74.2	91.5	54.3	71.6	88.8	51.6	68.7	85.8	48.6	65.4	82.3	44.3	59.7	75.2
		72	THC	98.7	98.7	98.7	91.8	91.8	91.8	—	—	—	—	—	—	—	—	—
			SHC	40.1	57.3	74.4	37.8	55.0	72.1	—	—	—	—	—	—	—	—	—
		76	THC	—	—	—	—	—	—	—	—	—	—	—	—	—	—	—
			SHC	—	—	—	—	—	—	—	—	—	—	—	—	—	—	—
4000 cfm	EA (wb)	58	THC	87.1	87.1	98.5	81.6	81.6	92.4	75.7	75.7	85.7	69.5	69.5	78.6	63.0	63.0	71.3
			SHC	75.6	87.1	98.5	70.9	81.6	92.4	65.8	75.7	85.7	60.3	69.5	78.6	54.7	63.0	71.3
		62	THC	87.1	87.1	102.5	81.7	81.7	96.1	75.8	75.8	89.1	69.5	69.5	81.8	63.0	63.0	74.1
			SHC	71.8	87.1	102.5	67.4	81.7	96.1	62.5	75.8	89.1	57.3	69.5	81.8	51.9	63.0	74.1
		67	THC	90.9	90.9	99.1	84.1	84.1	96.3	76.9	76.9	92.8	69.9	69.9	86.9	—	—	—
			SHC	60.4	79.7	99.1	57.8	77.1	96.3	54.8	73.8	92.8	50.9	68.9	86.9	—	—	—
		72	THC	100.1	100.1	100.1	93.2	93.2	93.2	—	—	—	—	—	—	—	—	—
			SHC	41.4	60.8	80.1	39.2	58.5	77.9	—	—	—	—	—	—	—	—	—
		76	THC	—	—	—	—	—	—	—	—	—	—	—	—	—	—	—
			SHC	—	—	—	—	—	—	—	—	—	—	—	—	—	—	—
4500 cfm	EA (wb)	58	THC	89.7	89.7	101.5	84.2	84.2	95.2	78.1	78.1	88.3	71.6	71.6	81.0	—	—	—
			SHC	77.9	89.7	101.5	73.1	84.2	95.2	67.8	78.1	88.3	62.2	71.6	81.0	—	—	—
		62	THC	89.8	89.8	105.6	84.2	84.2	99.0	78.1	78.1	91.8	71.6	71.6	84.2	—	—	—
			SHC	74.0	89.8	105.6	69.4	84.2	99.0	64.4	78.1	91.8	59.0	71.6	84.2	—	—	—
		67	THC	92.1	92.1	106.1	85.3	85.3	102.9	79.1	79.1	95.4	72.3	72.3	87.4	—	—	—
			SHC	63.6	84.9	106.1	60.9	81.9	102.9	56.4	75.9	95.4	51.7	69.5	87.4	—	—	—
		72	THC	101.3	101.3	101.3	—	—	—	—	—	—	—	—	—	—	—	—
			SHC	42.7	64.2	85.7	—	—	—	—	—	—	—	—	—	—	—	—
		76	THC	—	—	—	—	—	—	—	—	—	—	—	—	—	—	—
			SHC	—	—	—	—	—	—	—	—	—	—	—	—	—	—	—

LEGEND

db — dry bulb
EA — Entering Air (°F)
SHC — Sensible Heat Capacity (1000 Btuh) gross
THC — Total Capacity (1000 Btuh) gross
wb — wet bulb

Performance data (cont)

CAS123/FAX120 Stage 3 Combination Ratings — 60 Hz

CAS123/FAX120				AMBIENT TEMPERATURE (°F)														
				85			95			105			115			125		
				EA (db)			EA (db)			EA (db)			EA (db)			EA (db)		
				75	80	85	75	80	85	75	80	85	75	80	85	75	80	85
3000 cfm	EA (wb)	58	THC	100.7	100.7	111.7	96.2	96.2	109.6	92.4	92.4	105.3	88.4	88.4	100.7	83.9	83.9	95.6
			SHC	85.0	98.3	111.7	82.8	96.2	109.6	79.6	92.4	105.3	76.1	88.4	100.7	72.3	83.9	95.6
		62	THC	109.8	109.8	109.8	101.9	101.9	103.8	96.9	96.9	101.4	91.5	91.5	99.0	85.8	85.8	96.2
			SHC	75.3	89.3	103.3	74.4	89.1	103.8	72.1	86.7	101.4	69.7	84.3	99.0	67.1	81.6	96.2
		67	THC	118.9	118.9	118.9	113.6	113.6	113.6	107.9	107.9	107.9	101.9	101.9	101.9	95.4	95.4	95.4
			SHC	62.7	77.3	92.0	60.7	75.3	90.0	58.4	73.1	87.9	56.1	70.8	85.6	53.6	68.4	83.1
		72	THC	132.3	132.3	132.3	126.3	126.3	126.3	120.1	120.1	120.1	113.4	113.4	113.4	106.2	106.2	106.2
			SHC	49.1	63.2	77.2	46.8	61.1	75.3	44.6	59.0	73.3	42.2	56.7	71.2	39.7	54.3	68.8
		76	THC	—	144.0	144.0	—	137.6	137.6	—	130.7	130.7	—	123.3	123.3	—	115.2	115.2
			SHC	—	51.2	67.7	—	49.2	65.7	—	47.4	63.9	—	45.2	58.3	—	42.8	56.7
3500 cfm	EA (wb)	58	THC	106.1	106.1	120.7	102.3	102.3	116.4	98.2	98.2	111.7	93.7	93.7	106.6	88.9	88.9	101.1
			SHC	91.5	106.1	120.7	88.3	102.3	116.4	84.7	98.2	111.7	80.8	93.7	106.6	76.6	88.9	101.1
		62	THC	110.6	110.6	116.6	105.7	105.7	114.3	100.4	100.4	111.8	94.9	94.9	108.6	89.6	89.6	103.8
			SHC	83.0	99.8	116.6	80.8	97.6	114.3	78.4	95.1	111.8	75.6	92.1	108.6	72.1	87.9	103.8
		67	THC	122.8	122.8	122.8	117.1	117.1	117.1	111.2	111.2	111.2	104.8	104.8	104.8	98.0	98.0	98.0
			SHC	67.2	84.0	100.9	65.0	81.9	98.8	62.7	79.7	96.6	60.3	77.2	94.2	57.8	74.7	91.7
		72	THC	136.2	136.2	136.2	129.7	129.7	129.7	123.4	123.4	123.4	116.4	116.4	116.4	108.8	108.8	108.8
			SHC	51.0	67.4	83.9	48.6	65.2	81.8	46.4	63.1	79.7	44.0	60.8	77.5	41.4	58.2	75.0
		76	THC	—	148.0	148.0	—	141.1	141.1	—	133.8	133.8	—	126.1	126.1	—	117.8	117.8
			SHC	—	53.8	73.1	—	51.9	66.5	—	49.7	65.2	—	47.4	63.4	—	44.9	61.3
4000 cfm	EA (wb)	58	THC	111.5	111.5	126.7	107.3	107.3	122.0	102.9	102.9	116.9	98.1	98.1	111.5	92.9	92.9	105.5
			SHC	96.3	111.5	126.7	92.7	107.3	122.0	88.9	102.9	116.9	84.8	98.1	111.5	80.2	92.9	105.5
		62	THC	114.1	114.1	126.5	109.0	109.0	123.6	103.7	103.7	120.5	99.2	99.2	113.1	93.0	93.0	109.9
			SHC	89.1	107.8	126.5	86.6	105.1	123.6	83.9	102.2	120.5	79.1	96.1	113.1	76.2	93.0	109.9
		67	THC	126.0	126.0	126.0	119.9	119.9	119.9	113.8	113.8	113.8	107.1	107.1	107.1	100.0	100.0	100.0
			SHC	71.3	90.3	109.4	69.0	88.1	107.1	66.7	85.8	104.8	64.3	83.3	102.4	61.6	80.7	99.7
		72	THC	139.4	139.4	139.4	132.7	132.7	132.7	125.9	125.9	125.9	118.5	118.5	118.5	110.7	110.7	110.7
			SHC	52.7	71.4	90.0	50.4	69.1	87.9	48.1	66.9	85.7	45.6	64.5	83.4	43.0	61.9	80.9
		76	THC	—	151.1	151.1	—	143.7	143.7	—	136.3	136.3	—	128.3	128.3	—	119.7	119.7
			SHC	—	56.0	73.1	—	53.9	71.6	—	51.7	69.8	—	49.3	67.7	—	46.7	65.4
4500 cfm	EA (wb)	58	THC	116.0	116.0	131.7	111.6	111.6	126.7	106.9	106.9	121.3	101.8	101.8	115.5	96.2	96.2	109.2
			SHC	100.4	116.0	131.7	96.5	111.6	126.7	92.4	106.9	121.3	88.0	101.8	115.5	83.2	96.2	109.2
		62	THC	117.1	117.1	134.4	112.0	112.0	131.3	107.3	107.3	125.6	102.1	102.1	119.9	96.3	96.3	113.6
			SHC	94.0	114.2	134.4	91.4	111.4	131.3	87.5	106.6	125.6	83.4	101.7	119.9	79.0	96.3	113.6
		67	THC	129.3	129.3	129.3	123.0	123.0	123.0	115.7	115.7	115.7	108.9	108.9	110.2	102.2	102.2	109.3
			SHC	76.1	97.7	119.3	73.8	95.4	117.0	70.4	91.5	112.7	68.0	89.1	110.2	66.2	87.8	109.3
		72	THC	141.7	141.7	141.7	135.0	135.0	135.0	127.9	127.9	127.9	120.4	120.4	120.4	112.3	112.3	112.3
			SHC	54.1	75.0	95.8	51.9	72.8	93.7	49.5	70.5	91.4	47.0	68.0	89.1	44.4	65.4	86.5
		76	THC	—	153.3	153.3	—	146.1	146.1	—	138.3	138.3	—	130.1	130.1	—	121.2	121.2
			SHC	—	57.9	77.6	—	55.7	75.8	—	53.4	73.8	—	51.0	71.6	—	48.4	69.2
5000 cfm	EA (wb)	58	THC	120.0	120.0	136.1	115.2	115.2	130.7	110.3	110.3	125.1	104.9	104.9	119.0	99.1	99.1	112.4
			SHC	103.9	120.0	136.1	99.8	115.2	130.7	95.5	110.3	125.1	90.9	104.9	119.0	85.8	99.1	112.4
		62	THC	120.9	120.9	138.7	115.5	115.5	136.1	111.0	111.0	128.8	105.0	105.0	123.8	99.2	99.2	116.9
			SHC	97.3	118.0	138.7	94.8	115.5	136.1	90.1	109.4	128.8	86.2	105.0	123.8	81.5	99.2	116.9
		67	THC	130.3	130.3	130.3	124.0	124.0	124.0	117.4	117.4	120.2	110.4	110.4	117.4	103.0	103.0	114.5
			SHC	78.8	101.9	125.1	76.5	99.6	122.7	74.0	97.1	120.2	71.4	94.4	117.4	68.7	91.6	114.5
		72	THC	143.7	143.7	143.7	136.7	136.7	136.7	129.4	129.4	129.4	121.9	121.9	121.9	113.6	113.6	113.6
			SHC	55.5	78.4	101.3	53.2	76.2	99.1	50.8	73.8	96.8	48.4	71.4	94.5	45.7	68.8	91.8
		76	THC	—	155.5	155.5	—	147.7	147.7	—	139.6	139.6	—	131.4	131.4	—	122.5	122.5
			SHC	—	59.6	81.6	—	57.2	79.6	—	54.9	77.5	—	52.5	75.2	—	49.9	72.7

LEGEND

db — dry bulb
EA — Entering Air (°F)
SHC — Sensible Heat Capacity (1000 Btuh) gross
THC — Total Capacity (1000 Btuh) gross
wb — wet bulb

Performance data (cont)

CAS123/FAX120 Stage 2 Combination Ratings — 60 Hz

CAS123/FAX120				AMBIENT TEMPERATURE (°F)														
				85			95			105			115			125		
				EA (db)			EA (db)			EA (db)			EA (db)			EA (db)		
				75	80	85	75	80	85	75	80	85	75	80	85	75	80	85
2500 cfm	EA (wb)	58	THC	88.4	88.4	97.2	84.8	84.8	94.5	81.1	81.1	90.3	76.4	76.4	86.4	71.7	71.7	81.1
			SHC	75.2	86.2	97.2	72.9	83.7	94.5	69.7	80.0	90.3	66.4	76.4	86.4	62.4	71.7	81.1
		62	THC	93.1	93.1	93.1	88.6	88.6	90.3	83.9	83.9	87.0	79.1	79.1	83.2	73.5	73.5	79.7
			SHC	68.3	80.4	92.6	66.1	78.2	90.3	63.3	75.1	87.0	60.2	71.7	83.2	57.2	68.4	79.7
		67	THC	102.6	102.6	102.6	97.7	97.7	97.7	92.4	92.4	92.4	86.6	86.6	86.6	80.1	80.1	80.1
			SHC	56.4	68.5	80.5	54.4	66.5	78.6	52.2	64.4	76.5	49.9	62.0	74.2	47.3	59.5	71.7
		72	THC	113.1	113.1	113.1	107.9	107.9	107.9	101.9	101.9	101.9	95.5	95.5	95.5	88.5	88.5	88.5
			SHC	44.7	56.0	67.3	42.6	54.2	65.7	40.3	52.0	63.8	37.9	49.8	61.7	35.3	47.3	59.4
		76	THC	—	122.2	122.2	—	116.4	116.4	—	110.3	110.3	—	—	—	—	—	—
			SHC	—	46.2	57.8	—	44.2	56.5	—	41.8	54.3	—	—	—	—	—	—
3000 cfm	EA (wb)	58	THC	93.6	93.6	105.3	89.8	89.8	101.3	85.7	85.7	96.8	81.2	81.2	91.7	76.1	76.1	86.0
			SHC	81.2	93.3	105.3	78.0	89.7	101.3	74.6	85.7	96.8	70.6	81.2	91.7	66.3	76.1	86.0
		62	THC	96.9	96.9	101.0	95.4	95.4	95.4	87.7	87.7	95.0	82.5	82.5	91.1	76.8	76.8	86.7
			SHC	73.4	87.2	101.0	69.0	82.0	94.9	68.3	81.6	95.0	65.1	78.1	91.1	61.6	74.2	86.7
		67	THC	106.2	106.2	106.2	101.0	101.0	101.0	95.4	95.4	95.4	89.2	89.2	89.2	82.5	82.5	82.5
			SHC	60.5	74.7	89.0	58.4	72.7	87.0	56.2	70.5	84.8	53.7	68.1	82.5	51.1	65.4	79.8
		72	THC	116.7	116.7	116.7	111.0	111.0	111.0	104.9	104.9	104.9	98.1	98.1	98.1	90.8	90.8	90.8
			SHC	46.2	60.0	73.8	44.1	58.0	72.0	41.8	55.9	70.0	39.4	53.6	67.7	36.8	51.1	65.3
		76	THC	—	126.1	126.1	—	—	—	—	—	—	—	—	—	—	—	—
			SHC	—	47.9	62.7	—	—	—	—	—	—	—	—	—	—	—	—
3500 cfm	EA (wb)	58	THC	98.2	98.2	110.9	94.5	94.5	106.8	89.9	89.9	101.5	84.9	84.9	95.9	79.5	79.5	89.8
			SHC	85.5	98.2	110.9	82.3	94.5	106.8	78.2	89.9	101.5	73.9	84.9	95.9	69.2	79.5	89.8
		62	THC	100.2	100.2	109.2	95.8	95.8	105.7	90.9	90.9	102.0	85.4	85.4	97.8	80.0	80.0	92.2
			SHC	78.4	93.8	109.2	75.6	90.7	105.7	72.6	87.3	102.0	69.3	83.6	97.8	65.3	78.8	92.2
		67	THC	108.9	108.9	108.9	103.7	103.7	103.7	97.6	97.6	97.6	91.0	91.0	91.0	84.0	84.0	87.0
			SHC	64.2	80.6	97.1	62.5	79.1	95.7	59.8	76.2	92.6	57.3	73.6	90.0	54.4	70.7	87.0
		72	THC	119.4	119.4	119.4	113.5	113.5	113.5	107.3	107.3	107.3	100.3	100.3	100.3	—	—	—
			SHC	47.6	63.7	79.7	45.5	61.6	77.8	43.3	59.5	75.7	40.9	57.2	73.5	—	—	—
		76	THC	—	—	—	—	—	—	—	—	—	—	—	—	—	—	—
			SHC	—	—	—	—	—	—	—	—	—	—	—	—	—	—	—
4000 cfm	EA (wb)	58	THC	102.1	102.1	115.3	97.8	97.8	110.5	93.2	93.2	105.2	88	88	99.4	82.3	82.3	92.9
			SHC	88.9	102.1	115.3	85.2	97.8	110.5	81.1	93.2	105.2	76.6	88.0	99.4	71.6	82.3	92.9
		62	THC	103.3	103.3	115.7	98.5	98.5	112.2	93.6	93.6	108.3	88.6	88.6	101.9	82.7	82.7	95.1
			SHC	82.5	99.1	115.7	79.7	96.0	112.2	76.7	92.5	108.3	72.3	87.1	101.9	67.5	81.3	95.1
		67	THC	111.0	111.0	111.0	105.3	105.3	105.3	99.3	99.3	99.9	92.7	92.7	97.0	85.6	85.6	92.6
			SHC	67.7	86.1	104.5	65.5	83.9	102.3	63.2	81.5	99.9	60.5	78.8	97.0	57.1	74.9	92.6
		72	THC	121.5	121.5	121.5	115.5	115.5	115.5	108.7	108.7	108.7	101.6	101.6	101.6	—	—	—
			SHC	48.9	67.1	85.2	46.8	65.1	83.3	44.5	62.8	81.1	42.1	60.4	78.8	—	—	—
		76	THC	—	—	—	—	—	—	—	—	—	—	—	—	—	—	—
			SHC	—	—	—	—	—	—	—	—	—	—	—	—	—	—	—
4500 cfm	EA (wb)	58	THC	105.3	105.3	118.9	100.9	100.9	114.0	96.0	96.0	108.4	90.6	90.6	102.3	84.6	84.6	95.5
			SHC	91.7	105.3	118.9	87.9	100.9	114.0	83.6	96.0	108.4	78.9	90.6	102.3	73.7	84.6	95.5
		62	THC	105.8	105.8	121.7	101.3	101.3	116.9	96.0	96.0	112.6	90.9	90.9	106.3	84.8	84.8	99.3
			SHC	86.3	104.0	121.7	82.9	99.9	116.9	79.5	96.0	112.6	75.2	90.7	106.3	70.2	84.8	99.3
		67	THC	112.5	112.5	112.5	106.8	106.8	109.2	100.6	100.6	106.4	94.7	94.7	102.0	87.3	87.3	96.8
			SHC	70.9	91.2	111.5	68.7	89.0	109.2	66.2	86.3	106.4	63.0	82.5	102.0	59.1	77.9	96.8
		72	THC	123.1	123.1	123.1	117.1	117.1	117.1	110.2	110.2	110.2	—	—	—	—	—	—
			SHC	50.1	70.3	90.5	48.0	68.3	88.5	45.7	66.0	86.3	—	—	—	—	—	—
		76	THC	—	—	—	—	—	—	—	—	—	—	—	—	—	—	—
			SHC	—	—	—	—	—	—	—	—	—	—	—	—	—	—	—

LEGEND

db — dry bulb
EA — Entering Air (°F)
SHC — Sensible Heat Capacity (1000 Btuh) gross
THC — Total Capacity (1000 Btuh) gross
wb — wet bulb

Performance data (cont)

CAS123/FAX120 Stage 1 Combination Ratings — 60 Hz

CAS123/FAX120				AMBIENT TEMPERATURE (°F)														
				85			95			105			115			125		
				EA (db)			EA (db)			EA (db)			EA (db)			EA (db)		
				75	80	85	75	80	85	75	80	85	75	80	85	75	80	85
2500 cfm	EA (wb)	58	THC	34.0	34.0	38.9	32.6	32.6	37.2	30.9	30.9	35.2	29.0	29.0	33.2	26.9	26.9	30.8
			SHC	29.2	34.0	38.9	27.9	32.6	37.2	26.5	30.9	35.2	24.9	29.0	33.2	23.1	26.9	30.8
		62	THC	34.5	34.5	38.6	33.8	33.8	36.3	31.6	31.6	34.2	29.0	29.0	34.6	26.9	26.9	32.0
			SHC	26.7	32.7	38.6	25.4	30.8	36.3	23.9	29.0	34.2	23.4	29.0	34.6	21.8	26.9	32.0
		67	THC	38.4	38.4	38.4	36.3	36.3	36.3	33.9	33.9	33.9	31.4	31.4	32.2	28.5	28.5	31.2
			SHC	21.7	28.1	34.5	21.0	27.4	33.8	19.9	26.0	32.2	19.3	25.7	32.2	18.3	24.7	31.2
		72	THC	43.1	43.1	43.1	40.9	40.9	40.9	38.4	38.4	38.4	35.6	35.6	35.6	32.6	32.6	32.6
			SHC	15.9	22.1	28.3	15.2	21.5	27.7	14.4	20.7	27.1	13.5	19.9	26.4	12.6	19.0	25.5
		76	THC	—	47.3	47.3	—	45.0	45.0	—	42.4	42.4	—	—	—	—	—	—
			SHC	—	17.1	21.9	—	16.5	22.0	—	15.9	21.8	—	—	—	—	—	—
3000 cfm	EA (wb)	58	THC	36.1	36.1	41.2	34.5	34.5	39.3	32.8	32.8	37.3	30.7	30.7	35.0	28.5	28.5	32.4
			SHC	31.1	36.1	41.2	29.7	34.5	39.3	28.2	32.8	37.3	26.4	30.7	35.0	24.5	28.5	32.4
		62	THC	36.4	36.4	41.8	34.7	34.7	40.8	32.8	32.8	38.8	30.7	30.7	36.5	28.5	28.5	33.8
			SHC	28.9	35.4	41.8	28.1	34.4	40.8	26.7	32.8	38.8	25.0	30.7	36.5	23.2	28.5	33.8
		67	THC	39.5	39.5	39.5	37.3	37.3	37.6	35.1	35.1	37.0	32.3	32.3	35.9	29.3	29.3	34.5
			SHC	23.6	30.9	38.2	22.9	30.2	37.6	22.2	29.6	37.0	21.1	28.5	35.9	20.0	27.2	34.5
		72	THC	44.2	44.2	44.2	41.9	41.9	41.9	39.3	39.3	39.3	36.5	36.5	36.5	33.3	33.3	33.3
			SHC	16.7	24.0	31.2	16.0	23.3	30.6	15.2	22.5	29.9	14.3	21.7	29.2	13.3	20.8	28.3
		76	THC	—	48.4	48.4	—	46.0	46.0	—	—	—	—	—	—	—	—	—
			SHC	—	18.2	24.8	—	17.6	24.5	—	—	—	—	—	—	—	—	—
3500 cfm	EA (wb)	58	THC	37.7	37.7	42.9	36.1	36.1	41.0	34.0	34.0	38.7	32.1	32.1	36.5	29.7	29.7	33.8
			SHC	32.5	37.7	42.9	31.1	36.1	41.0	29.4	34.0	38.7	27.7	32.1	36.5	25.6	29.7	33.8
		62	THC	38.4	38.4	41.5	36.1	36.1	42.7	34.2	34.2	40.4	32.1	32.1	38.0	29.7	29.7	35.2
			SHC	29.3	35.4	41.5	29.5	36.1	42.7	27.9	34.2	40.4	26.2	32.1	38.0	24.3	29.7	35.2
		67	THC	40.4	40.4	41.8	38.1	38.1	41.0	35.7	35.7	40.3	32.9	32.9	38.9	30.0	30.0	37.0
			SHC	25.3	33.5	41.8	24.6	32.8	41.0	23.8	32.0	40.3	22.7	30.8	38.9	21.3	29.1	37.0
		72	THC	45.0	45.0	45.0	42.7	42.7	42.7	40.1	40.1	40.1	37.2	37.2	37.2	33.9	33.9	33.9
			SHC	17.4	25.5	33.7	16.7	24.9	33.2	15.9	24.2	32.6	15.0	23.3	31.7	14.0	22.4	30.8
		76	THC	—	49.2	49.2	—	—	—	—	—	—	—	—	—	—	—	—
			SHC	—	19.1	26.9	—	—	—	—	—	—	—	—	—	—	—	—
4000 cfm	EA (wb)	58	THC	39.1	39.1	44.5	37.4	37.4	42.5	35.4	35.4	40.2	33.2	33.2	37.7	30.7	30.7	34.9
			SHC	33.8	39.1	44.5	32.3	37.4	42.5	30.6	35.4	40.2	28.7	33.2	37.7	26.5	30.7	34.9
		62	THC	39.1	39.1	46.2	37.4	37.4	44.2	35.4	35.4	41.8	33.2	33.2	39.2	30.7	30.7	36.3
			SHC	32.0	39.1	46.2	30.6	37.4	44.2	29.0	35.4	41.8	27.2	33.2	39.2	25.2	30.7	36.3
		67	THC	41.0	41.0	45.1	38.8	38.8	44.2	36.3	36.3	43.0	33.6	33.6	41.3	30.8	30.8	38.2
			SHC	26.9	36.0	45.1	26.1	35.2	44.2	25.1	34.0	43.0	23.9	32.6	41.3	22.1	30.2	38.2
		72	THC	45.7	45.7	45.7	43.3	43.3	43.3	40.6	40.6	40.6	37.7	37.7	37.7	34.4	34.4	34.4
			SHC	18.0	27.1	36.3	17.3	26.5	35.7	16.4	25.7	34.9	15.6	24.9	34.2	14.6	23.9	33.1
		76	THC	—	49.9	49.9	—	—	—	—	—	—	—	—	—	—	—	—
			SHC	—	19.8	28.9	—	—	—	—	—	—	—	—	—	—	—	—
4500 cfm	EA (wb)	58	THC	40.3	40.3	45.7	38.5	38.5	43.7	36.4	36.4	41.3	34.1	34.1	38.7	31.6	31.6	35.8
			SHC	34.8	40.3	45.7	33.3	38.5	43.7	31.5	36.4	41.3	29.5	34.1	38.7	27.3	31.6	35.8
		62	THC	40.3	40.3	47.5	38.4	38.4	45.4	36.4	36.4	43.0	34.2	34.2	40.3	31.6	31.6	37.3
			SHC	33.0	40.3	47.5	31.5	38.4	45.4	29.9	36.4	43.0	28.0	34.2	40.3	25.9	31.6	37.3
		67	THC	41.6	41.6	48.0	39.3	39.3	46.9	36.9	36.9	45.3	34.2	34.2	43.3	32.3	32.3	36.7
			SHC	28.4	38.2	48.0	27.5	37.2	46.9	26.4	35.9	45.3	25.0	34.2	43.3	21.8	29.2	36.7
		72	THC	46.2	46.2	46.2	43.8	43.8	43.8	41.1	41.1	41.1	38.1	38.1	38.1	—	—	—
			SHC	18.5	28.5	38.6	17.8	27.9	38.0	16.9	27	37.1	16.2	26.3	36.5	—	—	—
		76	THC	—	—	—	—	—	—	—	—	—	—	—	—	—	—	—
			SHC	—	—	—	—	—	—	—	—	—	—	—	—	—	—	—

LEGEND

db — dry bulb
EA — Entering Air (°F)
SHC — Sensible Heat Capacity (1000 Btuh) gross
THC — Total Capacity (1000 Btuh) gross
wb — wet bulb

Performance data (cont)

CAS151/FAS150 Stage 2 Combination Ratings — 60 Hz

CAS151/FAS150				AMBIENT TEMPERATURE (°F)														
				85			95			105			115			125		
				EA (db)			EA (db)			EA (db)			EA (db)			EA (db)		
				75	80	85	75	80	85	75	80	85	75	80	85	75	80	85
3750 cfm	EA (wb)	58	THC	120.0	120.0	136.9	115.6	115.6	131.9	110.8	110.8	126.5	105.6	105.6	120.5	99.9	99.9	114.0
			SHC	103.0	120.0	136.9	99.3	115.6	131.9	95.2	110.8	126.5	90.7	105.6	120.5	85.8	99.9	114.0
		62	THC	126.4	126.4	132.3	120.3	120.3	129.6	114.0	114.0	126.6	107.1	107.1	123.4	100.8	100.8	117.8
			SHC	93.5	112.9	132.3	90.8	110.2	129.6	88.0	107.3	126.6	84.9	104.1	123.4	80.8	99.3	117.8
		67	THC	141.7	141.7	141.7	135.2	135.2	135.2	128.1	128.1	128.1	120.5	120.5	120.5	112.2	112.2	112.2
			SHC	75.7	95.1	114.4	73.2	92.6	111.9	70.5	89.9	109.3	67.7	87.1	106.6	64.6	84.1	103.5
		72	THC	158.4	158.4	158.4	151.2	151.2	151.2	143.4	143.4	143.4	135.1	135.1	135.1	126.1	126.1	126.1
			SHC	58.0	77.0	95.9	55.5	74.5	93.5	52.7	71.8	91.0	49.8	69.0	88.2	46.8	66.0	85.3
		76	THC	—	172.9	172.9	—	164.9	164.9	—	156.4	156.4	—	147.3	147.3	—	137.6	137.6
			SHC	—	62.1	82.8	—	59.7	76.8	—	57.1	75.1	—	54.4	72.8	—	51.4	70.2
4400 cfm	EA (wb)	58	THC	128.4	128.4	146.3	123.6	123.6	140.8	118.3	118.3	134.8	112.7	112.7	128.3	106.4	106.4	121.2
			SHC	110.6	128.4	146.3	106.4	123.6	140.8	101.9	118.3	134.8	97.0	112.7	128.3	91.7	106.4	121.2
		62	THC	131.4	131.4	147.3	125.1	125.1	144.1	119.2	119.2	139.3	113.8	113.8	131.5	106.6	106.6	126.3
			SHC	102.7	125.0	147.3	99.8	122.0	144.1	96.1	117.7	139.3	91.0	111.3	131.5	86.8	106.6	126.3
		67	THC	146.6	146.6	146.6	139.8	139.8	139.8	132.3	132.3	132.3	124.1	124.1	124.1	115.6	115.6	115.6
			SHC	81.9	104.4	126.9	79.4	101.9	124.4	76.6	99.1	121.7	73.6	96.2	118.7	70.5	93.0	115.6
		72	THC	163.4	163.4	163.4	155.7	155.7	155.7	147.6	147.6	147.6	138.8	138.8	138.8	129.3	129.3	129.3
			SHC	60.7	82.8	105.0	58.0	80.3	102.5	55.2	77.5	99.8	52.3	74.6	97.0	49.2	71.5	93.9
		76	THC	—	177.5	177.5	—	169.1	169.1	—	160.4	160.4	—	151.1	151.1	—	140.7	140.7
			SHC	—	65.3	86.0	—	62.8	84.1	—	60.1	81.7	—	57.3	79.1	—	54.2	76.2
5000 cfm	EA (wb)	58	THC	134.9	134.9	153.4	129.7	129.7	147.5	124.2	124.2	141.2	118.0	118.0	134.3	111.4	111.4	126.7
			SHC	116.4	134.9	153.4	111.9	129.7	147.5	107.1	124.2	141.2	101.8	118.0	134.3	96.1	111.4	126.7
		62	THC	136.5	136.5	156.6	131.0	131.0	151.8	125.8	125.8	143.2	118.2	118.2	139.8	111.6	111.6	132.0
			SHC	108.9	132.8	156.6	105.3	128.6	151.8	99.8	121.5	143.2	96.5	118.2	139.8	91.1	111.6	132.0
		67	THC	150.2	150.2	150.2	143.0	143.0	143.0	135.2	135.2	135.2	126.9	126.9	129.6	117.9	117.9	126.4
			SHC	87.3	112.6	137.9	84.7	110.0	135.3	81.9	107.2	132.6	78.9	104.2	129.6	75.7	101.1	126.4
		72	THC	166.9	166.9	166.9	159.0	159.0	159.0	150.5	150.5	150.5	141.4	141.4	141.4	131.6	131.6	131.6
			SHC	62.8	87.8	112.9	60.1	85.2	110.3	57.3	82.5	107.6	54.3	79.5	104.7	51.1	76.3	101.5
		76	THC	—	180.8	180.8	—	172.4	172.4	—	163.3	163.3	—	153.5	153.5	—	142.9	142.9
			SHC	—	67.7	91.8	—	65.2	89.5	—	62.4	87.0	—	59.5	84.2	—	56.3	81.2
5650 cfm	EA (wb)	58	THC	140.8	140.8	159.9	135.3	135.3	153.7	129.4	129.4	147.0	123.0	123.0	139.7	115.9	115.9	131.6
			SHC	121.7	140.8	159.9	116.9	135.3	153.7	111.8	129.4	147.0	106.2	123.0	139.7	100.1	115.9	131.6
		62	THC	143.0	143.0	162.2	136.9	136.9	156.6	129.5	129.5	153.0	123.1	123.1	145.4	116.0	116.0	137.0
			SHC	113.5	137.9	162.2	109.4	133.0	156.6	106.1	129.5	153.0	100.8	123.1	145.4	95.0	116.0	137.0
		67	THC	153.2	153.2	153.2	145.8	145.8	146.8	137.8	137.8	144.0	129.3	129.3	140.9	119.9	119.9	137.2
			SHC	92.8	121.1	149.5	90.2	118.5	146.8	87.4	115.7	144.0	84.4	112.7	140.9	81.0	109.1	137.2
		72	THC	169.7	169.7	169.7	161.7	161.7	161.7	153.0	153.0	153.0	143.7	143.7	143.7	133.7	133.7	133.7
			SHC	64.7	92.9	121.0	62.1	90.2	118.4	59.3	87.4	115.6	56.3	84.4	112.6	53.1	81.3	109.4
		76	THC	—	183.8	183.8	—	175.1	175.1	—	165.6	165.6	—	155.6	155.6	—	144.7	144.7
			SHC	—	70.0	97.3	—	67.4	94.9	—	64.6	92.2	—	61.6	89.4	—	58.4	86.2
6250 cfm	EA (wb)	58	THC	145.6	145.6	165.2	139.8	139.8	158.6	133.6	133.6	151.6	126.8	126.8	143.9	119.3	119.3	135.4
			SHC	125.9	145.6	165.2	120.9	139.8	158.6	115.6	133.6	151.6	109.7	126.8	143.9	103.2	119.3	135.4
		62	THC	148.5	148.5	165.8	139.9	139.9	165.1	133.7	133.7	157.8	126.9	126.9	149.7	119.5	119.5	141.0
			SHC	116.8	141.3	165.8	114.8	139.9	165.1	109.7	133.7	157.8	104.1	126.9	149.7	98.0	119.5	141.0
		67	THC	155.6	155.6	159.8	147.9	147.9	157.3	139.6	139.6	154.2	130.9	130.9	150.7	121.6	121.6	146.7
			SHC	97.8	128.8	159.8	95.2	126.2	157.3	92.3	123.2	154.2	89.1	119.9	150.7	85.7	116.2	146.7
		72	THC	172.1	172.1	172.1	163.8	163.8	163.8	154.9	154.9	154.9	145.4	145.4	145.4	135.2	135.2	135.2
			SHC	66.4	97.3	128.2	63.8	94.7	125.5	60.9	91.8	122.7	58.0	88.8	119.7	54.8	85.7	116.5
		76	THC	—	186.1	186.1	—	177.2	177.2	—	167.4	167.4	—	156.9	156.9	—	146.1	146.1
			SHC	—	71.9	102.0	—	69.2	99.5	—	66.3	96.7	—	63.2	93.7	—	60.0	90.5

LEGEND

db — dry bulb
EA — Entering Air (°F)
SHC — Sensible Heat Capacity (1000 Btuh) gross
THC — Total Capacity (1000 Btuh) gross
wb — wet bulb

Performance data (cont)

CAS151/FAS150 Stage 1 Combination Ratings — 60 Hz

CAS151/FAS150				AMBIENT TEMPERATURE (°F)														
				85			95			105			115			125		
				EA (db)			EA (db)			EA (db)			EA (db)			EA (db)		
				75	80	85	75	80	85	75	80	85	75	80	85	75	80	85
3750 cfm	EA (wb)	58	THC	77.6	77.6	87.9	73.7	73.7	83.7	69.1	69.1	78.5	64.3	64.3	73.3	59.3	59.3	67.8
			SHC	67.4	77.6	87.9	63.8	73.7	83.7	59.6	69.1	78.5	55.4	64.3	73.3	50.8	59.3	67.8
		62	THC	77.7	77.7	91.4	73.5	73.5	86.7	69.1	69.1	81.8	64.4	64.4	76.4	59.2	59.2	70.5
			SHC	64.0	77.7	91.4	60.3	73.5	86.7	56.5	69.1	81.8	52.4	64.4	76.4	47.9	59.2	70.5
		67	THC	83.0	83.0	83.6	78.1	78.1	81.0	72.6	72.6	78.2	66.8	66.8	75.3	60.7	60.7	72.0
			SHC	52.2	67.9	83.6	49.6	65.3	81.0	46.8	62.5	78.2	43.9	59.6	75.3	40.8	56.4	72.0
		72	THC	91.5	91.5	91.5	86.0	86.0	86.0	80.3	80.3	80.3	74.2	74.2	74.2	67.5	67.5	67.5
			SHC	36.6	52.2	67.8	34.0	49.6	65.2	31.2	46.9	62.5	28.4	44.0	59.6	25.4	41.0	56.6
		76	THC	—	98.8	98.8	—	93.1	93.1	—	86.8	86.8	—	80.5	80.5	—	73.4	73.4
			SHC	—	39.4	54.6	—	36.8	52.0	—	34.1	49.4	—	31.3	46.7	—	28.3	43.7
4400 cfm	EA (wb)	58	THC	81.5	81.5	92.2	77.1	77.1	87.4	72.6	72.6	82.4	67.4	67.4	76.8	62.0	62.0	70.8
			SHC	70.8	81.5	92.2	66.8	77.1	87.4	62.7	72.6	82.4	58.1	67.4	76.8	53.2	62.0	70.8
		62	THC	81.6	81.6	95.9	77.2	77.2	90.9	72.5	72.5	85.7	67.6	67.6	80.1	62.0	62.0	73.7
			SHC	67.2	81.6	95.9	63.4	77.2	90.9	59.4	72.5	85.7	55.1	67.6	80.1	50.3	62.0	73.7
		67	THC	84.8	84.8	93.4	79.5	79.5	90.5	74.3	74.3	87.5	68.2	68.2	84.1	62.1	62.1	79.6
			SHC	56.7	75.1	93.4	54.0	72.2	90.5	51.2	69.4	87.5	48.1	66.1	84.1	44.5	62.0	79.6
		72	THC	93.4	93.4	93.4	87.9	87.9	87.9	81.8	81.8	81.8	75.5	75.5	75.5	68.6	68.6	68.6
			SHC	38.3	56.6	74.9	35.7	54.0	72.3	32.9	51.2	69.4	30.0	48.3	66.6	27.0	45.2	63.5
		76	THC	—	100.5	100.5	—	94.5	94.5	—	88.3	88.3	—	81.4	81.4	—	74.2	74.2
			SHC	—	41.4	59.3	—	38.8	56.7	—	36.0	54.0	—	33.1	51.1	—	30.1	48.0
5000 cfm	EA (wb)	58	THC	84.9	84.9	96.0	80.3	80.3	91.0	75.4	75.4	85.6	70.1	70.1	79.7	64.3	64.3	73.3
			SHC	73.8	84.9	96.0	69.7	80.3	91.0	65.2	75.4	85.6	60.4	70.1	79.7	55.2	64.3	73.3
		62	THC	84.9	84.9	99.7	80.3	80.3	94.5	75.4	75.4	89.0	70.1	70.1	83.0	64.4	64.4	76.5
			SHC	70.1	84.9	99.7	66.1	80.3	94.5	61.8	75.4	89.0	57.2	70.1	83.0	52.3	64.4	76.5
		67	THC	86.3	86.3	102.9	81.1	81.1	99.3	75.9	75.9	93.7	71.2	71.2	86.9	64.6	64.6	81.7
			SHC	61.2	82.0	102.9	58.2	78.7	99.3	54.3	74.0	93.7	50.0	68.5	86.9	46.0	63.9	81.7
		72	THC	94.8	94.8	94.8	89.2	89.2	89.2	83.0	83.0	83.0	76.5	76.5	76.5	69.7	69.7	70.6
			SHC	40.0	61.1	82.2	37.3	58.4	79.5	34.5	55.6	76.7	31.7	52.7	73.6	28.7	49.7	70.6
		76	THC	—	102.1	102.1	—	95.7	95.7	—	89.4	89.4	—	82.4	82.4	—	75.2	75.2
			SHC	—	43.4	64.1	—	40.6	61.3	—	37.9	58.6	—	34.9	55.5	—	31.8	52.4
5650 cfm	EA (wb)	58	THC	87.3	87.3	98.7	82.5	82.5	93.4	77.5	77.5	87.9	71.9	71.9	81.8	66.2	66.2	75.4
			SHC	75.9	87.3	98.7	71.6	82.5	93.4	67.1	77.5	87.9	62.1	71.9	81.8	56.9	66.2	75.4
		62	THC	87.5	87.5	102.7	82.6	82.6	97.2	77.6	77.6	91.5	72.2	72.2	85.4	66.1	66.1	78.4
			SHC	72.2	87.5	102.7	68.0	82.6	97.2	63.6	77.6	91.5	59.0	72.2	85.4	53.7	66.1	78.4
		67	THC	88.2	88.2	108.4	82.9	82.9	103.6	77.6	77.6	98.5	72.3	72.3	90.7	66.1	66.1	84.6
			SHC	64.1	86.2	108.4	60.5	82.0	103.6	56.8	77.6	98.5	51.9	71.3	90.7	47.7	66.1	84.6
		72	THC	95.7	95.7	95.7	90.0	90.0	90.0	83.9	83.9	83.9	77.1	77.1	80.1	70.1	70.1	77.0
			SHC	41.4	65.0	88.6	38.8	62.3	85.9	36.0	59.6	83.2	33.1	56.6	80.1	30.1	53.6	77.0
		76	THC	—	102.8	102.8	—	96.5	96.5	—	90.0	90.0	—	83.0	83.0	—	75.5	75.5
			SHC	—	44.8	68.0	—	42.1	65.3	—	39.3	62.4	—	36.3	59.2	—	33.1	56.0
6250 cfm	EA (wb)	58	THC	89.5	89.5	101.1	84.6	84.6	95.8	79.2	79.2	89.8	73.6	73.6	83.6	67.7	67.7	77.1
			SHC	77.9	89.5	101.1	73.5	84.6	95.8	68.6	79.2	89.8	63.6	73.6	83.6	58.2	67.7	77.1
		62	THC	89.6	89.6	105.1	84.7	84.7	99.6	79.4	79.4	93.6	73.9	73.9	87.4	67.5	67.5	80.1
			SHC	74.1	89.6	105.1	69.8	84.7	99.6	65.2	79.4	93.6	60.5	73.9	87.4	55.0	67.5	80.1
		67	THC	91.3	91.3	110.1	84.9	84.9	106.0	79.5	79.5	100.4	73.7	73.7	93.8	67.6	67.6	86.4
			SHC	65.5	87.8	110.1	62.0	84.0	106.0	58.1	79.2	100.4	53.7	73.7	93.8	48.8	67.6	86.4
		72	THC	96.6	96.6	96.6	90.6	90.6	92.6	84.4	84.4	89.8	77.7	77.7	86.7	70.6	70.6	83.4
			SHC	42.9	69.1	95.3	40.2	66.4	92.6	37.5	63.6	89.8	34.7	60.7	86.7	31.7	57.6	83.4
		76	THC	—	103.6	103.6	—	97.5	97.5	—	90.9	90.9	—	83.7	83.7	—	76.0	76.0
			SHC	—	46.3	72.1	—	43.6	69.3	—	40.7	66.3	—	37.6	63.0	—	34.4	59.7

LEGEND

db — dry bulb
EA — Entering Air (°F)
SHC — Sensible Heat Capacity (1000 Btuh) gross
THC — Total Capacity (1000 Btuh) gross
wb — wet bulb

Performance data (cont)

CAS153/FAS150 Stage 3 Combination Ratings — 60 Hz

CAS153/FAS150				AMBIENT TEMPERATURE (°F)														
				85			95			105			115			125		
				EA (db)			EA (db)			EA (db)			EA (db)			EA (db)		
				75	80	85	75	80	85	75	80	85	75	80	85	75	80	85
3750 cfm	EA (wb)	58	THC	120.2	120.2	137.3	116.0	116.0	132.5	111.1	111.1	127.0	105.9	105.9	121.0	100.5	100.5	114.8
			SHC	103.1	120.2	137.3	99.4	116.0	132.5	95.3	111.1	127.0	90.8	105.9	121.0	86.2	100.5	114.8
		62	THC	127.5	127.5	130.7	121.6	121.6	128.0	115.1	115.1	125.2	108.4	108.4	122.4	101.7	101.7	117.7
			SHC	92.6	111.7	130.7	90.0	109.0	128.0	87.3	106.2	125.2	84.5	103.4	122.4	80.7	99.2	117.7
		67	THC	142.6	142.6	142.6	135.7	135.7	135.7	128.8	128.8	128.8	121.6	121.6	121.6	113.4	113.4	113.4
			SHC	75.1	94.1	113.1	72.3	91.2	110.1	69.8	88.9	107.9	67.1	86.1	105.0	64.0	83.1	102.1
		72	THC	158.8	158.8	158.8	151.4	151.4	151.4	143.9	143.9	143.9	135.7	135.7	135.7	126.8	126.8	126.8
			SHC	57.4	76.0	94.5	54.8	73.5	92.2	52.2	71.0	89.8	49.4	68.1	86.9	46.4	65.2	84.1
		76	THC	—	172.7	172.7	—	164.8	164.8	—	156.3	156.3	—	148.0	148.0	—	138.2	138.2
			SHC	—	60.9	81.5	—	58.7	77.2	—	56.2	73.3	—	53.6	71.3	—	50.7	68.9
4375 cfm	EA (wb)	58	THC	128.4	128.4	146.4	123.7	123.7	141.0	118.4	118.4	135.0	113.0	113.0	128.8	106.6	106.6	121.5
			SHC	110.4	128.4	146.4	106.4	123.7	141.0	101.8	118.4	135.0	97.2	113.0	128.8	91.7	106.6	121.5
		62	THC	132.3	132.3	145.4	126.1	126.1	142.4	119.8	119.8	138.3	113.9	113.9	131.4	107.7	107.7	125.3
			SHC	101.6	123.5	145.4	98.8	120.6	142.4	95.5	116.9	138.3	90.7	111.1	131.4	86.3	105.8	125.3
		67	THC	147.3	147.3	147.3	140.2	140.2	140.2	133.0	133.0	133.0	125.2	125.2	125.2	116.5	116.5	116.5
			SHC	80.9	102.8	124.7	78.4	100.4	122.5	75.7	97.7	119.7	72.6	94.5	116.4	69.8	92.0	114.1
		72	THC	163.6	163.6	163.6	156.3	156.3	156.3	148.0	148.0	148.0	139.4	139.4	139.4	130.2	130.2	130.2
			SHC	60.0	81.7	103.3	57.5	79.1	100.7	54.7	76.5	98.3	51.8	73.6	95.4	48.7	70.5	92.2
		76	THC	—	177.9	177.9	—	169.3	169.3	—	160.4	160.4	—	150.9	150.9	—	141.7	141.7
			SHC	—	64.3	83.8	—	61.8	82.2	—	59.1	79.9	—	56.3	77.4	—	53.5	74.8
5000 cfm	EA (wb)	58	THC	134.8	134.8	153.5	129.4	129.4	147.3	124.2	124.2	141.4	118.2	118.2	134.6	111.7	111.7	127.2
			SHC	116.1	134.8	153.5	111.5	129.4	147.3	107.0	124.2	141.4	101.8	118.2	134.6	96.2	111.7	127.2
		62	THC	136.2	136.2	157.2	130.7	130.7	151.2	124.7	124.7	146.4	117.8	117.8	139.9	111.9	111.9	132.5
			SHC	108.9	133.1	157.2	104.7	127.9	151.2	100.9	123.6	146.4	95.6	117.8	139.9	91.2	111.9	132.5
		67	THC	150.7	150.7	150.7	143.6	143.6	143.6	135.9	135.9	135.9	127.6	127.6	127.6	119.0	119.0	124.9
			SHC	86.2	111.1	135.9	83.4	108.1	132.8	80.7	105.3	130.0	77.6	102.3	126.9	75.0	100.0	124.9
		72	THC	167.2	167.2	167.2	158.8	158.8	158.8	150.5	150.5	150.5	142.0	142.0	142.0	132.4	132.4	132.4
			SHC	62.1	86.5	110.9	59.3	83.6	108.0	56.6	81.3	106.1	53.8	78.3	102.8	50.7	75.4	100.2
		76	THC	—	180.9	180.9	—	172.1	172.1	—	163.4	163.4	—	153.8	153.8	—	143.9	143.9
			SHC	—	66.7	89.7	—	64.1	87.5	—	61.6	85.4	—	58.7	82.8	—	55.8	79.9
5625 cfm	EA (wb)	58	THC	140.5	140.5	159.8	135.2	135.2	153.8	129.3	129.3	147.1	123.1	123.1	140.0	116.0	116.0	132.0
			SHC	121.3	140.5	159.8	116.7	135.2	153.8	111.6	129.3	147.1	106.2	123.1	140.0	100.1	116.0	132.0
		62	THC	141.0	141.0	164.8	135.7	135.7	157.1	129.3	129.3	153.1	123.2	123.2	145.7	116.3	116.3	137.5
			SHC	114.2	139.5	164.8	109.1	133.1	157.1	105.5	129.3	153.1	100.7	123.2	145.7	95.0	116.3	137.5
		67	THC	153.9	153.9	153.9	146.4	146.4	146.4	138.4	138.4	141.7	130.4	130.4	138.0	120.7	120.7	134.8
			SHC	91.6	119.2	146.8	88.9	116.6	144.2	86.2	113.9	141.7	83.0	110.5	138.0	79.8	107.3	134.8
		72	THC	170.3	170.3	170.3	162.2	162.2	162.2	153.3	153.3	153.3	144.3	144.3	144.3	134.5	134.5	134.5
			SHC	64.1	91.4	118.7	61.5	88.8	116.2	58.6	86.2	113.7	55.7	83.1	110.4	52.6	80.0	107.4
		76	THC	—	183.9	183.9	—	174.5	174.5	—	166.1	166.1	—	155.4	155.4	—	145.8	145.8
			SHC	—	69.0	95.3	—	66.4	93.0	—	63.8	90.6	—	60.7	87.6	—	57.9	84.8
6250 cfm	EA (wb)	58	THC	145.2	145.2	164.9	139.7	139.7	158.7	133.4	133.4	151.5	125.9	125.9	143.1	118.7	118.7	134.9
			SHC	125.4	145.2	164.9	120.6	139.7	158.7	115.2	133.4	151.5	108.8	125.9	143.1	102.6	118.7	134.9
		62	THC	145.2	145.2	171.6	139.8	139.8	165.2	133.7	133.7	157.9	126.6	126.6	149.6	119.5	119.5	141.2
			SHC	118.9	145.2	171.6	114.4	139.8	165.2	109.4	133.7	157.9	103.6	126.6	149.6	97.8	119.5	141.2
		67	THC	156.2	156.2	156.2	148.6	148.6	153.4	140.3	140.3	150.7	131.6	131.6	147.3	122.8	122.8	143.7
			SHC	96.0	126.0	156.0	93.3	123.3	153.4	90.5	120.6	150.7	87.4	117.4	147.3	84.2	114.0	143.7
		72	THC	172.5	172.5	172.5	164.3	164.3	164.3	155.3	155.3	155.3	146.1	146.1	146.1	136.0	136.0	136.0
			SHC	65.8	95.7	125.6	63.1	93.1	123.1	60.3	90.2	120.2	57.3	87.2	117.0	54.2	84.2	114.1
		76	THC	—	186.0	186.0	—	177.5	177.5	—	167.2	167.2	—	157.3	157.3	—	147.0	147.0
			SHC	—	71.0	100.2	—	68.5	97.7	—	65.4	94.7	—	62.6	92.2	—	59.6	89.2

LEGEND

db — dry bulb
EA — Entering Air (°F)
SHC — Sensible Heat Capacity (1000 Btuh) gross
THC — Total Capacity (1000 Btuh) gross
wb — wet bulb

Performance data (cont)

CAS153/FAS150 Stage 2 Combination Ratings — 60 Hz

CAS153/FAS150				AMBIENT TEMPERATURE (°F)														
				85			95			105			115			125		
				EA (db)			EA (db)			EA (db)			EA (db)			EA (db)		
				75	80	85	75	80	85	75	80	85	75	80	85	75	80	85
3150 cfm	EA (wb)	58	THC	107.3	107.3	120.2	103.2	103.2	115.8	98.5	98.5	111.6	93.7	93.7	106.2	88.3	88.3	100.1
			SHC	92.3	106.2	120.2	88.8	102.3	115.8	85.4	98.5	111.6	81.2	93.7	106.2	76.6	88.3	100.1
		62	THC	112.6	112.6	114.7	107.4	107.4	112.0	101.7	101.7	108.6	96.1	96.1	104.6	89.9	89.9	99.9
			SHC	83.4	99.0	114.7	80.8	96.4	112.0	77.7	93.1	108.6	74.5	89.5	104.6	70.7	85.3	99.9
		67	THC	124.5	124.5	124.5	118.7	118.7	118.7	112.6	112.6	112.6	105.8	105.8	105.8	98.4	98.4	98.4
			SHC	68.0	83.5	99.1	65.7	81.2	96.8	63.2	78.8	94.4	60.5	76.1	91.8	57.6	73.3	88.9
		72	THC	137.5	137.5	137.5	131.4	131.4	131.4	124.6	124.6	124.6	117.2	117.2	117.2	109.1	109.1	109.1
			SHC	52.7	67.7	82.6	50.4	65.5	80.6	47.8	63.1	78.4	45.1	60.5	75.9	42.2	57.7	73.2
		76	THC	—	148.8	148.8	—	142.2	142.2	—	135.0	135.0	—	126.9	126.9	—	118.2	118.2
			SHC	—	54.8	72.1	—	52.3	67.7	—	50.0	65.7	—	47.6	63.6	—	45.0	59.5
3750 cfm	EA (wb)	58	THC	113.7	113.7	128.8	109.4	109.4	123.9	104.7	104.7	118.5	99.4	99.4	112.5	93.5	93.5	105.9
			SHC	98.7	113.7	128.8	95.0	109.4	123.9	90.8	104.7	118.5	86.2	99.4	112.5	81.1	93.5	105.9
		62	THC	117.4	117.4	124.9	112.0	112.0	122.0	106.5	106.5	118.0	100.4	100.4	114.0	94.0	94.0	109.0
			SHC	89.6	107.2	124.9	87.0	104.5	122.0	83.7	100.9	118.0	80.3	97.1	114.0	76.6	92.8	109.0
		67	THC	128.7	128.7	128.7	122.6	122.6	122.6	116.1	116.1	116.1	108.9	108.9	108.9	101.2	101.2	101.2
			SHC	73.0	91.2	109.5	70.6	88.8	107.1	68.0	86.4	104.7	65.3	83.6	102.0	62.4	80.7	99.1
		72	THC	141.8	141.8	141.8	135.2	135.2	135.2	128.1	128.1	128.1	120.4	120.4	120.4	111.9	111.9	111.9
			SHC	54.6	72.5	90.3	52.3	70.2	88.2	49.7	67.8	85.9	47.0	65.1	83.3	44.0	62.2	80.5
		76	THC	—	153.3	153.3	—	146.2	146.2	—	138.4	138.4	—	130.1	130.1	—	121.0	121.0
			SHC	—	57.1	75.7	—	55.0	73.7	—	52.6	69.3	—	50.0	67.3	—	47.3	64.9
4400 cfm	EA (wb)	58	THC	119.8	119.8	135.6	115.1	115.1	130.3	110.0	110.0	124.5	104.3	104.3	118.1	98.1	98.1	111.0
			SHC	104.0	119.8	135.6	100.0	115.1	130.3	95.4	110.0	124.5	90.6	104.3	118.1	85.1	98.1	111.0
		62	THC	121.6	121.6	135.4	116.3	116.3	132.0	110.5	110.5	127.9	104.6	104.6	121.6	98.5	98.5	114.3
			SHC	96.0	115.7	135.4	93.1	112.6	132.0	89.9	108.9	127.9	85.5	103.5	121.6	80.3	97.3	114.3
		67	THC	132.0	132.0	132.0	125.7	125.7	125.7	118.8	118.8	118.8	111.5	111.5	112.4	103.3	103.3	109.1
			SHC	77.9	99.0	120.1	75.5	96.6	117.8	72.9	94.1	115.2	70.1	91.3	112.4	67.0	88.0	109.1
		72	THC	145.2	145.2	145.2	138.4	138.4	138.4	131.0	131.0	131.0	122.8	122.8	122.8	114.0	114.0	114.0
			SHC	56.5	77.3	98.1	54.1	74.9	95.8	51.5	72.5	93.4	48.7	69.7	90.7	45.8	66.8	87.8
		76	THC	—	156.7	156.7	—	149.3	149.3	—	141.2	141.2	—	132.6	132.6	—	123.3	123.3
			SHC	—	59.5	78.7	—	57.3	77.0	—	54.8	75.0	—	52.2	72.6	—	49.4	70.0
5000 cfm	EA (wb)	58	THC	124.4	124.4	140.8	119.5	119.5	135.2	114.1	114.1	129.1	108.0	108.0	122.3	101.5	101.5	114.9
			SHC	108.1	124.4	140.8	103.7	119.5	135.2	99.0	114.1	129.1	93.8	108.0	122.3	88.1	101.5	114.9
		62	THC	125.1	125.1	144.4	119.6	119.6	140.2	114.3	114.3	133.5	108.1	108.1	127.1	101.6	101.6	119.4
			SHC	101.7	123.1	144.4	98.4	119.3	140.2	93.8	113.6	133.5	89.2	108.1	127.1	83.8	101.6	119.4
		67	THC	134.4	134.4	134.4	127.9	127.9	127.9	120.7	120.7	124.3	113.3	113.3	121.3	105.0	105.0	116.5
			SHC	82.3	105.9	129.6	79.8	103.5	127.1	77.1	100.7	124.3	74.3	97.8	121.3	70.4	93.5	116.5
		72	THC	147.7	147.7	147.7	140.6	140.6	140.6	133.0	133.0	133.0	124.6	124.6	124.6	115.6	115.6	115.6
			SHC	58.0	81.4	104.8	55.6	79.0	102.5	53.0	76.5	100.0	50.2	73.7	97.3	47.2	70.8	94.3
		76	THC	—	159.1	159.1	—	151.5	151.5	—	143.2	143.2	—	134.4	134.4	—	124.9	124.9
			SHC	—	61.5	83.8	—	59.1	81.8	—	56.7	79.5	—	54.0	77.1	—	51.2	74.4
5650 cfm	EA (wb)	58	THC	128.6	128.6	145.4	123.4	123.4	139.6	117.7	117.7	133.2	111.5	111.5	126.1	104.6	104.6	118.3
			SHC	111.7	128.6	145.4	107.2	123.4	139.6	102.3	117.7	133.2	96.8	111.5	126.1	90.8	104.6	118.3
		62	THC	129.3	129.3	149.4	124.0	124.0	143.3	117.8	117.8	138.4	111.6	111.6	131.1	104.7	104.7	123.0
			SHC	105.4	127.4	149.4	101.0	122.1	143.3	97.2	117.8	138.4	92.0	111.6	131.1	86.3	104.7	123.0
		67	THC	136.4	136.4	139.2	129.8	129.8	136.5	122.5	122.5	133.2	114.7	114.7	129.3	106.9	106.9	123.6
			SHC	86.7	113.0	139.2	84.2	110.3	136.5	81.2	107.2	133.2	77.9	103.6	129.3	73.8	98.7	123.6
		72	THC	149.8	149.8	149.8	142.5	142.5	142.5	134.7	134.7	134.7	126.1	126.1	126.1	116.9	116.9	116.9
			SHC	59.5	85.6	111.7	57.1	83.2	109.4	54.5	80.7	106.9	51.7	77.9	104.1	48.7	74.9	101.1
		76	THC	—	161.2	161.2	—	153.4	153.4	—	145.0	145.0	—	136.0	136.0	—	126.2	126.2
			SHC	—	63.3	88.5	—	60.9	86.4	—	58.4	84.1	—	55.7	81.5	—	52.8	78.7

LEGEND

db — dry bulb
EA — Entering Air (°F)
SHC — Sensible Heat Capacity (1000 Btuh) gross
THC — Total Capacity (1000 Btuh) gross
wb — wet bulb

Performance data (cont)

CAS153/FAS150 Stage 1 Combination Ratings — 60 Hz

CAS153/FAS150				AMBIENT TEMPERATURE (°F)														
				85			95			105			115			125		
				EA (db)			EA (db)			EA (db)			EA (db)			EA (db)		
				75	80	85	75	80	85	75	80	85	75	80	85	75	80	85
3150 cfm	EA (wb)	58	THC	46.3	46.3	58.6	44.6	44.6	56.5	42.6	42.6	53.9	40.3	40.3	51.1	37.7	37.7	47.7
			SHC	34.0	46.3	58.6	32.8	44.6	56.5	31.3	42.6	53.9	29.6	40.3	51.1	27.6	37.7	47.7
		62	THC	47.8	47.8	59.3	45.6	45.6	58.2	43.0	43.0	56.9	40.5	40.5	54.9	38.0	38.0	50.5
			SHC	29.6	44.4	59.3	28.6	43.4	58.2	27.4	42.2	56.9	26.1	40.5	54.9	24.2	37.3	50.5
		67	THC	53.3	53.3	53.3	50.7	50.7	50.7	47.8	47.8	49.6	44.7	44.7	48.5	41.2	41.2	47.4
			SHC	22.0	36.8	51.7	21.0	35.8	50.6	19.9	34.8	49.6	18.7	33.6	48.5	17.5	32.4	47.4
		72	THC	59.2	59.2	59.2	56.4	56.4	56.4	53.3	53.3	53.3	49.8	49.8	49.8	46.1	46.1	46.1
			SHC	14.6	29.1	43.5	13.5	28.1	42.7	12.4	27.0	41.7	11.2	25.9	40.6	9.8	24.6	39.4
		76	THC	—	64.2	64.2	—	61.3	61.3	—	57.8	57.8	—	54.5	54.5	—	50.2	50.2
			SHC	—	22.5	39.9	—	21.7	34.2	—	20.5	33.5	—	19.6	33.5	—	18.4	32.7
3750 cfm	EA (wb)	58	THC	49.2	49.2	62.2	47.2	47.2	59.7	45.2	45.2	57.1	42.6	42.6	53.8	39.9	39.9	50.4
			SHC	36.3	49.2	62.2	34.8	47.2	59.7	33.2	45.2	57.1	31.3	42.6	53.8	29.3	39.9	50.4
		62	THC	49.7	49.7	65.6	48.0	48.0	62.5	45.2	45.2	61.1	42.7	42.7	57.8	40.1	40.1	54.2
			SHC	31.9	48.7	65.6	30.5	46.5	62.5	29.3	45.2	61.1	27.7	42.7	57.8	25.9	40.1	54.2
		67	THC	54.8	54.8	58.2	52.2	52.2	56.7	49.2	49.2	55.7	46.0	46.0	54.4	42.5	42.5	52.9
			SHC	23.1	40.7	58.2	22.0	39.4	56.7	21.0	38.3	55.7	19.8	37.1	54.4	18.5	35.7	52.9
		72	THC	60.7	60.7	60.7	57.9	57.9	57.9	54.5	54.5	54.5	51.0	51.0	51.0	47.2	47.2	47.2
			SHC	14.1	31.0	47.8	13.1	29.9	46.7	11.9	28.9	45.9	10.6	28.0	45.4	9.4	26.7	44.0
		76	THC	—	66.1	66.1	—	62.9	62.9	—	59.0	59.0	—	55.5	55.5	—	51.4	51.4
			SHC	—	23.6	39.1	—	22.7	38.7	—	21.5	37.8	—	20.5	37.2	—	19.2	36.2
4400 cfm	EA (wb)	58	THC	51.9	51.9	65.5	49.8	49.8	62.9	47.5	47.5	60.0	44.8	44.8	56.7	42.0	42.0	53.1
			SHC	38.3	51.9	65.5	36.8	49.8	62.9	35.0	47.5	60.0	33.0	44.8	56.7	30.9	42.0	53.1
		62	THC	51.9	51.9	70.0	49.8	49.8	67.2	47.7	47.7	64.4	44.9	44.9	60.6	41.8	41.8	56.5
			SHC	33.8	51.9	70.0	32.4	49.8	67.2	31.0	47.7	64.4	29.1	44.9	60.6	27.1	41.8	56.5
		67	THC	56.2	56.2	63.8	53.3	53.3	62.6	50.4	50.4	62.1	47.0	47.0	60.2	43.2	43.2	59.3
			SHC	24.1	43.9	63.8	23.0	42.8	62.6	22.1	42.1	62.1	20.8	40.5	60.2	19.6	39.5	59.3
		72	THC	62.0	62.0	62.0	59.0	59.0	59.0	55.7	55.7	55.7	52.1	52.1	52.1	48.1	48.1	48.5
			SHC	13.5	33.1	52.7	12.4	32.3	52.1	11.3	31.1	51.0	10.1	30.0	49.9	8.8	28.7	48.5
		76	THC	—	67.5	67.5	—	64.0	64.0	—	60.4	60.4	—	56.6	56.6	—	52.0	52.0
			SHC	—	24.4	43.0	—	23.4	42.5	—	22.4	41.6	—	21.3	40.8	—	20.0	39.7
5000 cfm	EA (wb)	58	THC	53.7	53.7	67.8	51.6	51.6	65.1	49.2	49.2	62.1	46.5	46.5	58.7	43.3	43.3	54.6
			SHC	39.7	53.7	67.8	38.1	51.6	65.1	36.3	49.2	62.1	34.3	46.5	58.7	31.9	43.3	54.6
		62	THC	53.9	53.9	72.6	51.6	51.6	69.6	49.0	49.0	66.1	46.5	46.5	62.7	43.3	43.3	58.4
			SHC	35.1	53.9	72.6	33.7	51.6	69.6	31.9	49.0	66.1	30.3	46.5	62.7	28.1	43.3	58.4
		67	THC	57.2	57.2	69.4	54.3	54.3	68.9	51.1	51.1	67.0	47.6	47.6	65.7	43.9	43.9	64.2
			SHC	25.0	47.2	69.4	24.1	46.5	68.9	22.9	45.0	67.0	21.8	43.8	65.7	20.6	42.4	64.2
		72	THC	63.1	63.1	63.1	60.0	60.0	60.0	56.6	56.6	56.6	52.8	52.8	53.9	48.7	48.7	52.6
			SHC	12.9	35.0	57.1	11.9	34.0	56.1	10.7	32.9	55.1	9.5	31.7	53.9	8.3	30.4	52.6
		76	THC	—	68.1	68.1	—	64.7	64.7	—	61.2	61.2	—	57.1	57.1	—	53.1	53.1
			SHC	—	25.0	46.3	—	24.0	45.8	—	22.9	44.6	—	21.8	43.7	—	20.6	42.6
5650 cfm	EA (wb)	58	THC	55.2	55.2	69.5	53.2	53.2	67.1	50.7	50.7	64.0	47.4	47.4	59.8	44.2	44.2	55.8
			SHC	40.8	55.2	69.5	39.4	53.2	67.1	37.5	50.7	64.0	35.0	47.4	59.8	32.7	44.2	55.8
		62	THC	55.7	55.7	75.0	53.3	53.3	71.8	50.5	50.5	68.0	47.8	47.8	64.5	44.5	44.5	60.0
			SHC	36.4	55.7	75.0	34.8	53.3	71.8	32.9	50.5	68.0	31.2	47.8	64.5	29.0	44.5	60.0
		67	THC	58.1	58.1	74.8	55.1	55.1	73.5	51.8	51.8	72.4	48.3	48.3	70.5	45.2	45.2	65.6
			SHC	26.0	50.4	74.8	25.0	49.2	73.5	23.9	48.2	72.4	22.7	46.6	70.5	21.1	43.3	65.6
		72	THC	64.0	64.0	64.0	60.8	60.8	60.8	57.2	57.2	59.2	53.4	53.4	58.0	49.2	49.2	56.6
			SHC	12.2	36.6	61.1	11.2	35.8	60.3	10.1	34.6	59.2	8.9	33.4	58.0	7.7	32.1	56.6
		76	THC	—	69.2	69.2	—	65.9	65.9	—	61.9	61.9	—	57.8	57.8	—	53.3	53.3
			SHC	—	25.4	49.4	—	24.5	48.5	—	23.4	47.7	—	22.2	46.6	—	20.9	45.4

LEGEND

db — dry bulb
EA — Entering Air (°F)
SHC — Sensible Heat Capacity (1000 Btuh) gross
THC — Total Capacity (1000 Btuh) gross
wb — wet bulb

Performance data (cont)

CAS181/FAS180 Stage 2 Combination Ratings — 60 Hz

CAS181/FAS180				AMBIENT TEMPERATURE (°F)														
				85			95			105			115			125		
				EA (db)			EA (db)			EA (db)			EA (db)			EA (db)		
				75	80	85	75	80	85	75	80	85	75	80	85	75	80	85
4500 cfm	EA (wb)	58	THC	155.2	155.2	168.9	146.6	146.6	169.0	140.8	140.8	162.3	134.7	134.7	155.2	128.1	128.1	147.6
			SHC	126.1	147.5	168.9	124.3	146.6	169.0	119.4	140.8	162.3	114.2	134.7	155.2	108.6	128.1	147.6
		62	THC	165.9	165.9	165.9	158.2	158.2	158.4	150.1	150.1	155.0	141.5	141.5	151.3	132.4	132.4	147.4
			SHC	113.6	137.7	161.7	110.4	134.4	158.4	107.0	131.0	155.0	103.4	127.3	151.3	99.6	123.5	147.4
		67	THC	187.3	187.3	187.3	178.9	178.9	178.9	170.0	170.0	170.0	160.4	160.4	160.4	150.2	150.2	150.2
			SHC	92.8	117.0	141.1	89.6	113.7	137.9	86.2	110.4	134.5	82.7	106.8	130.9	79.0	103.1	127.2
		72	THC	210.6	210.6	210.6	201.4	201.4	201.4	191.6	191.6	191.6	181.2	181.2	181.2	170.0	170.0	170.0
			SHC	71.6	95.9	120.3	68.4	92.8	117.1	65.1	89.4	113.7	61.6	85.9	110.1	57.9	82.2	106.4
		76	THC	—	230.5	230.5	—	220.6	220.6	—	210.0	210.0	—	198.8	198.8	—	186.6	186.6
			SHC	—	78.8	103.5	—	75.6	100.4	—	72.3	97.1	—	68.9	93.6	—	65.2	89.9
5250 cfm	EA (wb)	58	THC	164.0	164.0	188.4	158.0	158.0	181.5	151.6	151.6	174.2	144.8	144.8	166.4	137.4	137.4	157.9
			SHC	139.5	164.0	188.4	134.4	158.0	181.5	129.0	151.6	174.2	123.2	144.8	166.4	117.0	137.4	157.9
		62	THC	173.0	173.0	181.0	164.9	164.9	177.5	156.4	156.4	173.7	147.4	147.4	169.5	138.1	138.1	164.3
			SHC	125.5	153.2	181.0	122.1	149.8	177.5	118.5	146.1	173.7	114.6	142.0	169.5	110.2	137.3	164.3
		67	THC	194.7	194.7	194.7	185.7	185.7	185.7	176.1	176.1	176.1	166.0	166.0	166.0	155.1	155.1	155.1
			SHC	100.7	128.7	156.6	97.4	125.3	153.3	93.9	121.8	149.8	90.2	118.1	146.1	86.4	114.3	142.2
		72	THC	218.2	218.2	218.2	208.5	208.5	208.5	198.1	198.1	198.1	186.9	186.9	186.9	175.1	175.1	175.1
			SHC	75.4	103.6	131.8	72.2	100.3	128.4	68.7	96.8	124.9	65.0	93.1	121.2	61.2	89.3	117.4
		76	THC	—	238.3	238.3	—	227.8	227.8	—	216.6	216.6	—	204.7	204.7	—	191.8	191.8
			SHC	—	83.3	112.2	—	80.0	108.7	—	76.5	105.1	—	72.9	101.4	—	69.0	97.5
6000 cfm	EA (wb)	58	THC	174.0	174.0	199.5	167.5	167.5	192.0	160.6	160.6	184.1	153.2	153.2	175.6	145.3	145.3	166.5
			SHC	148.5	174.0	199.5	143.0	167.5	192.0	137.1	160.6	184.1	130.8	153.2	175.6	124.0	145.3	166.5
		62	THC	179.1	179.1	199.2	170.6	170.6	195.1	162.4	162.4	189.1	153.4	153.4	183.3	145.5	145.5	173.8
			SHC	136.7	168.0	199.2	132.9	164.0	195.1	128.2	158.7	189.1	123.6	153.4	183.3	117.2	145.5	173.8
		67	THC	200.3	200.3	200.3	190.9	190.9	190.9	180.8	180.8	180.8	170.2	170.2	170.2	158.9	158.9	158.9
			SHC	108.1	139.8	171.5	104.6	136.3	168.0	101.0	132.7	164.4	97.3	129.0	160.6	93.4	125.0	156.6
		72	THC	224.1	224.1	224.1	213.9	213.9	213.9	203.0	203.0	203.0	191.4	191.4	191.4	178.9	178.9	178.9
			SHC	78.7	110.6	142.5	75.3	107.2	139.1	71.7	103.6	135.5	68.0	99.9	131.7	64.1	95.9	127.8
		76	THC	—	244.3	244.3	—	233.3	233.3	—	221.7	221.7	—	209.2	209.2	—	195.8	195.8
			SHC	—	87.0	119.5	—	83.6	116.1	—	80.1	112.5	—	76.3	108.6	—	72.4	104.6
6750 cfm	EA (wb)	58	THC	182.6	182.6	209.0	175.7	175.7	201.1	168.3	168.3	192.6	160.3	160.3	183.5	151.8	151.8	173.8
			SHC	156.2	182.6	209.0	150.3	175.7	201.1	143.9	168.3	192.6	137.2	160.3	183.5	129.9	151.8	173.8
		62	THC	184.3	184.3	215.4	176.0	176.0	209.8	168.5	168.5	200.9	160.6	160.6	191.4	152.1	152.1	181.3
			SHC	146.7	181.0	215.4	142.2	176.0	209.8	136.1	168.5	200.9	129.7	160.6	191.4	122.9	152.1	181.3
		67	THC	204.8	204.8	204.8	195.0	195.0	195.0	184.6	184.6	184.6	173.6	173.6	174.6	162.0	162.0	170.4
			SHC	115.0	150.4	185.8	111.5	146.9	182.3	107.9	143.2	178.6	104.0	139.3	174.6	100.0	135.2	170.4
		72	THC	228.8	228.8	228.8	218.2	218.2	218.2	206.8	206.8	206.8	194.8	194.8	194.8	182.0	182.0	182.0
			SHC	81.5	117.2	152.8	78.1	113.7	149.3	74.5	110.1	145.7	70.7	106.3	141.8	66.7	102.2	137.8
		76	THC	—	249.1	249.1	—	237.7	237.7	—	225.6	225.6	—	212.8	212.8	—	199.0	199.0
			SHC	—	90.3	126.5	—	86.9	123.0	—	83.2	119.3	—	79.4	115.4	—	75.4	111.3
7500 cfm	EA (wb)	58	THC	190.0	190.0	217.1	182.7	182.7	208.8	174.8	174.8	199.8	166.4	166.4	190.2	157.5	157.5	180.0
			SHC	162.8	190.0	217.1	156.6	182.7	208.8	149.8	174.8	199.8	142.7	166.4	190.2	135.0	157.5	180.0
		62	THC	192.7	192.7	218.5	182.9	182.9	217.7	175.0	175.0	208.3	166.7	166.7	198.3	157.6	157.6	187.6
			SHC	150.4	184.5	218.5	148.1	182.9	217.7	141.8	175.0	208.3	135.0	166.7	198.3	127.7	157.6	187.6
		67	THC	208.5	208.5	208.5	198.4	198.4	198.4	187.7	187.7	192.2	176.5	176.5	188.1	164.6	164.6	183.6
			SHC	121.6	160.6	199.7	118.1	157.1	196.0	114.4	153.3	192.2	110.5	149.3	188.1	106.4	145.0	183.6
		72	THC	232.6	232.6	232.6	221.6	221.6	221.6	210.0	210.0	210.0	197.7	197.7	197.7	184.5	184.5	184.5
			SHC	84.1	123.4	162.7	80.6	119.9	159.1	76.9	116.2	155.4	73.1	112.3	151.6	69.1	108.3	147.5
		76	THC	—	253.0	253.0	—	241.3	241.3	—	228.9	228.9	—	215.7	215.7	—	201.6	201.6
			SHC	—	93.3	133.1	—	89.7	129.5	—	86.1	125.8	—	82.2	121.8	—	78.1	117.7

LEGEND

db — dry bulb
EA — Entering Air (°F)
SHC — Sensible Heat Capacity (1000 Btuh) gross
THC — Total Capacity (1000 Btuh) gross
wb — wet bulb

Performance data (cont)

CAS181/FAS180 Stage 1 Combination Ratings — 60 Hz

CAS181/FAS180				AMBIENT TEMPERATURE (°F)														
				85			95			105			115			125		
				EA (db)			EA (db)			EA (db)			EA (db)			EA (db)		
				75	80	85	75	80	85	75	80	85	75	80	85	75	80	85
3750 cfm	EA (wb)	58	THC	102.6	102.6	117.0	95.7	95.7	109.6	88.6	88.6	101.9	81.1	81.1	93.8	73.2	73.2	85.2
			SHC	88.1	102.6	117.0	81.8	95.7	109.6	75.3	88.6	101.9	68.4	81.1	93.8	61.2	73.2	85.2
		62	THC	102.7	102.7	121.9	95.9	95.9	114.4	88.8	88.8	106.5	81.2	81.2	98.1	73.3	73.3	89.2
			SHC	83.5	102.7	121.9	77.4	95.9	114.4	71.0	88.8	106.5	64.4	81.2	98.1	57.4	73.3	89.2
		67	THC	112.4	112.4	112.4	104.1	104.1	104.1	95.4	95.4	97.0	86.4	86.4	92.0	76.8	76.8	86.8
			SHC	65.6	86.2	106.8	60.8	81.4	102.0	55.9	76.4	97.0	50.9	71.4	92.0	45.7	66.3	86.8
		72	THC	125.2	125.2	125.2	116.5	116.5	116.5	107.3	107.3	107.3	97.6	97.6	97.6	87.4	87.4	87.4
			SHC	45.3	66.0	86.6	40.5	61.1	81.7	35.5	56.0	76.6	30.4	51.0	71.6	25.1	45.7	66.3
		76	THC	—	136.2	136.2	—	127.2	127.2	—	117.6	117.6	—	107.5	107.5	—	96.9	96.9
			SHC	—	49.7	70.3	—	44.8	65.4	—	39.8	60.4	—	34.6	55.3	—	29.3	50.0
4500 cfm	EA (wb)	58	THC	109.4	109.4	124.6	102.3	102.3	116.9	94.7	94.7	108.6	86.7	86.7	100.0	78.3	78.3	90.8
			SHC	94.2	109.4	124.6	87.7	102.3	116.9	80.7	94.7	108.6	73.4	86.7	100.0	65.7	78.3	90.8
		62	THC	109.6	109.6	129.8	102.5	102.5	121.9	94.8	94.8	113.4	86.8	86.8	104.5	78.4	78.4	95.0
			SHC	89.3	109.6	129.8	83.0	102.5	121.9	76.2	94.8	113.4	69.1	86.8	104.5	61.7	78.4	95.0
		67	THC	115.5	115.5	122.1	107.0	107.0	117.3	98.1	98.1	112.4	88.7	88.7	107.3	78.9	78.9	102.0
			SHC	72.9	97.5	122.1	68.1	92.7	117.3	63.2	87.8	112.4	58.2	82.7	107.3	53.0	77.5	102.0
		72	THC	128.4	128.4	128.4	119.4	119.4	119.4	110.0	110.0	110.0	100.0	100.0	100.0	89.4	89.4	89.4
			SHC	47.8	72.5	97.3	42.9	67.6	92.3	37.9	62.6	87.3	32.7	57.4	82.2	27.4	52.1	76.9
		76	THC	—	139.7	139.7	—	130.3	130.3	—	120.4	120.4	—	110.0	110.0	—	99.1	99.1
			SHC	—	52.4	77.2	—	47.5	72.2	—	42.4	67.2	—	37.2	61.9	—	31.8	56.5
5250 cfm	EA (wb)	58	THC	115.1	115.1	130.9	107.5	107.5	122.7	99.6	99.6	114.1	91.1	91.1	104.9	82.2	82.2	95.2
			SHC	99.2	115.1	130.9	92.3	107.5	122.7	85.0	99.6	114.1	77.4	91.1	104.9	69.3	82.2	95.2
		62	THC	115.1	115.1	136.1	107.6	107.6	127.8	99.7	99.7	119.0	91.2	91.2	109.5	82.3	82.3	99.6
			SHC	94.0	115.1	136.1	87.3	107.6	127.8	80.4	99.7	119.0	72.9	91.2	109.5	65.1	82.3	99.6
		67	THC	117.8	117.8	137.3	109.2	109.2	132.5	100.1	100.1	127.2	91.4	91.4	118.8	82.5	82.5	108.2
			SHC	80.1	108.7	137.3	75.3	103.9	132.5	70.4	98.8	127.2	64.0	91.4	118.8	56.7	82.5	108.2
		72	THC	130.7	130.7	130.7	121.5	121.5	121.5	111.8	111.8	111.8	101.6	101.6	101.6	90.8	90.8	90.8
			SHC	49.9	78.8	107.6	45.0	73.8	102.7	40.0	68.8	97.6	34.9	63.6	92.4	29.6	58.4	87.1
		76	THC	—	142.2	142.2	—	132.6	132.6	—	122.5	122.5	—	111.9	111.9	—	100.7	100.7
			SHC	—	54.7	83.6	—	49.7	78.6	—	44.5	73.4	—	39.3	68.2	—	33.8	62.6
6000 cfm	EA (wb)	58	THC	119.6	119.6	135.9	111.7	111.7	127.4	103.4	103.4	118.3	94.6	94.6	108.8	85.5	85.5	98.8
			SHC	103.3	119.6	135.9	96.1	111.7	127.4	88.4	103.4	118.3	80.5	94.6	108.8	72.1	85.5	98.8
		62	THC	119.6	119.6	141.3	111.7	111.7	132.5	103.6	103.6	123.4	94.8	94.8	113.6	85.5	85.5	103.3
			SHC	97.9	119.6	141.3	90.9	111.7	132.5	83.7	103.6	123.4	76.0	94.8	113.6	67.8	85.5	103.3
		67	THC	119.9	119.9	151.6	111.9	111.9	143.0	103.7	103.7	133.4	94.9	94.9	123.0	85.7	85.7	112.1
			SHC	87.1	119.4	151.6	80.8	111.9	143.0	74.0	103.7	133.4	66.8	94.9	123.0	59.2	85.7	112.1
		72	THC	132.4	132.4	132.4	123.1	123.1	123.1	113.2	113.2	113.2	102.8	102.8	102.8	91.9	91.9	97.3
			SHC	52.0	84.8	117.7	47.1	79.9	112.7	42.1	74.9	107.7	37.1	69.8	102.6	32.0	64.6	97.3
		76	THC	—	144.0	144.0	—	134.3	134.3	—	124.0	124.0	—	113.2	113.2	—	101.9	101.9
			SHC	—	56.6	89.6	—	51.5	84.4	—	46.3	79.2	—	40.9	73.7	—	35.3	67.8
6750 cfm	EA (wb)	58	THC	123.1	123.1	139.9	115.1	115.1	131.1	106.6	106.6	121.9	97.6	97.6	112.1	88.1	88.1	101.7
			SHC	106.4	123.1	139.9	99.0	115.1	131.1	91.3	106.6	121.9	83.1	97.6	112.1	74.5	88.1	101.7
		62	THC	123.3	123.3	145.5	115.4	115.4	136.7	106.8	106.8	127.2	97.7	97.7	116.9	88.2	88.2	106.3
			SHC	101.0	123.3	145.5	94.0	115.4	136.7	86.5	106.8	127.2	78.4	97.7	116.9	70.1	88.2	106.3
		67	THC	123.4	123.4	156.7	115.3	115.3	147.2	106.8	106.8	137.2	97.8	97.8	126.6	88.3	88.3	115.3
			SHC	90.2	123.4	156.7	83.5	115.3	147.2	76.5	106.8	137.2	69.1	97.8	126.6	61.3	88.3	115.3
		72	THC	133.7	133.7	133.7	124.3	124.3	124.3	114.2	114.2	117.8	103.7	103.7	112.9	92.7	92.7	108.1
			SHC	54.1	90.9	127.7	49.2	86.0	122.8	44.4	81.1	117.8	39.5	76.2	112.9	34.7	71.4	108.1
		76	THC	—	145.5	145.5	—	135.6	135.6	—	125.2	125.2	—	114.3	114.3	—	102.9	102.9
			SHC	—	58.0	94.9	—	52.8	89.6	—	47.5	84.2	—	41.9	78.4	—	36.1	72.3

LEGEND

db — dry bulb
EA — Entering Air (°F)
SHC — Sensible Heat Capacity (1000 Btuh) gross
THC — Total Capacity (1000 Btuh) gross
wb — wet bulb

Performance data (cont)

CAS183/FAS180 Stage 3 Combination Ratings — 60 Hz

CAS183/FAS180				AMBIENT TEMPERATURE (°F)														
				85			95			105			115			125		
				EA (db)			EA (db)			EA (db)			EA (db)			EA (db)		
				75	80	85	75	80	85	75	80	85	75	80	85	75	80	85
4500 cfm	EA (wb)	58	THC	167.6	167.6	185.4	161.3	161.3	180.5	154.6	154.6	174.8	147.9	147.9	167.2	140.7	140.7	159.1
			SHC	143.3	164.4	185.4	139.1	159.8	180.5	134.4	154.6	174.8	128.6	147.9	167.2	122.3	140.7	159.1
		62	THC	177.9	177.9	177.9	170.1	170.1	170.4	166.5	166.5	166.5	153.3	153.3	162.7	144.1	144.1	158.2
			SHC	128.6	151.2	173.9	125.1	147.8	170.4	118.5	139.9	161.3	117.4	140.0	162.7	113.2	135.7	158.2
		67	THC	195.6	195.6	195.6	187.3	187.3	187.3	178.3	178.3	178.3	168.8	168.8	168.8	158.7	158.7	158.7
			SHC	105.8	128.2	150.7	102.4	124.9	147.5	98.7	121.4	144.0	94.9	117.7	140.4	91.0	113.8	136.6
		72	THC	215.9	215.9	215.9	206.7	206.7	206.7	196.9	196.9	196.9	186.4	186.4	186.4	175.3	175.3	175.3
			SHC	83.4	105.1	126.7	79.8	101.8	123.7	76.1	98.2	120.4	72.2	94.5	116.9	68.1	90.6	113.2
		76	THC	—	233.6	233.6	—	223.7	223.7	—	212.9	212.9	—	201.6	201.6	—	189.4	189.4
			SHC	—	85.1	109.9	—	81.9	106.6	—	78.9	103.7	—	75.5	95.0	—	71.7	92.8
5350 cfm	EA (wb)	58	THC	176.0	176.0	198.9	169.7	169.7	191.8	163.0	163.0	184.2	155.8	155.8	176.1	148.0	148.0	167.3
			SHC	153.1	176.0	198.9	147.6	169.7	191.8	141.8	163.0	184.2	135.5	155.8	176.1	128.7	148.0	167.3
		62	THC	183.7	183.7	190.5	175.6	175.6	186.8	166.9	166.9	182.7	158.1	158.1	177.9	148.9	148.9	171.5
			SHC	138.5	164.5	190.5	134.9	160.8	186.8	130.9	156.8	182.7	126.6	152.3	177.9	121.3	146.4	171.5
		67	THC	201.7	201.7	201.7	192.9	192.9	192.9	183.4	183.4	183.4	173.4	173.4	173.4	162.9	162.9	162.9
			SHC	112.3	138.3	164.3	108.8	134.9	161.0	105.1	131.2	157.4	101.2	127.5	153.7	97.2	123.5	149.8
		72	THC	222.2	222.2	222.2	212.5	212.5	212.5	202.1	202.1	202.1	191.1	191.1	191.1	179.4	179.4	179.4
			SHC	85.8	111.3	136.8	82.2	107.9	133.6	78.4	104.3	130.1	74.5	100.5	126.5	70.4	96.5	122.6
		76	THC	—	240.0	240.0	—	229.4	229.4	—	218.3	218.3	—	206.4	206.4	—	193.5	193.5
			SHC	—	88.8	117.7	—	85.7	107.4	—	82.2	105.9	—	78.5	103.0	—	74.5	99.7
6000 cfm	EA (wb)	58	THC	183.9	183.9	207.9	177.3	177.3	200.4	170.0	170.0	192.2	162.4	162.4	183.5	154.2	154.2	174.3
			SHC	160.0	183.9	207.9	154.2	177.3	200.4	147.9	170.0	192.2	141.3	162.4	183.5	134.2	154.2	174.3
		62	THC	188.4	188.4	206.1	180.1	180.1	201.6	171.5	171.5	196.0	163.6	163.6	187.6	156.3	156.3	173.7
			SHC	147.8	176.9	206.1	143.7	172.7	201.6	139.0	167.5	196.0	132.9	160.3	187.6	124.0	148.9	173.7
		67	THC	206.5	206.5	206.5	197.3	197.3	197.3	187.4	187.4	187.4	177.0	177.0	177.0	166.0	166.0	166.0
			SHC	118.3	147.8	177.3	114.8	144.4	173.9	111.1	140.7	170.4	107.2	136.8	166.5	103.1	132.7	162.4
		72	THC	227.1	227.1	227.1	217.0	217.0	217.0	206.2	206.2	206.2	194.7	194.7	194.7	182.5	182.5	182.5
			SHC	88.0	117.1	146.2	84.4	113.7	142.9	80.6	110.0	139.4	76.6	106.1	135.6	72.4	102.0	131.6
		76	THC	—	244.9	244.9	—	234.0	234.0	—	222.3	222.3	—	210.0	210.0	—	197.0	197.0
			SHC	—	91.9	118.1	—	88.5	115.7	—	84.9	112.8	—	81.1	109.6	—	77.1	106.0
6750 cfm	EA (wb)	58	THC	190.8	190.8	215.5	183.8	183.8	207.6	176.2	176.2	199.1	168.1	168.1	189.9	159.4	159.4	180.1
			SHC	166.0	190.8	215.5	159.9	183.8	207.6	153.3	176.2	199.1	146.2	168.1	189.9	138.7	159.4	180.1
		62	THC	192.8	192.8	218.6	184.7	184.7	213.0	178.8	178.8	196.7	168.7	168.7	195.3	159.6	159.6	187.1
			SHC	155.4	187.0	218.6	150.8	181.9	213.0	140.9	168.8	196.7	138.1	166.7	195.3	132.0	159.6	187.1
		67	THC	210.4	210.4	210.4	200.8	200.8	200.8	190.7	190.7	190.7	183.1	183.1	183.1	168.5	168.5	174.5
			SHC	124.2	157.0	189.9	120.6	153.5	186.5	116.8	149.8	182.8	111.4	142.1	172.8	108.6	141.6	174.5
		72	THC	231.1	231.1	231.1	220.6	220.6	220.6	209.4	209.4	209.4	197.5	197.5	197.5	185.0	185.0	185.0
			SHC	90.0	122.6	155.2	86.4	119.1	151.8	82.5	115.3	148.1	78.5	111.4	144.3	74.3	107.2	140.2
		76	THC	—	249.0	249.0	—	237.6	237.6	—	225.6	225.6	—	213.0	213.0	—	199.2	199.2
			SHC	—	94.4	125.1	—	90.9	122.2	—	87.3	119.0	—	83.5	115.6	—	79.3	111.7
7500 cfm	EA (wb)	58	THC	196.7	196.7	222.2	189.3	189.3	213.8	181.4	181.4	204.9	172.9	172.9	195.3	163.8	163.8	185.1
			SHC	171.2	196.7	222.2	164.7	189.3	213.8	157.9	181.4	204.9	150.5	172.9	195.3	142.6	163.8	185.1
		62	THC	197.9	197.9	226.5	191.3	191.3	214.8	181.6	181.6	212.9	173.1	173.1	202.9	164.0	164.0	192.3
			SHC	160.7	193.6	226.5	153.1	183.9	214.8	150.2	181.6	212.9	143.2	173.1	202.9	135.7	164.0	192.3
		67	THC	213.5	213.5	213.5	203.7	203.7	203.7	193.2	193.2	194.7	182.3	182.3	190.5	171.1	171.1	186.1
			SHC	129.8	166.0	202.1	126.1	162.3	198.5	122.3	158.5	194.7	118.3	154.4	190.5	114.2	150.1	186.1
		72	THC	234.3	234.3	234.3	223.5	223.5	223.5	211.9	211.9	211.9	199.8	199.8	199.8	187.0	187.0	187.0
			SHC	91.8	127.8	163.7	88.2	124.2	160.3	84.3	120.4	156.6	80.3	116.4	152.6	76.1	112.3	148.5
		76	THC	—	252.2	252.2	—	240.6	240.6	—	228.4	228.4	—	215.3	215.3	—	201.4	201.4
			SHC	—	96.7	131.2	—	93.1	128.0	—	89.5	124.8	—	85.5	121.2	—	81.4	117.2

LEGEND

db — dry bulb
EA — Entering Air (°F)
SHC — Sensible Heat Capacity (1000 Btuh) gross
THC — Total Capacity (1000 Btuh) gross
wb — wet bulb

Performance data (cont)

CAS183/FAS180 Stage 2 Combination Ratings — 60 Hz

CAS183/FAS180				AMBIENT TEMPERATURE (°F)														
				85			95			105			115			125		
				EA (db)			EA (db)			EA (db)			EA (db)			EA (db)		
				75	80	85	75	80	85	75	80	85	75	80	85	75	80	85
3750 cfm	EA (wb)	58	THC	137.5	137.5	150.1	131.2	131.2	145.3	124.6	124.6	139.8	118.3	118.3	132.3	110.9	110.9	125.5
			SHC	116.0	133.0	150.1	111.9	128.6	145.3	107.3	123.5	139.8	101.7	117.0	132.3	96.3	110.9	125.5
		62	THC	145.4	145.4	145.4	137.9	137.9	139.5	130.4	130.4	133.1	122.5	122.5	128.1	114.6	114.6	121.7
			SHC	105.6	124.5	143.3	101.9	120.7	139.5	96.9	115.0	133.1	92.5	110.3	128.1	87.4	104.6	121.7
		67	THC	161.3	161.3	161.3	153.1	153.1	153.1	144.3	144.3	144.3	135.0	135.0	135.0	125.1	125.1	125.1
			SHC	87.4	106.2	124.9	84.1	102.9	121.8	80.5	99.5	118.4	76.9	95.9	114.9	73.1	92.1	111.1
		72	THC	178.7	178.7	178.7	170.0	170.0	170.0	160.5	160.5	160.5	150.4	150.4	150.4	139.7	139.7	139.7
			SHC	69.5	87.3	105.2	66.0	84.2	102.4	62.4	80.8	99.3	58.6	77.3	95.9	54.8	73.5	92.3
		76	THC	—	193.5	193.5	—	184.5	184.5	—	174.4	174.4	—	163.8	163.8	—	152.3	152.3
			SHC	—	72.3	90.0	—	68.9	87.6	—	65.5	84.6	—	61.8	81.1	—	58.3	77.7
4500 cfm	EA (wb)	58	THC	146.7	146.7	163.1	139.7	139.7	158.1	133.1	133.1	150.5	125.9	125.9	142.4	118.3	118.3	133.8
			SHC	125.7	144.4	163.1	121.4	139.7	158.1	115.6	133.1	150.5	109.3	125.9	142.4	102.8	118.3	133.8
		62	THC	152.1	152.1	156.8	149.3	149.3	149.3	136.9	136.9	146.5	132.8	132.8	136.2	120.2	120.2	133.3
			SHC	113.9	135.4	156.8	107.4	127.9	148.3	105.1	125.8	146.5	97.2	116.7	136.2	94.6	114.0	133.3
		67	THC	167.6	167.6	167.6	159.0	159.0	159.0	149.6	149.6	149.6	139.6	139.6	139.6	129.2	129.2	129.2
			SHC	94.1	116.5	138.9	90.8	113.2	135.6	87.1	109.6	132.1	83.3	105.8	128.3	79.3	101.8	124.3
		72	THC	185.4	185.4	185.4	176.1	176.1	176.1	166.0	166.0	166.0	155.3	155.3	155.3	144.1	144.1	144.1
			SHC	72.2	94.0	115.8	68.7	90.8	112.8	65.1	87.2	109.4	61.3	83.6	105.9	57.4	79.8	102.1
		76	THC	—	200.8	200.8	—	191.0	191.0	—	180.2	180.2	—	168.8	168.8	—	156.6	156.6
			SHC	—	75.1	97.7	—	72.0	94.9	—	68.9	91.9	—	65.4	86.0	—	61.7	83.2
5250 cfm	EA (wb)	58	THC	154.0	154.0	174.1	147.3	147.3	166.6	140.1	140.1	158.5	132.4	132.4	149.8	124.3	124.3	140.6
			SHC	133.8	154.0	174.1	128.0	147.3	166.6	121.8	140.1	158.5	115.1	132.4	149.8	108.0	124.3	140.6
		62	THC	157.9	157.9	170.3	150.4	150.4	164.5	142.3	142.3	157.8	133.6	133.6	151.5	124.8	124.8	144.5
			SHC	122.1	146.2	170.3	117.4	140.9	164.5	112.1	134.9	157.8	107.1	129.3	151.5	101.8	123.2	144.5
		67	THC	174.1	174.1	174.1	163.3	163.3	163.3	153.5	153.5	153.5	143.0	143.0	143.0	132.4	132.4	135.0
			SHC	101.6	126.3	151.1	97.0	122.9	148.8	93.2	119.1	145.0	89.1	114.8	140.6	84.4	109.7	135.0
		72	THC	190.2	190.2	190.2	180.6	180.6	180.6	170.1	170.1	170.1	158.9	158.9	158.9	147.2	147.2	147.2
			SHC	74.6	100.0	125.5	71.2	96.7	122.3	67.5	93.2	118.9	63.7	89.5	115.2	59.7	85.5	111.3
		76	THC	—	205.8	205.8	—	195.5	195.5	—	184.3	184.3	—	172.4	172.4	—	159.8	159.8
			SHC	—	78.6	105.1	—	75.5	98.9	—	72.0	96.4	—	68.4	93.3	—	64.5	89.8
6000 cfm	EA (wb)	58	THC	160.7	160.7	181.7	153.7	153.7	173.8	146.1	146.1	165.2	137.9	137.9	156.0	129.3	129.3	146.2
			SHC	139.7	160.7	181.7	133.6	153.7	173.8	127.0	146.1	165.2	119.9	137.9	156.0	112.4	129.3	146.2
		62	THC	163.1	163.1	181.3	155.2	155.2	175.9	146.8	146.8	168.6	138.2	138.2	161.6	130.1	130.1	149.5
			SHC	128.9	155.1	181.3	124.5	150.2	175.9	119.0	143.8	168.6	113.8	137.7	161.6	105.8	127.7	149.5
		67	THC	176.0	176.0	176.0	166.6	166.6	166.6	156.4	156.4	156.7	145.9	145.9	151.1	136.0	136.0	142.7
			SHC	106.3	135.5	164.7	102.7	131.9	161.1	98.6	127.6	156.7	94.0	122.5	151.1	88.1	115.4	142.7
		72	THC	194.0	194.0	194.0	184.1	184.1	184.1	173.2	173.2	173.2	161.7	161.7	161.7	149.6	149.6	149.6
			SHC	76.8	105.7	134.6	73.4	102.4	131.4	69.7	98.8	127.9	65.9	95.0	124.1	61.8	91.0	120.1
		76	THC	—	209.6	209.6	—	198.9	198.9	—	187.4	187.4	—	175.2	175.2	—	162.2	162.2
			SHC	—	81.5	108.7	—	78.3	106.0	—	74.8	103.0	—	71.1	99.6	—	67.1	95.8
6750 cfm	EA (wb)	58	THC	166.4	166.4	188.1	159.1	159.1	179.8	151.1	151.1	170.8	142.5	142.5	161.1	133.6	133.6	151.0
			SHC	144.7	166.4	188.1	138.3	159.1	179.8	131.4	151.1	170.8	124.0	142.5	161.1	116.1	133.6	151.0
		62	THC	167.4	167.4	191.8	159.6	159.6	184.9	152.2	152.2	174.4	143.0	143.0	165.9	133.7	133.7	156.9
			SHC	135.5	163.6	191.8	130.5	157.7	184.9	123.5	149.0	174.4	117.2	141.5	165.9	110.5	133.7	156.9
		67	THC	179.0	179.0	179.0	169.3	169.3	172.4	159.1	159.1	166.8	149.4	149.4	157.7	138.5	138.5	151.6
			SHC	111.8	144.2	176.6	108.0	140.2	172.4	103.4	135.1	166.8	97.2	127.5	157.7	92.3	121.9	151.6
		72	THC	197.0	197.0	197.0	186.8	186.8	186.8	175.7	175.7	175.7	163.9	163.9	163.9	151.5	151.5	151.5
			SHC	78.9	111.2	143.4	75.5	107.8	140.1	71.8	104.1	136.5	67.9	100.2	132.6	63.8	96.2	128.5
		76	THC	—	212.7	212.7	—	201.8	201.8	—	190.0	190.0	—	177.5	177.5	—	164.1	164.1
			SHC	—	84.1	115.2	—	80.9	112.3	—	77.3	109.0	—	73.5	105.4	—	69.5	101.5

LEGEND

db — dry bulb
EA — Entering Air (°F)
SHC — Sensible Heat Capacity (1000 Btuh) gross
THC — Total Capacity (1000 Btuh) gross
wb — wet bulb

Performance data (cont)

CAS183/FAS180 Stage 1 Combination Ratings — 60 Hz

CAS183/FAS180				AMBIENT TEMPERATURE (°F)														
				85			95			105			115			125		
				EA (db)			EA (db)			EA (db)			EA (db)			EA (db)		
				75	80	85	75	80	85	75	80	85	75	80	85	75	80	85
3750 cfm	EA (wb)	58	THC	51.8	51.8	64.3	49.3	49.3	59.3	45.9	45.9	57.6	42.7	42.7	53.6	39.4	39.4	49.4
			SHC	38.4	51.3	64.3	36.0	47.6	59.3	34.2	45.9	57.6	31.8	42.7	53.6	29.3	39.4	49.4
		62	THC	54.9	54.9	61.8	51.4	51.4	60.7	47.3	47.3	58.0	43.2	43.2	55.2	40.0	40.0	50.2
			SHC	33.5	47.6	61.8	32.0	46.3	60.7	29.9	43.9	58.0	27.9	41.5	55.2	25.6	37.9	50.2
		67	THC	60.8	60.8	60.8	56.9	56.9	56.9	52.5	52.5	52.5	48.0	48.0	49.9	43.2	43.2	48.0
			SHC	26.6	40.5	54.4	24.9	39.1	53.2	23.1	37.4	51.7	21.3	35.6	49.9	19.4	33.7	48.0
		72	THC	67.6	67.6	67.6	63.3	63.3	63.3	58.6	58.6	58.6	53.6	53.6	53.6	48.4	48.4	48.4
			SHC	20.3	33.2	46.1	18.3	31.8	45.2	16.3	30.2	44.1	14.4	28.5	42.7	12.4	26.8	41.2
		76	THC	—	73.3	73.3	—	68.8	68.8	—	63.8	63.8	—	58.6	58.6	—	53.1	53.1
			SHC	—	26.6	47.2	—	25.3	45.9	—	24.1	44.7	—	22.6	35.0	—	21.0	34.6
4500 cfm	EA (wb)	58	THC	54.9	54.9	68.9	51.9	51.9	65.2	48.6	48.6	61.0	45.2	45.2	56.7	41.5	41.5	52.1
			SHC	40.9	54.9	68.9	38.7	51.9	65.2	36.2	48.6	61.0	33.6	45.2	56.7	30.9	41.5	52.1
		62	THC	56.9	56.9	67.7	53.1	53.1	66.1	49.1	49.1	63.1	45.3	45.3	59.6	41.5	41.5	55.6
			SHC	35.5	51.6	67.7	33.8	50.0	66.1	31.8	47.4	63.1	29.7	44.6	59.6	27.5	41.5	55.6
		67	THC	62.9	62.9	62.9	58.7	58.7	58.9	54.2	54.2	57.2	49.4	49.4	55.5	44.4	44.4	53.4
			SHC	27.6	44.0	60.5	25.9	42.4	58.9	24.1	40.7	57.2	22.2	38.9	55.5	20.3	36.9	53.4
		72	THC	69.6	69.6	69.6	65.1	65.1	65.1	60.2	60.2	60.2	55.0	55.0	55.0	49.6	49.6	49.6
			SHC	19.6	35.4	51.2	17.7	33.9	50.1	15.8	32.3	48.8	13.9	30.6	47.3	12.0	28.8	45.6
		76	THC	—	75.2	75.2	—	70.8	70.8	—	65.6	65.6	—	60.1	60.1	—	54.3	54.3
			SHC	—	28.0	52.7	—	26.7	51.5	—	25.3	40.1	—	23.7	39.6	—	22.0	38.6
5250 cfm	EA (wb)	58	THC	57.6	57.6	72.2	54.4	54.4	68.2	50.9	50.9	63.8	47.2	47.2	59.2	43.3	43.3	54.4
			SHC	42.9	57.6	72.2	40.5	54.4	68.2	37.9	50.9	63.8	35.1	47.2	59.2	32.3	43.3	54.4
		62	THC	58.6	58.6	73.7	54.9	54.9	70.1	51.0	51.0	68.1	47.3	47.3	63.1	43.4	43.4	58.1
			SHC	37.5	55.6	73.7	35.4	52.8	70.1	33.6	50.9	68.1	31.2	47.1	63.1	28.7	43.4	58.1
		67	THC	64.4	64.4	65.8	60.1	60.1	64.1	55.4	55.4	62.5	50.5	50.5	60.5	45.6	45.6	58.4
			SHC	28.4	47.1	65.8	26.7	45.4	64.1	24.9	43.7	62.5	23.0	41.7	60.5	21.2	39.8	58.4
		72	THC	70.9	70.9	70.9	66.4	66.4	66.4	61.4	61.4	61.4	56.1	56.1	56.1	50.6	50.6	50.6
			SHC	18.9	37.2	55.6	17.2	35.8	54.3	15.4	34.1	52.8	13.5	32.4	51.3	11.6	30.6	49.5
		76	THC	—	76.8	76.8	—	72.1	72.1	—	66.8	66.8	—	61.0	61.0	—	55.1	55.1
			SHC	—	29.0	44.1	—	27.7	44.5	—	26.2	44.2	—	24.5	43.2	—	22.8	41.9
6000 cfm	EA (wb)	58	THC	59.8	59.8	75.0	56.5	56.5	70.8	52.7	52.7	66.2	48.9	48.9	61.3	44.8	44.8	56.2
			SHC	44.5	59.8	75.0	42.1	56.5	70.8	39.3	52.7	66.2	36.4	48.9	61.3	33.4	44.8	56.2
		62	THC	60.3	60.3	78.0	56.7	56.7	74.7	53.3	53.3	67.5	48.9	48.9	65.6	44.8	44.8	60.0
			SHC	39.1	58.6	78.0	37.2	56.0	74.7	34.2	50.9	67.5	32.3	48.9	65.6	29.6	44.8	60.0
		67	THC	65.7	65.7	70.8	61.3	61.3	69.0	57.9	57.9	62.9	51.4	51.4	65.1	46.1	46.1	62.7
			SHC	29.1	50.0	70.8	27.5	48.3	69.0	25.4	44.2	62.9	23.8	44.4	65.1	21.9	42.3	62.7
		72	THC	72.1	72.1	72.1	67.5	67.5	67.5	62.4	62.4	62.4	57.0	57.0	57.0	51.4	51.4	53.2
			SHC	18.3	38.9	59.5	16.7	37.4	58.2	14.9	35.8	56.7	13.0	34.0	55.0	11.2	32.2	53.2
		76	THC	—	78.1	78.1	—	73.2	73.2	—	67.8	67.8	—	61.8	61.8	—	55.8	55.8
			SHC	—	29.9	48.7	—	28.5	48.4	—	27.0	47.5	—	25.2	46.4	—	23.5	44.9
6750 cfm	EA (wb)	58	THC	61.6	61.6	77.4	58.3	58.3	73.1	54.3	54.3	68.2	50.3	50.3	63.1	46.0	46.0	57.8
			SHC	45.9	61.6	77.4	43.4	58.3	73.1	40.5	54.3	68.2	37.5	50.3	63.1	34.3	46.0	57.8
		62	THC	62.0	62.0	81.4	58.5	58.5	77.1	55.0	55.0	69.0	50.5	50.5	67.6	46.0	46.0	61.6
			SHC	40.5	61.0	81.4	38.3	57.7	77.1	35.1	52.0	69.0	33.3	50.5	67.6	30.4	46.0	61.6
		67	THC	66.7	66.7	75.5	62.2	62.2	73.8	57.2	57.2	71.9	52.1	52.1	69.6	46.8	46.8	66.4
			SHC	29.8	52.7	75.5	28.2	51.0	73.8	26.4	49.1	71.9	24.5	47.1	69.6	22.6	44.5	66.4
		72	THC	73.1	73.1	73.1	68.4	68.4	68.4	63.3	63.3	63.3	57.7	57.7	58.6	51.9	51.9	56.6
			SHC	17.8	40.5	63.3	16.1	39.0	61.8	14.4	37.3	60.3	12.5	35.5	58.6	10.7	33.7	56.6
		76	THC	—	79.0	79.0	—	74.1	74.1	—	68.4	68.4	—	62.5	62.5	—	56.4	56.4
			SHC	—	30.6	52.3	—	29.2	51.6	—	27.6	50.6	—	25.8	49.3	—	24.1	47.7

LEGEND

db — dry bulb
EA — Entering Air (°F)
SHC — Sensible Heat Capacity (1000 Btuh) gross
THC — Total Capacity (1000 Btuh) gross
wb — wet bulb

Performance data (cont)

CAS241/FAS240 Stage 2 Combination Ratings — 60 Hz

CAS241/FAS240				AMBIENT TEMPERATURE (°F)														
				85			95			105			115			125		
				EA (db)			EA (db)			EA (db)			EA (db)			EA (db)		
				75	80	85	75	80	85	75	80	85	75	80	85	75	80	85
6,000 cfm	EA (wb)	58	THC	215.6	215.6	238.3	208.4	208.4	231.1	199.5	199.5	225.3	190.8	190.8	215.4	181.4	181.4	204.8
			SHC	184.8	211.5	238.3	179.0	205.0	231.1	173.7	199.5	225.3	166.1	190.8	215.4	158.0	181.4	204.8
		62	THC	230.5	230.5	230.5	217.7	217.7	220.6	207.1	207.1	219.0	199.0	199.0	206.3	185.1	185.1	205.3
			SHC	162.2	189.3	216.4	161.9	191.2	220.6	159.0	189.0	219.0	150.0	178.1	206.3	146.9	176.1	205.3
		67	THC	249.0	249.0	249.0	238.9	238.9	238.9	227.9	227.9	227.9	215.9	215.9	215.9	202.8	202.8	202.8
			SHC	136.2	165.3	194.4	131.9	161.1	190.3	127.4	156.6	185.9	122.5	151.8	181.2	117.3	146.6	176.0
		72	THC	273.3	273.3	273.3	261.9	261.9	261.9	249.7	249.7	249.7	236.5	236.5	236.5	222.4	222.4	222.4
			SHC	106.3	134.3	162.3	101.9	130.2	158.5	97.1	125.7	154.3	92.2	121.0	149.7	86.9	115.9	144.8
		76	THC	—	294.6	294.6	—	282.6	282.6	—	268.8	268.8	—	254.5	254.5	—	238.4	238.4
			SHC	—	108.7	141.7	—	104.1	137.1	—	100.6	133.6	—	96.1	122.3	—	91.0	118.8
7,000 cfm	EA (wb)	58	THC	225.8	225.8	255.0	218.2	218.2	246.3	209.6	209.6	236.6	200.4	200.4	226.2	190.3	190.3	214.8
			SHC	196.7	225.8	255.0	190.1	218.2	246.3	182.6	209.6	236.6	174.6	200.4	226.2	165.8	190.3	214.8
		62	THC	234.3	234.3	248.6	224.3	224.3	241.4	214.0	214.0	236.2	202.7	202.7	230.0	192.7	192.7	216.7
			SHC	182.1	215.4	248.6	174.2	207.8	241.4	169.3	202.7	236.2	163.8	196.9	230.0	154.6	185.7	216.7
		67	THC	256.4	256.4	256.4	245.6	245.6	245.6	234.0	234.0	234.0	221.4	221.4	221.4	207.6	207.6	207.6
			SHC	144.0	177.5	211.1	139.6	173.2	206.9	135.0	168.7	202.3	130.0	163.7	197.4	124.7	158.4	192.1
		72	THC	280.6	280.6	280.6	268.6	268.6	268.6	255.8	255.8	255.8	242.1	242.1	242.1	227.3	227.3	227.3
			SHC	108.9	141.6	174.3	104.4	137.3	170.2	99.7	132.7	165.8	94.7	127.9	161.1	89.4	122.7	156.1
		76	THC	—	301.8	301.8	—	288.7	288.7	—	274.5	274.5	—	259.4	259.4	—	243.0	243.0
			SHC	—	112.4	150.9	—	108.4	137.5	—	103.9	134.9	—	99.2	131.1	—	94.0	126.6
8,000 cfm	EA (wb)	58	THC	235.6	235.6	265.9	227.1	227.1	256.4	218.1	218.1	246.2	208.3	208.3	235.1	197.5	197.5	222.9
			SHC	205.3	235.6	265.9	197.9	227.1	256.4	190.0	218.1	246.2	181.5	208.3	235.1	172.1	197.5	222.9
		62	THC	240.0	240.0	265.1	229.9	229.9	259.4	220.1	220.1	251.3	210.6	210.6	239.4	202.6	202.6	217.3
			SHC	190.1	227.6	265.1	185.0	222.2	259.4	178.8	215.0	251.3	170.4	204.9	239.4	157.0	187.1	217.3
		67	THC	262.0	262.0	262.0	250.8	250.8	250.8	238.7	238.7	238.7	225.5	225.5	225.5	211.5	211.5	211.5
			SHC	151.3	189.1	227.0	146.8	184.7	222.6	142.2	180.0	217.9	137.2	175.1	213.0	131.7	169.5	207.3
		72	THC	286.2	286.2	286.2	273.8	273.8	273.8	260.6	260.6	260.6	246.5	246.5	246.5	230.8	230.8	230.8
			SHC	111.1	148.2	185.3	106.7	143.9	181.1	101.9	139.3	176.6	96.9	134.4	171.8	91.5	129.0	166.5
		76	THC	—	307.2	307.2	—	293.6	293.6	—	279.2	279.2	—	263.3	263.3	—	246.4	246.4
			SHC	—	115.5	149.6	—	111.2	146.4	—	106.7	142.7	—	101.7	138.3	—	96.4	133.3
9,000 cfm	EA (wb)	58	THC	243.4	243.4	274.7	234.7	234.7	264.8	225.2	225.2	254.1	215.1	215.1	242.7	203.5	203.5	229.6
			SHC	212.2	243.4	274.7	204.5	234.7	264.8	196.3	225.2	254.1	187.4	215.1	242.7	177.4	203.5	229.6
		62	THC	245.3	245.3	280.3	235.0	235.0	275.3	230.2	230.2	250.2	217.6	217.6	243.1	203.7	203.7	238.6
			SHC	199.4	239.9	280.3	194.7	235.0	275.3	180.2	215.2	250.2	173.9	208.5	243.1	168.8	203.7	238.6
		67	THC	266.6	266.6	266.6	254.9	254.9	254.9	242.5	242.5	242.5	229.1	229.1	229.1	214.3	214.3	222.0
			SHC	158.2	200.2	242.1	153.7	195.7	237.7	149.0	190.9	232.9	143.9	185.7	227.6	138.4	180.2	222.0
		72	THC	290.8	290.8	290.8	277.8	277.8	277.8	264.2	264.2	264.2	249.6	249.6	249.6	233.7	233.7	233.7
			SHC	113.1	154.4	195.7	108.5	150.0	191.4	103.8	145.3	186.8	98.8	140.3	181.9	93.4	135.0	176.5
		76	THC	—	311.5	311.5	—	297.4	297.4	—	282.4	282.4	—	266.4	266.4	—	249.0	249.0
			SHC	—	117.8	157.2	—	113.5	153.5	—	108.8	149.3	—	103.8	144.6	—	98.4	139.4
10,000 cfm	EA (wb)	58	THC	250.4	250.4	282.5	241.3	241.3	272.2	231.3	231.3	260.9	220.5	220.5	248.8	208.8	208.8	235.6
			SHC	218.2	250.4	282.5	210.3	241.3	272.2	201.6	231.3	260.9	192.2	220.5	248.8	182.0	208.8	235.6
		62	THC	250.6	250.6	293.5	245.3	245.3	275.2	234.0	234.0	262.7	220.9	220.9	258.8	208.8	208.8	244.6
			SHC	207.7	250.6	293.5	196.6	235.9	275.2	187.7	225.2	262.7	183.1	220.9	258.8	173.0	208.8	244.6
		67	THC	270.4	270.4	270.4	258.4	258.4	258.4	245.6	245.6	247.3	231.6	231.6	241.9	216.7	216.7	235.8
			SHC	164.9	210.8	256.8	160.3	206.3	252.2	155.6	201.4	247.3	150.4	196.2	241.9	144.9	190.3	235.8
		72	THC	294.4	294.4	294.4	281.3	281.3	281.3	267.4	267.4	267.4	252.3	252.3	252.3	235.9	235.9	235.9
			SHC	114.8	160.2	205.6	110.3	155.7	201.2	105.6	151.0	196.5	102.9	148.3	193.7	95.1	140.5	186.0
		76	THC	—	314.9	314.9	—	300.5	300.5	—	271.5	271.5	—	269.1	269.1	—	251.3	251.3
			SHC	—	119.7	163.6	—	115.3	159.6	—	106.2	150.8	—	105.5	150.4	—	100.0	145.0

LEGEND

db — dry bulb
EA — Entering Air (°F)
SHC — Sensible Heat Capacity (1000 Btuh) gross
THC — Total Capacity (1000 Btuh) gross
wb — wet bulb

Performance data (cont)

CAS241/FAS240 Stage 1 Combination Ratings — 60 Hz

CAS241/FAS240				AMBIENT TEMPERATURE (°F)														
				85			95			105			115			125		
				EA (db)			EA (db)			EA (db)			EA (db)			EA (db)		
				75	80	85	75	80	85	75	80	85	75	80	85	75	80	85
5000 cfm	EA (wb)	58	THC	133.2	133.2	150.2	128.4	128.4	144.8	123.3	123.3	139.0	117.7	117.7	132.7	111.6	111.6	125.8
			SHC	116.3	133.2	150.2	112.1	128.4	144.8	107.6	123.3	139.0	102.7	117.7	132.7	97.4	111.6	125.8
		62	THC	134.4	134.4	153.7	128.6	128.6	150.3	123.4	123.4	144.4	117.8	117.8	137.8	111.7	111.7	130.7
			SHC	109.6	131.7	153.7	106.7	128.5	150.3	102.4	123.4	144.4	97.8	117.8	137.8	92.7	111.7	130.7
		67	THC	144.3	144.3	144.3	137.9	137.9	137.9	131.1	131.1	132.6	123.9	123.9	129.8	116.0	116.0	126.8
			SHC	89.2	113.4	137.6	86.7	110.9	135.1	84.2	108.4	132.6	81.4	105.6	129.8	78.5	102.6	126.8
		72	THC	158.4	158.4	158.4	151.4	151.4	151.4	143.9	143.9	143.9	136.0	136.0	136.0	—	—	—
			SHC	64.5	88.3	112.0	62.0	85.9	109.7	59.4	83.4	107.3	56.7	80.7	104.7	—	—	—
		76	THC	—	—	—	—	—	—	—	—	—	—	—	—	—	—	—
			SHC	—	—	—	—	—	—	—	—	—	—	—	—	—	—	—
6000 cfm	EA (wb)	58	THC	140.1	140.1	157.9	134.8	134.8	152.0	129.2	129.2	145.7	123.2	123.2	138.9	116.6	116.6	131.4
			SHC	122.2	140.1	157.9	117.6	134.8	152.0	112.8	129.2	145.7	107.5	123.2	138.9	101.7	116.6	131.4
		62	THC	140.1	140.1	164.0	134.9	134.9	157.8	129.3	129.3	151.3	123.3	123.3	144.3	116.7	116.7	136.5
			SHC	116.3	140.1	164.0	112.0	134.9	157.8	107.3	129.3	151.3	102.4	123.3	144.3	96.8	116.7	136.5
		67	THC	147.6	147.6	153.3	140.9	140.9	150.6	133.8	133.8	147.8	126.3	126.3	144.6	118.3	118.3	140.8
			SHC	96.3	124.8	153.3	93.8	122.2	150.6	91.1	119.5	147.8	88.2	116.4	144.6	84.9	112.9	140.8
		72	THC	161.8	161.8	161.8	154.4	154.4	154.4	146.7	146.7	146.7	—	—	—	—	—	—
			SHC	67.0	95.1	123.1	64.5	92.6	120.8	61.9	90.1	118.4	—	—	—	—	—	—
		76	THC	—	—	—	—	—	—	—	—	—	—	—	—	—	—	—
			SHC	—	—	—	—	—	—	—	—	—	—	—	—	—	—	—
7000 cfm	EA (wb)	58	THC	145.5	145.5	164.0	139.9	139.9	157.7	133.9	133.9	151.0	127.5	127.5	143.7	120.5	120.5	135.8
			SHC	127.0	145.5	164.0	122.1	139.9	157.7	116.9	133.9	151.0	111.3	127.5	143.7	105.1	120.5	135.8
		62	THC	145.6	145.6	170.3	140.0	140.0	163.8	134.0	134.0	156.8	127.6	127.6	149.2	120.5	120.5	141.0
			SHC	120.8	145.6	170.3	116.2	140.0	163.8	111.3	134.0	156.8	105.9	127.6	149.2	100.1	120.5	141.0
		67	THC	149.9	149.9	167.8	143.1	143.1	164.7	136.0	136.0	161.3	128.5	128.5	156.9	121.7	121.7	146.4
			SHC	103.0	135.4	167.8	100.3	132.5	164.7	97.3	129.3	161.3	93.9	125.4	156.9	88.0	117.2	146.4
		72	THC	164.3	164.3	164.3	—	—	—	—	—	—	—	—	—	—	—	—
			SHC	69.2	101.5	133.7	—	—	—	—	—	—	—	—	—	—	—	—
		76	THC	—	—	—	—	—	—	—	—	—	—	—	—	—	—	—
			SHC	—	—	—	—	—	—	—	—	—	—	—	—	—	—	—
8000 cfm	EA (wb)	58	THC	149.8	149.8	168.9	143.9	143.9	162.2	137.6	137.6	155.2	130.9	130.9	147.6	123.5	123.5	139.2
			SHC	130.7	149.8	168.9	125.6	143.9	162.2	120.1	137.6	155.2	114.3	130.9	147.6	107.8	123.5	139.2
		62	THC	149.9	149.9	175.4	144.0	144.0	168.4	137.7	137.7	161.1	131.1	131.1	153.3	123.5	123.5	144.5
			SHC	124.4	149.9	175.4	119.5	144.0	168.4	114.3	137.7	161.1	108.8	131.1	153.3	102.5	123.5	144.5
		67	THC	152.1	152.1	180.6	145.3	145.3	176.4	137.8	137.8	172.9	132.9	132.9	157.1	124.2	124.2	152.1
			SHC	109.0	144.8	180.6	105.8	141.1	176.4	102.8	137.8	172.9	94.9	126.0	157.1	91.0	121.5	152.1
		72	THC	—	—	—	—	—	—	—	—	—	—	—	—	—	—	—
			SHC	—	—	—	—	—	—	—	—	—	—	—	—	—	—	—
		76	THC	—	—	—	—	—	—	—	—	—	—	—	—	—	—	—
			SHC	—	—	—	—	—	—	—	—	—	—	—	—	—	—	—
9000 cfm	EA (wb)	58	THC	153.3	153.3	172.8	147.2	147.2	166.0	140.7	140.7	158.6	133.6	133.6	150.6	—	—	—
			SHC	133.8	153.3	172.8	128.5	147.2	166.0	122.8	140.7	158.6	116.6	133.6	150.6	—	—	—
		62	THC	153.5	153.5	179.5	147.3	147.3	172.3	140.8	140.8	164.8	133.7	133.7	156.4	—	—	—
			SHC	127.4	153.5	179.5	122.3	147.3	172.3	116.9	140.8	164.8	111.0	133.7	156.4	—	—	—
		67	THC	154.2	154.2	190.2	147.7	147.7	183.1	141.6	141.6	172.8	133.8	133.8	167.8	—	—	—
			SHC	113.6	151.9	190.2	109.2	146.2	183.1	103.4	138.1	172.8	99.8	133.8	167.8	—	—	—
		72	THC	—	—	—	—	—	—	—	—	—	—	—	—	—	—	—
			SHC	—	—	—	—	—	—	—	—	—	—	—	—	—	—	—
		76	THC	—	—	—	—	—	—	—	—	—	—	—	—	—	—	—
			SHC	—	—	—	—	—	—	—	—	—	—	—	—	—	—	—

LEGEND

db — dry bulb
EA — Entering Air (°F)
SHC — Sensible Heat Capacity (1000 Btuh) gross
THC — Total Capacity (1000 Btuh) gross
wb — wet bulb

Performance data (cont)

CAS243/FAS240 Stage 3 Combination Ratings — 60 Hz

CAS243/FAS240				AMBIENT TEMPERATURE (°F)														
				85			95			105			115			125		
				EA (db)			EA (db)			EA (db)			EA (db)			EA (db)		
				75	80	85	75	80	85	75	80	85	75	80	85	75	80	85
6,000 cfm	EA (wb)	58	THC	218.9	218.9	245.1	210.7	210.7	237.4	201.8	201.8	228.0	192.3	192.3	217.3	182.1	182.1	205.8
			SHC	189.2	217.2	245.1	182.9	210.2	237.4	175.5	201.8	228.0	167.3	192.3	217.3	158.5	182.1	205.8
		62	THC	234.0	234.0	234.0	220.9	220.9	225.0	209.5	209.5	219.9	197.6	197.6	214.4	184.9	184.9	206.9
			SHC	176.0	195.0	214.0	164.6	194.8	225.0	159.5	189.7	219.9	154.1	184.2	214.4	147.5	177.2	206.9
		67	THC	253.5	253.5	253.5	242.0	242.0	242.0	229.9	229.9	229.9	216.5	216.5	216.5	202.4	202.4	202.4
			SHC	138.1	168.0	198.0	133.4	163.4	193.4	128.5	158.6	188.8	123.2	153.4	183.6	117.7	148.0	178.2
		72	THC	278.0	278.0	278.0	265.4	265.4	265.4	252.2	252.2	252.2	237.5	237.5	237.5	222.0	222.0	222.0
			SHC	107.1	136.0	164.9	102.2	131.4	160.6	97.2	126.7	156.2	91.8	121.5	151.2	86.2	116.1	146.0
		76	THC	—	298.9	298.9	—	285.7	285.7	—	271.5	271.5	—	255.7	255.7	—	238.6	238.6
			SHC	—	108.3	141.3	—	104.4	137.4	—	100.3	129.6	—	95.5	122.2	—	90.2	118.5
7,000 cfm	EA (wb)	58	THC	230.0	230.0	259.8	221.5	221.5	250.3	212.1	212.1	239.6	201.7	201.7	227.9	190.8	190.8	215.6
			SHC	200.1	230.0	259.8	192.7	221.5	250.3	184.5	212.1	239.6	175.6	201.7	227.9	166.0	190.8	215.6
		62	THC	237.9	237.9	251.5	227.4	227.4	246.6	215.6	215.6	240.6	203.6	203.6	232.1	191.7	191.7	221.9
			SHC	182.0	216.7	251.5	177.3	211.9	246.6	171.7	206.2	240.6	164.8	198.4	232.1	157.0	189.4	221.9
		67	THC	260.6	260.6	260.6	248.8	248.8	248.8	235.4	235.4	235.4	221.5	221.5	221.5	206.8	206.8	206.8
			SHC	146.0	180.6	215.2	141.3	176.0	210.7	136.1	170.9	205.6	130.8	165.6	200.4	125.3	160.2	195.0
		72	THC	284.8	284.8	284.8	272.0	272.0	272.0	257.7	257.7	257.7	242.9	242.9	242.9	226.5	226.5	226.5
			SHC	109.4	143.2	177	104.7	138.8	172.8	99.6	133.8	168.1	94.3	128.8	163.2	88.7	123.2	157.8
		76	THC	—	306.9	306.9	—	292.4	292.4	—	277.0	277.0	—	260.3	260.3	—	243.0	243.0
			SHC	—	112.8	146.3	—	108.4	138.4	—	103.7	135.4	—	98.5	131.3	—	93.2	126.7
8,000 cfm	EA (wb)	58	THC	239.3	239.3	270.4	230.3	230.3	260.2	220.5	220.5	249.1	209.6	209.6	236.8	197.9	197.9	223.5
			SHC	208.3	239.3	270.4	200.4	230.3	260.2	191.8	220.5	249.1	182.4	209.6	236.8	172.2	197.9	223.5
		62	THC	243.6	243.6	271.1	232.9	232.9	265.0	221.6	221.6	256.4	211.3	211.3	241.0	199.0	199.0	229.2
			SHC	193.6	232.4	271.1	188.3	226.6	265.0	181.4	218.9	256.4	171.2	206.1	241.0	162.3	195.7	229.2
		67	THC	265.7	265.7	265.7	253.8	253.8	253.8	239.8	239.8	239.8	225.6	225.6	225.6	210.3	210.3	211.2
			SHC	153.3	192.4	231.5	148.8	187.9	227.1	143.5	182.7	221.9	138.3	177.5	216.7	132.7	171.9	211.2
		72	THC	290.5	290.5	290.5	277.1	277.1	277.1	262.7	262.7	262.7	247.2	247.2	247.2	229.9	229.9	229.9
			SHC	111.7	150.1	188.6	106.9	145.6	184.3	101.9	140.7	179.5	96.7	135.6	174.6	90.9	129.9	169.0
		76	THC	—	312.0	312.0	—	298.1	298.1	—	282.1	282.1	—	264.3	264.3	—	246.5	246.5
			SHC	—	115.8	151.0	—	111.5	147.8	—	106.6	143.8	—	101.2	138.9	—	95.8	134.0
9,000 cfm	EA (wb)	58	THC	247.5	247.5	279.6	238.0	238.0	268.9	227.4	227.4	256.9	216.1	216.1	244.2	203.8	203.8	230.2
			SHC	215.4	247.5	279.6	207.1	238.0	268.9	197.9	227.4	256.9	188.1	216.1	244.2	177.3	203.8	230.2
		62	THC	249.1	249.1	287.8	239.2	239.2	277.6	229.0	229.0	262.0	216.6	216.6	252.3	204.0	204.0	239.1
			SHC	203.7	245.8	287.8	196.3	237.0	277.6	185.9	224.0	262.0	178.3	215.3	252.3	168.8	204.0	239.1
		67	THC	270.5	270.5	270.5	257.3	257.3	257.3	243.4	243.4	243.4	228.8	228.8	232.6	213.0	213.0	226.9
			SHC	160.6	204.1	247.6	155.7	199.3	242.8	150.7	194.2	237.8	145.5	189.0	232.6	139.9	183.4	226.9
		72	THC	294.8	294.8	294.8	280.9	280.9	280.9	265.9	265.9	265.9	250.0	250.0	250.0	232.6	232.6	232.6
			SHC	113.6	156.6	199.6	108.9	152.0	195.2	103.8	147.1	190.4	98.5	141.9	185.3	92.8	136.3	179.8
		76	THC	—	316.4	316.4	—	301.5	301.5	—	285.0	285.0	—	268	268.0	—	249.4	249.4
			SHC	—	118.3	159.0	—	113.7	155.1	—	108.8	150.8	—	103.6	146.0	—	98.1	140.9
10,000 cfm	EA (wb)	58	THC	254.6	254.6	287.7	244.9	244.9	276.6	233.7	233.7	264.0	221.7	221.7	250.5	208.8	208.8	235.9
			SHC	221.6	254.6	287.7	213.1	244.9	276.6	203.4	233.7	264.0	193.0	221.7	250.5	181.7	208.8	235.9
		62	THC	256.2	256.2	293.6	246.5	246.5	281.5	234.0	234.0	272.6	221.6	221.6	259.8	209.0	209.0	245.0
			SHC	208.3	251.0	293.6	199.8	240.7	281.5	192.6	232.6	272.6	183.4	221.6	259.8	172.9	209.0	245.0
		67	THC	273.5	273.5	273.5	260.6	260.6	260.6	246.3	246.3	253.2	230.9	230.9	247.7	215.1	215.1	241.6
			SHC	167.3	215.1	262.8	162.7	210.5	258.2	157.7	205.4	253.2	152.3	200.0	247.7	146.7	194.1	241.6
		72	THC	298.4	298.4	298.4	284.3	284.3	284.3	269.3	269.3	269.3	252.6	252.6	252.6	234.8	234.8	234.8
			SHC	115.3	162.7	210.1	110.6	158.1	205.7	105.7	153.4	201.0	100.3	148.1	195.8	94.7	142.5	190.2
		76	THC	—	320.7	320.7	—	305.4	305.4	—	288.6	288.6	—	270.6	270.6	—	251.7	251.7
			SHC	—	120.5	166.1	—	115.9	162.0	—	110.9	157.4	—	105.5	152.4	—	100.0	147.1

LEGEND

db — dry bulb
EA — Entering Air (°F)
SHC — Sensible Heat Capacity (1000 Btuh) gross
THC — Total Capacity (1000 Btuh) gross
wb — wet bulb

Performance data (cont)

CAS243/FAS240 Stage 2 Combination Ratings — 60 Hz

CAS243/FAS240				AMBIENT TEMPERATURE (°F)														
				85			95			105			115			125		
				EA (db)			EA (db)			EA (db)			EA (db)			EA (db)		
				75	80	85	75	80	85	75	80	85	75	80	85	75	80	85
5000 cfm	EA (wb)	58	THC	176.7	176.7	194.4	168.3	168.3	187.0	159.4	159.4	179.0	150.5	150.5	168.4	140.2	140.2	159.1
			SHC	149.0	171.7	194.4	142.9	165.0	187.0	136.7	157.8	179.0	128.7	148.6	168.4	121.2	140.2	159.1
		62	THC	185.4	185.4	187.2	176.2	176.2	180.0	166.0	166.0	172.2	155.6	155.6	163.9	144.7	144.7	154.9
			SHC	135.9	161.6	187.2	130.2	155.1	180.0	123.8	148.0	172.2	117.1	140.5	163.9	110.1	132.5	154.9
		67	THC	206.6	206.6	206.6	195.5	195.5	195.5	183.5	183.5	183.5	170.7	170.7	170.7	156.8	156.8	156.8
			SHC	111.5	137.0	162.5	107.1	132.7	158.3	102.3	128.0	153.7	97.5	123.2	148.9	92.3	118.0	143.8
		72	THC	228.5	228.5	228.5	217.5	217.5	217.5	204.4	204.4	204.4	190.7	190.7	190.7	175.4	175.4	175.4
			SHC	87.0	111.2	135.4	82.7	107.5	132.3	77.9	103.0	128.0	73.0	98.2	123.4	67.6	93.0	118.3
		76	THC	—	247.7	247.7	—	235.9	235.9	—	222.1	222.1	—	207.3	207.3	—	190.6	190.6
			SHC	—	91.2	117.1	—	87.3	113.5	—	82.7	109.1	—	77.6	104.1	—	72.5	99.0
6000 cfm	EA (wb)	58	THC	188.8	188.8	211.1	179.5	179.5	203.5	170.2	170.2	193.0	160.3	160.3	181.8	149.9	149.9	170.1
			SHC	161.7	186.4	211.1	155.4	179.4	203.5	147.3	170.2	193.0	138.8	160.3	181.8	129.8	149.9	170.1
		62	THC	195.3	195.3	204.9	185.7	185.7	197.2	175.2	175.2	188.5	163.9	163.9	179.3	152.0	152.0	170.5
			SHC	147.1	176.0	204.9	141.0	169.1	197.2	134.1	161.3	188.5	126.8	153.0	179.3	119.8	145.1	170.5
		67	THC	214.8	214.8	214.8	204.1	204.1	204.1	190.1	190.1	190.1	176.3	176.3	176.3	162.0	162.0	162.0
			SHC	120.5	150.9	181.3	116.5	146.9	177.4	111.2	141.7	172.1	106.1	136.6	167.1	100.6	130.9	161.1
		72	THC	237.3	237.3	237.3	225.0	225.0	225.0	211.2	211.2	211.2	196.2	196.2	196.2	180.5	180.5	180.5
			SHC	90.5	120.2	149.9	86.1	116.0	145.8	81.3	111.3	141.3	76.1	106.2	136.3	70.9	101.0	131.1
		76	THC	—	256.7	256.7	—	243.8	243.8	—	229.0	229.0	—	212.7	212.7	—	195.1	195.1
			SHC	—	95.0	126.5	—	90.9	122.4	—	86.6	118.2	—	81.6	110.0	—	76.1	104.9
7000 cfm	EA (wb)	58	THC	198.6	198.6	225.1	189.4	189.4	214.7	179.5	179.5	203.5	168.9	168.9	191.5	157.5	157.5	178.5
			SHC	172.1	198.6	225.1	164.1	189.4	214.7	155.5	179.5	203.5	146.4	168.9	191.5	136.4	157.5	178.5
		62	THC	203.5	203.5	220.5	193.6	193.6	212.4	182.1	182.1	204.2	170.2	170.2	194.1	159.4	159.4	182.3
			SHC	156.9	188.7	220.5	150.5	181.5	212.4	143.9	174.0	204.2	136.2	165.1	194.1	128.2	155.3	182.3
		67	THC	220.5	220.5	220.5	208.4	208.4	208.4	194.8	194.8	194.8	180.6	180.6	183.4	167.0	167.0	172.4
			SHC	128.8	163.9	199.0	124.3	159.4	194.6	119.4	154.4	189.5	113.9	148.6	183.4	106.2	139.3	172.4
		72	THC	243.3	243.3	243.3	230.8	230.8	230.8	216.1	216.1	216.1	200.5	200.5	200.5	184.5	184.5	184.5
			SHC	93.5	128.0	162.5	89.2	123.8	158.4	84.2	118.9	153.5	79.0	113.8	148.5	73.8	108.5	143.2
		76	THC	—	262.7	262.7	—	248.7	248.7	—	233.2	233.2	—	216.5	216.5	—	198.2	198.2
			SHC	—	98.9	135.5	—	94.7	127.1	—	89.9	123	—	84.8	118.1	—	79.0	112.1
8000 cfm	EA (wb)	58	THC	207.1	207.1	234.6	197.6	197.6	223.9	187.2	187.2	212.1	175.8	175.8	199.2	163.7	163.7	185.4
			SHC	179.5	207.1	234.6	171.3	197.6	223.9	162.3	187.2	212.1	152.4	175.8	199.2	141.9	163.7	185.4
		62	THC	209.9	209.9	235.7	199.5	199.5	227.0	188.2	188.2	218.0	176.6	176.6	205.1	164.5	164.5	190.7
			SHC	166.4	201.1	235.7	159.6	193.3	227.0	152.8	185.4	218.0	143.9	174.5	205.1	133.9	162.3	190.7
		67	THC	224.8	224.8	224.8	212.4	212.4	212.4	198.8	198.8	205.1	186.0	186.0	193.7	171.6	171.6	183.3
			SHC	136.8	176.4	216.0	132.1	171.7	211.2	126.8	165.9	205.1	119.1	156.4	193.7	111.6	147.5	183.3
		72	THC	247.9	247.9	247.9	234.6	234.6	234.6	219.9	219.9	219.9	203.9	203.9	203.9	187.0	187.0	187.0
			SHC	96.1	135.2	174.3	91.7	130.8	170.0	86.8	126.0	165.2	81.6	120.8	160.0	76.2	115.3	154.4
		76	THC	—	266.7	266.7	—	253.2	253.2	—	237.1	237.1	—	218.9	218.9	—	199.9	199.9
			SHC	—	102.0	139.1	—	97.9	135.4	—	92.9	130.7	—	87.3	124.9	—	81.1	118.1
9000 cfm	EA (wb)	58	THC	214.4	214.4	242.8	204.5	204.5	231.6	193.5	193.5	219.1	181.6	181.6	205.6	169.0	169.0	191.4
			SHC	186.0	214.4	242.8	177.4	204.5	231.6	167.8	193.5	219.1	157.5	181.6	205.6	146.6	169.0	191.4
		62	THC	215.6	215.6	249.0	205.1	205.1	238.9	193.7	193.7	227.7	182.0	182.0	214.0	168.9	168.9	198.7
			SHC	174.9	211.9	249.0	167.7	203.3	238.9	159.5	193.6	227.7	149.9	182.0	214.0	139.2	168.9	198.7
		67	THC	228.7	228.7	231.8	215.8	215.8	225.4	203.3	203.3	214.7	189.4	189.4	204.7	174.8	174.8	192.9
			SHC	144.1	188.0	231.8	138.9	182.1	225.4	131.5	173.1	214.7	124.3	164.5	204.7	116.2	154.5	192.9
		72	THC	251.6	251.6	251.6	237.9	237.9	237.9	223.0	223.0	223.0	206.5	206.5	206.5	189.2	189.2	189.2
			SHC	98.5	142.1	185.6	94.0	137.6	181.2	89.2	132.8	176.4	84.0	127.5	171.0	78.5	121.7	165.0
		76	THC	—	270.4	270.4	—	256.2	256.2	—	239.1	239.1	—	221.4	221.4	—	202.0	202.0
			SHC	—	104.6	146.5	—	100.3	142.4	—	95.0	136.9	—	89.5	131.3	—	83.1	123.9

LEGEND

db — dry bulb
EA — Entering Air (°F)
SHC — Sensible Heat Capacity (1000 Btuh) gross
THC — Total Capacity (1000 Btuh) gross
wb — wet bulb

Performance data (cont)

CAS243/FAS240 Stage 1 Combination Ratings — 60 Hz

CAS243/FAS240				AMBIENT TEMPERATURE (°F)														
				85			95			105			115			125		
				EA (db)			EA (db)			EA (db)			EA (db)			EA (db)		
				75	80	85	75	80	85	75	80	85	75	80	85	75	80	85
5000 cfm	EA (wb)	58	THC	78.6	78.6	99.9	78.6	78.6	99.9	78.6	78.6	99.8	78.6	78.6	99.8	78.6	78.6	99.9
			SHC	57.4	78.6	99.9	57.4	78.6	99.9	57.4	78.6	99.8	57.4	78.6	99.8	57.4	78.6	99.9
		62	THC	80.5	80.5	102.8	80.6	80.6	103.1	80.5	80.5	102.8	80.5	80.5	102.8	80.5	80.5	102.8
			SHC	50.0	76.4	102.8	50.1	76.6	103.1	50.0	76.4	102.8	50.0	76.4	102.8	50.0	76.4	102.8
		67	THC	90.0	90.0	90.3	90.0	90.0	90.4	90.0	90.0	90.3	90.0	90.0	90.4	90.0	90.0	90.4
			SHC	37.6	64.0	90.3	37.6	64.0	90.4	37.6	64.0	90.3	37.6	64.0	90.4	37.6	64.0	90.4
		72	THC	99.3	99.3	99.3	99.3	99.3	99.3	99.3	99.3	99.3	99.3	99.3	99.3	99.3	99.3	99.3
			SHC	24.9	50.4	75.9	24.9	50.4	75.9	24.9	50.5	76.0	24.9	50.4	75.9	24.9	50.5	76.0
		76	THC	—	108.4	108.4	—	108.5	108.5	—	108.2	108.2	—	108.4	108.4	—	108.3	108.3
			SHC	—	40.5	64.9	—	40.5	64.9	—	41.5	68	—	40.5	64.9	—	40.5	64.9
6000 cfm	EA (wb)	58	THC	84.3	84.3	106.9	84.3	84.3	106.9	84.4	84.4	107.0	84.3	84.3	107.0	84.3	84.3	106.9
			SHC	61.7	84.3	106.9	61.7	84.3	106.9	61.7	84.4	107.0	61.7	84.3	107.0	61.7	84.3	106.9
		62	THC	85.1	85.1	112.7	84.7	84.7	113.7	84.8	84.8	113.6	85.1	85.1	112.5	85.2	85.2	112.9
			SHC	54.0	83.4	112.7	54.2	83.9	113.7	54.2	83.9	113.6	54.1	83.3	112.5	54.1	83.5	112.9
		67	THC	93.1	93.1	102.5	93.1	93.1	102.5	93.1	93.1	102.5	93.1	93.1	102.5	93.0	93.0	102.5
			SHC	39.7	71.1	102.5	39.7	71.1	102.5	39.7	71.1	102.5	39.7	71.1	102.5	39.7	71.1	102.5
		72	THC	103.1	103.1	103.1	103.1	103.1	103.1	103.1	103.1	103.1	103.4	103.4	103.4	103.2	103.2	103.2
			SHC	24.5	55.4	86.4	24.5	55.4	86.3	24.5	55.4	86.4	26.6	57.1	87.7	24.5	55.5	86.5
		76	THC	—	111.6	111.6	—	111.7	111.7	—	111.6	111.6	—	111.6	111.6	—	111.6	111.6
			SHC	—	42.8	72.7	—	42.9	72.7	—	42.8	72.7	—	42.8	72.7	—	42.9	72.7
7000 cfm	EA (wb)	58	THC	88.9	88.9	112.6	88.9	88.9	112.6	88.9	88.9	112.6	88.9	88.9	112.6	89.0	89.0	112.7
			SHC	65.2	88.9	112.6	65.2	88.9	112.6	65.2	88.9	112.6	65.2	88.9	112.6	65.2	89.0	112.7
		62	THC	89.0	89.0	120.6	89.0	89.0	120.6	89.0	89.0	120.6	89.0	89.0	120.6	89.0	89.0	120.6
			SHC	57.4	89.0	120.6	57.4	89.0	120.6	57.4	89.0	120.6	57.4	89.0	120.6	57.4	89.0	120.6
		67	THC	95.3	95.3	114.2	95.3	95.3	114.2	95.3	95.3	114.2	95.3	95.3	114.1	95.3	95.3	114.2
			SHC	41.6	77.9	114.2	41.6	77.9	114.2	41.6	77.9	114.2	41.6	77.8	114.1	41.6	77.9	114.2
		72	THC	105.3	105.3	105.3	105.4	105.4	105.4	105.3	105.3	105.3	105.3	105.3	105.3	105.4	105.4	105.4
			SHC	23.8	59.6	95.5	23.8	59.6	95.5	23.8	59.6	95.5	23.8	59.6	95.5	23.8	59.6	95.5
		76	THC	—	113.7	113.7	—	113.8	113.8	—	113.7	113.7	—	113.8	113.8	—	113.8	113.8
			SHC	—	44.9	79.7	—	44.9	79.7	—	44.9	79.7	—	44.9	79.7	—	44.9	79.7
8000 cfm	EA (wb)	58	THC	92.6	92.6	117.2	92.7	92.7	117.3	92.7	92.7	117.3	92.6	92.6	117.3	92.6	92.6	117.2
			SHC	68.0	92.6	117.2	68.1	92.7	117.3	68.1	92.7	117.3	68.0	92.6	117.3	68.0	92.6	117.2
		62	THC	92.7	92.7	125.4	92.7	92.7	125.4	92.7	92.7	125.4	92.7	92.7	125.4	92.7	92.7	125.5
			SHC	59.9	92.7	125.4	59.9	92.7	125.4	59.9	92.7	125.4	59.9	92.7	125.4	60.0	92.7	125.5
		67	THC	96.7	96.7	124.5	96.8	96.8	124.5	96.7	96.7	124.5	96.8	96.8	124.5	96.8	96.8	124.6
			SHC	43.2	83.9	124.5	43.2	83.9	124.5	43.2	83.9	124.5	43.2	83.9	124.5	43.3	83.9	124.6
		72	THC	107.1	107.1	107.1	107.0	107.0	107.0	107.0	107.0	107.0	107.0	107.0	107.0	107.1	107.1	107.1
			SHC	23.0	63.7	104.3	23.0	63.7	104.3	23.0	63.7	104.3	23.0	63.7	104.3	25.4	65.4	105.4
		76	THC	—	115.3	115.3	—	115.3	115.3	—	115.3	115.3	—	115.2	115.2	—	115.2	115.2
			SHC	—	46.8	86.3	—	46.8	86.2	—	46.8	86.3	—	46.8	86.2	—	46.8	86.2
9000 cfm	EA (wb)	58	THC	95.8	95.8	121.1	95.8	95.8	121.1	95.7	95.7	121	95.7	95.7	121.1	95.6	95.6	120.9
			SHC	70.4	95.8	121.1	70.4	95.8	121.1	70.3	95.7	121	70.4	95.7	121.1	70.3	95.6	120.9
		62	THC	95.8	95.8	129.6	95.7	95.7	129.4	95.8	95.8	129.5	95.9	95.9	129.6	95.9	95.9	129.6
			SHC	62.1	95.8	129.6	62.0	95.7	129.4	62.0	95.8	129.5	62.1	95.9	129.6	62.1	95.9	129.6
		67	THC	98.3	98.3	135.9	98.3	98.3	135.9	98.3	98.3	135.9	98.3	98.3	135.9	98.3	98.3	135.8
			SHC	45.1	90.5	135.9	45.1	90.5	135.9	45.1	90.5	135.9	45.1	90.5	135.9	45.1	90.5	135.8
		72	THC	108.3	108.3	112.8	108.4	108.4	112.8	108.5	108.5	112.8	108.4	108.4	112.8	108.4	108.4	112.8
			SHC	22.3	67.5	112.8	22.3	67.5	112.8	22.3	67.6	112.8	22.3	67.5	112.8	22.3	67.5	112.8
		76	THC	—	116.5	116.5	—	116.4	116.4	—	116.5	116.5	—	116.4	116.4	—	116.4	116.4
			SHC	—	48.6	92.5	—	48.6	92.5	—	48.6	92.5	—	48.6	92.4	—	48.6	92.4

LEGEND

db — dry bulb
EA — Entering Air (°F)
SHC — Sensible Heat Capacity (1000 Btuh) gross
THC — Total Capacity (1000 Btuh) gross
wb — wet bulb

Performance data (cont)

CAS303/FAS300 Stage 3 Combination Ratings — 60 Hz

CAS303/FAS300				AMBIENT TEMPERATURE (°F)														
				85			95			105			115			125		
				EA (db)			EA (db)			EA (db)			EA (db)			EA (db)		
				75	80	85	75	80	85	75	80	85	75	80	85	75	80	85
7,500 cfm	EA (wb)	58	THC	258.8	258.8	283.0	248.5	248.5	274.2	236.5	236.5	267.2	225.5	225.5	254.8	213.3	213.3	241.1
			SHC	219.6	251.3	283.0	212.3	243.3	274.2	205.7	236.5	267.2	196.1	225.5	254.8	185.6	213.3	241.1
		62	THC	270.9	270.9	270.9	258.7	258.7	262.6	245.6	245.6	256.7	231.4	231.4	249.9	216.4	216.4	242.0
			SHC	197.8	232.9	268.1	192.2	227.4	262.6	186.4	221.6	256.7	179.8	214.8	249.9	172.4	207.2	242.0
		67	THC	294.9	294.9	294.9	282.3	282.3	282.3	267.6	267.6	267.6	252.3	252.3	252.3	235.9	235.9	235.9
			SHC	160.9	195.7	230.6	155.7	190.8	225.8	149.9	185.0	220.2	143.8	179.2	214.5	137.4	172.8	208.1
		72	THC	321.7	321.7	321.7	307.8	307.8	307.8	292.2	292.2	292.2	275.4	275.4	275.4	257.1	257.1	257.1
			SHC	124.3	157.8	191.4	118.9	153.0	187.0	113.0	147.4	181.9	106.9	141.6	176.3	100.3	135.2	170.2
		76	THC	—	345.5	345.5	—	329.2	329.2	—	310.4	310.4	—	294.8	294.8	—	274.9	274.9
			SHC	—	125.9	167.1	—	121.2	162.4	—	115.8	144.1	—	111.0	143.2	—	104.9	138.7
8,750 cfm	EA (wb)	58	THC	268.2	268.2	303.6	258.4	258.4	292.0	247.5	247.5	279.7	235.8	235.8	266.5	222.6	222.6	251.6
			SHC	232.9	268.2	303.6	224.8	258.4	292.0	215.3	247.5	279.7	205.1	235.8	266.5	193.7	222.6	251.6
		62	THC	280.3	280.3	288.6	268.6	268.6	280.4	252.3	252.3	279.6	237.9	237.9	271.2	223.6	223.6	256.5
			SHC	209.7	249.2	288.6	203.2	241.8	280.4	199.8	239.7	279.6	192.5	231.8	271.2	181.8	219.2	256.5
		67	THC	302.4	302.4	302.4	288.6	288.6	288.6	273.8	273.8	273.8	257.8	257.8	257.8	240.7	240.7	240.7
			SHC	169.5	209.7	249.9	164.1	204.4	244.7	158.5	198.9	239.4	152.3	192.7	233.2	145.7	186.2	226.7
		72	THC	329.2	329.2	329.2	314.0	314.0	314.0	297.8	297.8	297.8	280.3	280.3	280.3	261.7	261.7	261.7
			SHC	126.9	166.1	205.3	121.3	160.9	200.5	115.5	155.3	195.1	109.3	149.3	189.3	102.8	143.0	183.2
		76	THC	—	352.2	352.2	—	336.3	336.3	—	318.3	318.3	—	299.9	299.9	—	279.7	279.7
			SHC	—	130.3	171.6	—	125.7	161.3	—	120.2	157.7	—	114.5	153.2	—	108.4	147.9
10,000 cfm	EA (wb)	58	THC	278.6	278.6	314.8	268.1	268.1	303	256.8	256.8	290.2	244.1	244.1	275.9	230.2	230.2	260.1
			SHC	242.3	278.6	314.8	233.2	268.1	303	223.4	256.8	290.2	212.4	244.1	275.9	200.2	230.2	260.1
		62	THC	283.9	283.9	313.8	271.3	271.3	306.8	257.6	257.6	297.1	245.1	245.1	284.0	230.6	230.6	268.9
			SHC	224.4	269.1	313.8	218.2	262.5	306.8	210.3	253.7	297.1	200.8	242.4	284.0	189.8	229.4	268.9
		67	THC	308.2	308.2	308.2	294.4	294.4	294.4	278.6	278.6	278.6	262.0	262.0	262.0	244.4	244.4	244.4
			SHC	177.7	223.0	268.2	172.4	217.8	263.1	166.4	211.7	257.1	160.3	205.7	251.0	153.8	199.1	244.4
		72	THC	334.9	334.9	334.9	319.2	319.2	319.2	303.1	303.1	303.1	284.5	284.5	284.5	265.3	265.3	265.3
			SHC	129.2	173.7	218.2	123.7	168.4	213.1	118.0	162.9	207.8	111.7	156.7	201.8	105.2	150.3	195.4
		76	THC	—	357.7	357.7	—	341.6	341.6	—	323.8	323.8	—	304.3	304.3	—	283.3	283.3
			SHC	—	133.8	174.9	—	128.9	171.4	—	123.5	167.0	—	117.6	161.9	—	111.2	156.1
11,250 cfm	EA (wb)	58	THC	287.4	287.4	324.7	276.5	276.5	312.4	264.1	264.1	298.4	250.8	250.8	283.4	236.4	236.4	267.1
			SHC	250.0	287.4	324.7	240.5	276.5	312.4	229.7	264.1	298.4	218.2	250.8	283.4	205.6	236.4	267.1
		62	THC	288.8	288.8	332.6	276.5	276.5	322.8	264.3	264.3	309.5	253.4	253.4	284.4	236.3	236.3	277.5
			SHC	235.3	284.0	332.6	227.9	275.3	322.8	218.3	263.9	309.5	202.6	243.5	284.4	195.2	236.3	277.5
		67	THC	313.3	313.3	313.3	298.1	298.1	298.1	282.4	282.4	282.4	265.3	265.3	268.2	247.2	247.2	261.3
			SHC	185.7	235.8	286.0	180.0	230.2	280.4	174.3	224.4	274.6	168.0	218.1	268.2	161.3	211.3	261.3
		72	THC	339.4	339.4	339.4	324.0	324.0	324.0	306.7	306.7	306.7	287.7	287.7	287.7	268.3	268.3	268.3
			SHC	131.3	180.8	230.3	126.0	175.6	225.3	120.1	169.9	219.8	113.7	163.6	213.5	107.3	157.3	207.3
		76	THC	—	363.0	363.0	—	346.0	346.0	—	326.9	326.9	—	307.5	307.5	—	—	—
			SHC	—	136.8	184.1	—	131.7	179.8	—	126.0	174.8	—	120.1	169.6	—	—	—
12,500 cfm	EA (wb)	58	THC	294.7	294.7	333.0	283.1	283.1	319.9	270.9	270.9	306.2	256.9	256.9	290.4	241.6	241.6	273.0
			SHC	256.4	294.7	333.0	246.3	283.1	319.9	235.7	270.9	306.2	223.5	256.9	290.4	210.2	241.6	273.0
		62	THC	295.3	295.3	346.4	283.9	283.9	329.6	270.9	270.9	316.5	257.3	257.3	301.3	241.8	241.8	283.6
			SHC	244.2	295.3	346.4	232.9	281.3	329.6	223.3	269.9	316.5	212.5	256.9	301.3	200.0	241.8	283.6
		67	THC	316.6	316.6	316.6	302.1	302.1	302.1	285.5	285.5	291.3	268.2	268.2	284.8	249.5	249.5	277.6
			SHC	193.1	248.0	302.9	187.8	242.6	297.5	181.8	236.5	291.3	175.5	230.1	284.8	168.9	223.2	277.6
		72	THC	343.1	343.1	343.1	326.7	326.7	326.7	309.3	309.3	309.3	291.1	291.1	291.1	270.6	270.6	270.6
			SHC	133.1	187.5	241.9	127.6	182.1	236.6	121.8	176.4	230.9	115.9	170.4	225	109.3	163.9	218.5
		76	THC	—	366.4	366.4	—	349.4	349.4	—	330.6	330.6	—	—	—	—	—	—
			SHC	—	139	191.8	—	134.0	187.3	—	128.4	182.3	—	—	—	—	—	—

LEGEND

db — dry bulb
EA — Entering Air (°F)
SHC — Sensible Heat Capacity (1000 Btuh) gross
THC — Total Capacity (1000 Btuh) gross
wb — wet bulb

Performance data (cont)

CAS303/FAS300 Stage 2 Combination Ratings — 60 Hz

CAS303/FAS300				AMBIENT TEMPERATURE (°F)														
				85			95			105			115			125		
				EA (db)			EA (db)			EA (db)			EA (db)			EA (db)		
				75	80	85	75	80	85	75	80	85	75	80	85	75	80	85
7,500 cfm	EA (wb)	58	THC	212.8	212.8	233.6	202.5	202.5	226.1	193.5	193.5	213.4	181.0	181.0	204.5	169.2	169.2	191.2
			SHC	180.7	207.2	233.6	174.4	200.2	226.1	165.3	189.3	213.4	157.5	181.0	204.5	147.3	169.2	191.2
		62	THC	224.6	224.6	224.6	211.7	211.7	212.5	199.3	199.3	205.9	187.0	187.0	194.9	173.0	173.0	185.7
			SHC	163.9	192.8	221.7	156.0	184.2	212.5	149.7	177.8	205.9	141.2	168.0	194.9	133.3	159.5	185.7
		67	THC	246.8	246.8	246.8	233.3	233.3	233.3	219.0	219.0	219.0	203.6	203.6	203.6	187.5	187.5	187.5
			SHC	135.4	164.2	192.9	129.8	158.7	187.5	124.0	153.0	182.0	117.8	146.8	175.9	111.4	140.5	169.6
		72	THC	270.1	270.1	270.1	255.9	255.9	255.9	240.8	240.8	240.8	224.0	224.0	224.0	206.4	206.4	206.4
			SHC	106.1	133.7	161.2	100.6	128.6	156.6	94.8	123.1	151.5	88.6	117.2	145.8	82.2	111.0	139.7
		76	THC	—	290.6	290.6	—	275.3	275.3	—	259.3	259.3	—	242.1	242.1	—	222.8	222.8
			SHC	—	109.1	143.4	—	104	132.7	—	98.3	127.7	—	93.1	122.9	—	87.2	114.7
8,750 cfm	EA (wb)	58	THC	226.1	226.1	251.9	214.8	214.8	242.7	203.7	203.7	230.1	191.8	191.8	216.7	178.6	178.6	201.8
			SHC	194.7	223.3	251.9	186.9	214.8	242.7	177.2	203.7	230.1	166.9	191.8	216.7	155.5	178.6	201.8
		62	THC	232.8	232.8	239.5	220.4	220.4	233.3	208.2	208.2	223.3	194.5	194.5	213.4	179.7	179.7	203.2
			SHC	174.1	206.8	239.5	168.2	200.8	233.3	160.3	191.8	223.3	152.0	182.7	213.4	143.8	173.5	203.2
		67	THC	254.7	254.7	254.7	240.7	240.7	240.7	225.7	225.7	225.7	209.8	209.8	209.8	192.6	192.6	192.6
			SHC	144.1	178.1	212	138.5	172.5	206.6	132.6	166.6	200.7	126.4	160.5	194.5	119.3	153.2	187.1
		72	THC	278.9	278.9	278.9	263.4	263.4	263.4	247.3	247.3	247.3	230.1	230.1	230.1	211.9	211.9	211.9
			SHC	109.3	142.5	175.6	103.6	137.0	170.4	97.7	131.4	165.0	91.6	125.4	159.2	85.3	119.1	152.9
		76	THC	—	299.1	299.1	—	283.7	283.7	—	266.5	266.5	—	248	248	—	228.1	228.1
			SHC	—	112.4	146.7	—	108.2	143.1	—	102.9	134.4	—	97.2	129.9	—	91.0	124.4
10,000 cfm	EA (wb)	58	THC	235.6	235.6	266.2	224.8	224.8	254	213.1	213.1	240.7	200.3	200.3	226.4	186.5	186.5	210.7
			SHC	205.0	235.6	266.2	195.6	224.8	254	185.4	213.1	240.7	174.3	200.3	226.4	162.3	186.5	210.7
		62	THC	241.0	241.0	256.2	228.1	228.1	250.6	214.6	214.6	241.7	200.9	200.9	232.0	186.7	186.7	218.8
			SHC	184.2	220.2	256.2	178.6	214.6	250.6	171.3	206.5	241.7	163.8	197.9	232.0	154.4	186.6	218.8
		67	THC	260.8	260.8	260.8	246.6	246.6	246.6	230.9	230.9	230.9	213.7	213.7	213.7	196.3	196.3	202.2
			SHC	152.3	191.2	230.1	146.7	185.7	224.6	140.8	179.7	218.7	133.7	172.5	211.3	126.0	164.1	202.2
		72	THC	284.5	284.5	284.5	269.1	269.1	269.1	252.3	252.3	252.3	234.9	234.9	234.9	215.6	215.6	215.6
			SHC	111.8	150.1	188.5	106.3	144.8	183.3	100.4	139.1	177.7	94.4	133.1	171.8	87.8	126.6	165.4
		76	THC	—	305.1	305.1	—	289.3	289.3	—	271.6	271.6	—	252.4	252.4	—	232.0	232.0
			SHC	—	116.6	151.8	—	111.9	148.7	—	106.5	144.1	—	100.6	138.8	—	94.3	132.8
11,250 cfm	EA (wb)	58	THC	244.4	244.4	276.1	232.9	232.9	263.1	220.4	220.4	249.0	207.0	207.0	233.9	192.5	192.5	217.5
			SHC	212.6	244.4	276.1	202.6	232.9	263.1	191.8	220.4	249.0	180.1	207.0	233.9	167.5	192.5	217.5
		62	THC	246.6	246.6	277.7	234.0	234.0	269.3	221.1	221.1	256.6	207.2	207.2	241.9	192.6	192.6	225.9
			SHC	197.0	237.3	277.7	190.3	229.8	269.3	181.4	219.0	256.6	170.8	206.3	241.9	159.3	192.6	225.9
		67	THC	265.5	265.5	265.5	250.5	250.5	250.5	234.2	234.2	234.9	217.5	217.5	226.4	200.1	200.1	213.8
			SHC	160.0	203.7	247.4	154.4	198.1	241.8	147.8	191.4	234.9	140.4	183.4	226.4	131.0	172.4	213.8
		72	THC	289.3	289.3	289.3	273.3	273.3	273.3	256.2	256.2	256.2	238.2	238.2	238.2	218.6	218.6	218.6
			SHC	114.1	157.4	200.6	108.6	152.0	195.3	102.8	146.2	189.7	96.8	140.2	183.7	90.3	133.7	177.1
		76	THC	—	310.5	310.5	—	293.3	293.3	—	274.9	274.9	—	255.3	255.3	—	234.9	234.9
			SHC	—	120.2	161.7	—	114.9	157.2	—	109.3	152.1	—	103.4	146.5	—	97.1	140.4
12,500 cfm	EA (wb)	58	THC	251.7	251.7	284.4	239.7	239.7	270.9	226.8	226.8	256.3	21.03	213.0	240.7	197.8	197.8	223.5
			SHC	219	251.7	284.4	208.6	239.7	270.9	197.4	226.8	256.3	185.4	213.0	240.7	172.1	197.8	223.5
		62	THC	253.3	253.3	289.5	240.9	240.9	278.7	228.3	228.3	260.4	213.1	213.1	249.9	197.7	197.7	231.8
			SHC	205.5	247.5	289.5	197.2	237.9	278.7	184.9	222.6	260.4	176.3	213.1	249.9	163.5	197.7	231.8
		67	THC	269.7	269.7	269.7	253.6	253.6	257.4	237.5	237.5	249.7	220.4	220.4	237.9	203.6	203.6	224.0
			SHC	167.6	216.0	264.3	161.2	209.3	257.4	154.3	202.0	249.7	145.3	191.6	237.9	135.7	179.9	224.0
		72	THC	293.0	293.0	293.0	276.8	276.8	276.8	259.2	259.2	259.2	241.3	241.3	241.3	220.8	220.8	220.8
			SHC	116.2	164.1	212.1	110.7	158.8	206.8	105.0	153.0	201.1	99.0	147.0	195.1	92.4	140.3	188.2
		76	THC	—	313.8	313.8	—	296.8	296.8	—	278.4	278.4	—	258.4	258.4	—	237.3	237.3
			SHC	—	122.7	169.5	—	117.6	164.9	—	112.0	159.7	—	106	153.9	—	99.5	147.4

LEGEND

db — dry bulb
EA — Entering Air (°F)
SHC — Sensible Heat Capacity (1000 Btuh) gross
THC — Total Capacity (1000 Btuh) gross
wb — wet bulb

Performance data (cont)

CAS303/FAS300 Stage 1 Combination Ratings — 60 Hz

CAS303/FAS300				AMBIENT TEMPERATURE (°F)														
				85			95			105			115			125		
				EA (db)			EA (db)			EA (db)			EA (db)			EA (db)		
				75	80	85	75	80	85	75	80	85	75	80	85	75	80	85
7500 cfm	EA (wb)	58	THC	91.8	91.8	106	92.3	92.3	107.0	90.8	90.8	109.9	92.4	92.4	105.4	90.7	90.7	110.1
			SHC	70.1	88.0	106	70.6	88.8	107.0	71.3	90.6	109.9	70.0	87.7	105.4	71.3	90.7	110.1
		62	THC	91.0	91.0	101.0	91.0	91.0	100.9	91.0	91.0	101.1	91.0	91.0	100.9	91.0	91.0	101.0
			SHC	54.7	77.9	101.0	54.7	77.8	100.9	54.7	77.9	101.1	54.7	77.8	100.9	54.7	77.9	101.0
		67	THC	99.7	99.7	99.7	99.7	99.7	99.7	99.7	99.7	99.7	99.7	99.7	99.7	99.8	99.8	99.8
			SHC	42.2	64.9	87.5	42.2	64.9	87.5	42.3	64.9	87.6	42.3	65.0	87.7	42.3	65.0	87.7
		72	THC	109.2	109.2	109.2	109.2	109.2	109.2	109.2	109.2	109.2	109.2	109.2	109.2	109.2	109.2	109.2
			SHC	31.2	52.0	72.7	31.2	52.0	72.7	31.2	51.9	72.6	31.2	52.0	72.7	31.2	52.0	72.7
		76	THC	—	117.3	117.3	—	117.3	117.3	—	117.3	117.3	—	117.3	117.3	—	117.3	117.3
			SHC	—	41.7	76.1	—	41.7	76.1	—	41.7	76.1	—	41.7	76.1	—	41.7	76.1
8,750 cfm	EA (wb)	58	THC	96.3	96.3	116.2	96.3	96.3	116.2	96.3	96.3	116.2	96.3	96.3	116.2	96.3	96.3	116.2
			SHC	76.5	96.3	116.2	76.5	96.3	116.2	76.4	96.3	116.2	76.4	96.3	116.2	76.5	96.3	116.2
		62	THC	95.6	95.6	115.2	95.5	95.5	115.2	95.5	95.5	115.3	95.6	95.6	115.2	95.6	95.6	115.2
			SHC	63.0	89.1	115.2	63.0	89.1	115.2	63.0	89.1	115.3	62.9	89.1	115.2	63.0	89.1	115.2
		67	THC	103.1	103.1	103.1	103.1	103.1	103.1	103.1	103.1	103.1	103.1	103.1	103.1	103.1	103.1	103.1
			SHC	44.5	71.0	97.5	44.6	71	97.5	44.6	71.1	97.6	44.5	71.1	97.7	44.6	71.1	97.6
		72	THC	112.7	112.7	112.7	112.7	112.7	112.7	112.7	112.7	112.7	112.7	112.7	112.7	112.7	112.7	112.7
			SHC	30.1	55.7	81.3	30.1	55.7	81.3	30.1	55.7	81.3	30.1	55.7	81.3	30.1	55.7	81.3
		76	THC	—	120.7	120.7	—	120.7	120.7	—	120.7	120.7	—	120.7	120.7	—	120.7	120.7
			SHC	—	42.5	83.8	—	42.5	83.8	—	42.5	83.8	—	42.5	83.8	—	42.5	83.8
10,000 cfm	EA (wb)	58	THC	100.5	100.5	120.6	100.5	100.5	120.7	100.4	100.4	120.6	100.4	100.4	120.6	100.4	100.4	120.6
			SHC	80.3	100.5	120.6	80.3	100.5	120.7	80.3	100.4	120.6	80.3	100.4	120.6	80.3	100.4	120.6
		62	THC	100.7	100.7	126.7	101.9	101.9	120.2	101.2	101.2	122.8	102.8	102.8	122.3	101.1	101.1	123.9
			SHC	73.5	100.1	126.7	71.3	95.8	120.2	72.2	97.5	122.8	72.3	97.3	122.3	72.5	98.2	123.9
		67	THC	105.8	105.8	107.2	105.8	105.8	107.2	105.8	105.8	107.2	105.8	105.8	107.2	105.9	105.9	107.2
			SHC	47.3	77.3	107.2	47.2	77.2	107.2	47.3	77.2	107.2	47.2	77.2	107.2	47.3	77.2	107.2
		72	THC	115.2	115.2	115.2	115.4	115.4	115.4	115.2	115.2	115.2	115.2	115.2	115.2	115.2	115.2	115.2
			SHC	29.7	59.2	88.6	29.7	59.2	88.6	29.7	59.2	88.6	29.7	59.2	88.6	29.7	59.1	88.6
		76	THC	—	122.9	122.9	—	123.0	123.0	—	122.9	122.9	—	122.9	122.9	—	123.0	123.0
			SHC	—	43.9	69.4	—	43.9	69.3	—	43.9	69.4	—	43.9	69.4	—	43.9	69.3
11,250 cfm	EA (wb)	58	THC	103.7	103.7	124.0	103.8	103.8	124.2	103.8	103.8	124.1	103.7	103.7	124.1	103.7	103.7	124.1
			SHC	83.4	103.7	124.0	83.5	103.8	124.2	83.4	103.8	124.1	83.4	103.7	124.1	83.4	103.7	124.1
		62	THC	106.0	106.0	122.6	103.8	103.8	130.8	103.8	103.8	130.9	103.8	103.8	130.9	103.8	103.8	130.9
			SHC	74.0	98.3	122.6	76.7	103.8	130.8	76.8	103.8	130.9	76.8	103.8	130.9	76.8	103.8	130.9
		67	THC	107.8	107.8	114.6	107.8	107.8	115	107.9	107.9	116.6	107.8	107.8	116.3	107.9	107.9	116.5
			SHC	50.1	82.4	114.6	50.2	82.6	115	50.6	83.6	116.6	50.5	83.4	116.3	50.6	83.5	116.5
		72	THC	117.3	117.3	117.3	117.3	117.3	117.3	117.3	117.3	117.3	117.3	117.3	117.3	117.3	117.3	117.3
			SHC	29.3	62.2	95.0	29.3	62.2	95.0	29.3	62.2	95.0	29.3	62.2	95.0	29.3	62.2	95.0
		76	THC	—	124.9	124.9	—	125.0	125.0	—	124.9	124.9	—	124.9	124.9	—	124.9	124.9
			SHC	—	44.6	75.7	—	44.6	75.5	—	44.6	75.7	—	44.6	75.7	—	44.6	75.7
12,500 cfm	EA (wb)	58	THC	106.5	106.5	126.9	106.5	106.5	126.9	106.6	106.6	127.1	106.6	106.6	127.1	106.5	106.5	127.0
			SHC	86.0	106.5	126.9	86.0	106.5	126.9	86.1	106.6	127.1	86.1	106.6	127.1	86.1	106.5	127.0
		62	THC	107.8	107.8	125.6	106.7	106.7	133.9	106.5	106.5	133.8	106.7	106.7	133.9	106.6	106.6	133.8
			SHC	76.2	100.9	125.6	79.4	106.7	133.9	79.3	106.5	133.8	79.4	106.7	133.9	79.3	106.6	133.8
		67	THC	109.7	109.7	125.6	109.7	109.7	125.7	109.7	109.7	125.7	109.7	109.7	125.8	109.7	109.7	125.6
			SHC	53.9	89.7	125.6	54.0	89.8	125.7	54.0	89.8	125.7	54.0	89.9	125.8	54.0	89.8	125.6
		72	THC	118.8	118.8	118.8	118.8	118.8	118.8	118.8	118.8	118.8	118.8	118.8	118.8	118.8	118.8	118.8
			SHC	28.8	64.8	100.8	28.8	64.8	100.8	28.8	64.8	100.8	28.8	64.8	100.8	28.8	64.8	100.8
		76	THC	—	126.5	126.5	—	126.6	126.6	—	127.4	127.4	—	126.6	126.6	—	126.5	126.5
			SHC	—	44.7	80.0	—	44.7	80.0	—	45	80.2	—	44.7	80.0	—	44.7	80.0

LEGEND

db — dry bulb
EA — Entering Air (°F)
SHC — Sensible Heat Capacity (1000 Btuh) gross
THC — Total Capacity (1000 Btuh) gross
wb — wet bulb

Electrical data

CAS072/091/121/151 Without Powered Convenience Outlet

UNIT SIZE	NUMBER OF STAGES	V-Ph-Hz	VOLTAGE RANGE		COMPRESSOR NO. 1		COMPRESSOR NO. 2		OFM		POWER SUPPLY		DISCONNECT SIZE	
			Min	Max	RLA	LRA	RLA	LRA	Qty	FLA (ea)	MCA	Fuse or HACR Breaker	FLA	LRA
072	2	208/230-3-60	187	253	17.5	136	—	—	2	1.5	25/25	30/30	24/24	142/142
		460-3-60	414	506	8.4	66	—	—	2	0.8	13	20	12	70
		575-3-60	518	633	6.3	55	—	—	2	0.7	10	15	9	59
091	2	208/230-3-60	187	253	26.8	164	—	—	2	1.5	37/37	60/60	34/34	170/170
		460-3-60	414	506	12.6	100	—	—	2	0.8	18	25	16	104
		575-3-60	518	633	9.9	78	—	—	2	0.7	14	20	13	82
121	2	208/230-3-60	187	253	33.2	240	—	—	2	1.5	45/45	60/60	42/42	246/246
		460-3-60	414	506	15.1	130	—	—	2	0.8	21	30	19	134
		575-3-60	518	633	11.4	94	—	—	2	0.7	16	25	15	98
151	2	208/230-3-60	187	253	19.6	136	19.6	136	2	1.5	48/48	60/60	49/49	278/278
		460-3-60	414	506	8.2	66	8.2	66	2	0.8	21	25	21	136
		575-3-60	518	633	6.6	55	6.6	55	2	0.7	17	30	17	114

CAS072/091/121/151 With Powered Convenience Outlet

UNIT SIZE	NUMBER OF STAGES	V-Ph-Hz	VOLTAGE RANGE		COMPRESSOR NO. 1		COMPRESSOR NO. 2		OFM		POWER SUPPLY		DISCONNECT SIZE	
			Min	Max	RLA	LRA	RLA	LRA	Qty	FLA (ea)	MCA	Fuse or HACR Breaker	FLA	LRA
072	2	208/230-3-60	187	253	17.5	136	—	—	2	1.5	30/30	45/45	29/29	147/147
		460-3-60	414	506	8.4	66	—	—	2	0.8	15	20	14	72
		575-3-60	518	633	6.3	55	—	—	2	0.7	11	15	11	61
091	2	208/230-3-60	187	253	26.8	164	—	—	2	1.5	42/42	60/60	40/40	175/175
		460-3-60	414	506	12.6	100	—	—	2	0.8	20	30	19	106
		575-3-60	518	633	9.9	78	—	—	2	0.7	16	25	15	84
121	2	208/230-3-60	187	253	33.2	240	—	—	2	1.5	50/50	60/60	47/47	251/251
		460-3-60	414	506	15.1	130	—	—	2	0.8	23	30	22	136
		575-3-60	518	633	11.4	94	—	—	2	0.7	18	25	17	100
151	2	208/230-3-60	187	253	19.6	136	19.6	136	2	1.5	52/52	60/60	54/54	283/283
		460-3-60	414	506	8.2	66	8.2	66	2	0.8	23	30	23	138
		575-3-60	518	633	6.6	55	6.6	55	2	0.7	18	20	19	116

LEGEND

FLA — Full Load Amps
LRA — Locked Rotor Amps
OFM — Outdoor Fan Motor

Electrical data (cont)

CAS181/241 Without Powered Convenience Outlet

UNIT SIZE	NUMBER OF STAGES	NOMINAL POWER SUPPLY	VOLTAGE RANGE		COMPRESSOR No. 1		COMPRESSOR No. 2		OFM		POWER SUPPLY		DISCONNECT SIZE	
		V-Ph-Hz	Min	Max	RLA	LRA	RLA	LRA	Qty	FLA (ea)	MCA	Fuse or HACR Brkr	FLA	LRA
181	2	208/230-3-60	187	253	25.0	164	25.0	164	3	1.5	60.8/60.8	80/80	63/63	337/337
	2	460-3-60	414	506	12.2	100	12.2	100	3	0.8	29.9	40	31	206
	2	575-3-60	518	633	9.0	78	9.0	78	3	0.7	22.4	30	23	162
241	2	208/230-3-60	187	253	30.1	225	30.1	225	4	1.5	73.7/73.7	100/100	76/76	462/462
	2	460-3-60	414	506	16.7	114	16.7	114	4	0.8	40.8	50	42	236
	2	575-3-60	518	633	12.2	80	12.2	80	4	0.7	30.3	40	31	168

CAS181/241 With Powered Convenience Outlet

UNIT SIZE	NUMBER OF STAGES	NOMINAL POWER SUPPLY	VOLTAGE RANGE		COMPRESSOR No. 1		COMPRESSOR No. 2		OFM		POWER SUPPLY		DISCONNECT SIZE	
		V-Ph-Hz	Min	Max	RLA	LRA	RLA	LRA	Qty	FLA (ea)	MCA	Fuse or HACR Brkr	FLA	LRA
181	2	208/230-3-60	187	253	25.0	164	25.0	164	3	1.5	65.6/65.6	90/90	68/68	342/342
	2	460-3-60	414	506	12.2	100	12.2	100	3	0.8	32.1	40	33	208
	2	575-3-60	518	633	9.0	78	9.0	78	3	0.7	24.1	30	25	164
241	2	208/230-3-60	187	253	30.1	225	30.1	225	4	1.5	78.5/78.5	100/100	82/82	467/467
	2	460-3-60	414	506	16.7	114	16.7	114	4	0.8	43	50	45	238
	2	575-3-60	518	633	12.2	80	12.2	80	4	0.7	32	40	33	170

CAS123/153 Without Powered Convenience Outlet

UNIT SIZE	NUMBER OF STAGES	NOMINAL POWER SUPPLY	VOLTAGE RANGE		COMPRESSOR No. 1		COMPRESSOR No. 2		OFM		POWER SUPPLY		DISCONNECT SIZE	
		V-Ph-Hz	Min	Max	RLA	LRA	RLA	LRA	Qty	FLA (ea)	MCA	Fuse or HACR Brkr	FLA	LRA
123	3	208/230-3-60	187	253	16.4	110	15.6	110	2	1.5	40/40	50/50	40/40	226/226
	3	460-3-60	414	506	6.8	55	7.7	52	2	0.8	18	25	19	111
	3	575-3-60	518	633	6.4	48	5.8	39	2	0.7	16	20	16	91
153	3	208/230-3-60	187	253	17.5	136	19.6	136	2	1.5	45/45	60/60	46/46	278/278
	3	460-3-60	414	506	8.4	66	8.2	66	2	0.8	21	25	21	136
	3	575-3-60	518	633	6.6	55	6.6	55	2	0.7	17	20	17	114

CAS123/153 With Powered Convenience Outlet

UNIT SIZE	NUMBER OF STAGES	NOMINAL POWER SUPPLY	VOLTAGE RANGE		COMPRESSOR No. 1		COMPRESSOR No. 2		OFM		POWER SUPPLY		DISCONNECT SIZE	
		V-Ph-Hz	Min	Max	RLA	LRA	RLA	LRA	Qty	FLA (ea)	MCA	Fuse or HACR Brkr	FLA	LRA
123	3	208/230-3-60	187	253	16.4	110	15.6	110	2	1.5	44/44	60/60	46/46	231/231
	3	460-3-60	414	506	6.8	55	7.7	52	2	0.8	21	25	21	113
	3	575-3-60	518	633	6.4	48	5.8	39	2	0.7	17	20	18	93
153	3	208/230-3-60	187	253	17.5	136	19.6	136	2	1.5	50/50	60/60	52/52	283/283
	3	460-3-60	414	506	8.4	66	8.2	66	2	0.8	23	30	23	138
	3	575-3-60	518	633	6.6	55	6.6	55	2	0.7	18	20	19	116

LEGEND

HACR — Heating, Air Conditioning and Refrigeration
FLA — Full Load Amps
LRA — Locked Rotor Amps
MCA — Minimum Circuit Amps
OFM — Outdoor Fan Motor
RLA — Rated Load Amps

Electrical data (cont)

CAS183/243/303 Without Powered Convenience Outlet

UNIT SIZE	NUMBER OF STAGES	NOMINAL POWER SUPPLY	VOLTAGE RANGE		COMPRESSOR No. 1		COMPRESSOR No. 2		OFM		POWER SUPPLY		DISCONNECT SIZE	
		V-Ph-Hz	Min	Max	RLA	LRA	RLA	LRA	Qty	FLA (ea)	MCA	Fuse or HACR Brkr	FLA	LRA
183	3	208/230-3-60	187	253	26.8	164	25.0	164	3	1.5	63/63	80/80	65/65	337/337
	3	460-3-60	414	506	12.0	94	12.2	100	3	0.8	29.7	40	31	200
	3	575-3-60	518	633	9.0	65	9.9	78	3	0.7	23.5	30	24	149
243	3	208/230-3-60	187	253	32.5	240	28.2	240	4	1.5	74.8/74.8	100/100	77/77	492/492
	3	460-3-60	414	506	14.8	130	14.7	130	4	0.8	36.4	50	38	268
	3	575-3-60	518	633	11.1	94	11.3	94	4	0.7	28	35	29	196
303	3	208/230-3-60	187	253	35.3	240	48.4	245	4	1.5	101.8/101.8	150/150	103/103	497/497
	3	460-3-60	414	506	17.0	140	19.0	125	4	0.8	44	60	45	273
	3	575-3-60	518	633	13.0	108	16.0	100	4	0.7	35.8	50	37	216

CAS183/243/303 With Powered Convenience Outlet

UNIT SIZE	NUMBER OF STAGES	NOMINAL POWER SUPPLY	VOLTAGE RANGE		COMPRESSOR No. 1		COMPRESSOR No. 2		OFM		POWER SUPPLY		DISCONNECT SIZE	
		V-Ph-Hz	Min	Max	RLA	LRA	RLA	LRA	Qty	FLA (ea)	MCA	Fuse or HACR Brkr	FLA	LRA
183	3	208/230-3-60	187	253	26.8	164	25.0	164	3	1.5	67.8/67.8	90/90	70/70	342/342
	3	460-3-60	414	506	12.0	94	12.2	100	3	0.8	31.9	40	33	202
	3	575-3-60	518	633	9.0	65	9.9	78	3	0.7	25.2	30	26	151
243	3	208/230-3-60	187	253	32.5	240	28.2	240	4	1.5	79.6/79.6	100/100	82/82	497/497
	3	460-3-60	414	506	14.8	130	14.7	130	4	0.8	38.6	50	40	270
	3	575-3-60	518	633	11.1	94	11.3	94	4	0.7	29.7	40	31	198
303	3	208/230-3-60	187	253	35.3	240	48.4	245	4	1.5	106.6/106.6	150/150	109/109	502/502
	3	460-3-60	414	506	17.0	140	19.0	125	4	0.8	46.2	60	48	275
	3	575-3-60	518	633	13.0	108	16.0	100	4	0.7	37.5	50	39	218

LEGEND

HACR — Heating, Air Conditioning and Refrigeration
FLA — Full Load Amps
LRA — Locked Rotor Amps
MCA — Minimum Circuit Amps
OFM — Outdoor Fan Motor
RLA — Rated Load Amps

Application data

Operating Limits

Maximum outdoor temperature .....125°F

Minimum return-air temperature (FAS/FAX) .....55°F

Maximum return-air temperature (FAS/FAX) .....95°F

Range of acceptable saturation suction temperature .....20 to 50°F

Maximum discharge temperature .....275°F

Minimum discharge superheat .....60°F

1. Select air handler at no less than 300 cfm/ton (nominal condensing unit capacity).
2. Total combined draw of the field-supplied liquid line solenoid valve and air handler fan contactor must not exceed 22 va. If the specified va must be exceeded, use a remote relay to control the load.

Minimum Outdoor-Air Operating Temperature

UNIT CAS	MAXIMUM OUTDOOR TEMP (°F)	
	Std	With Low Ambient Control[a]
072	35	–20
091	35	
123	35	
153	35	
183	35	
243	35	
303	35	

NOTE(S):
a. Wind baffles (field-supplied and field-installed) are recommended for all units with low ambientl control. Refer to Low Ambient Temperature Control Installation Instructions for additional information.

Refrigerant Piping

IMPORTANT: Do not bury refrigerant piping underground.

It is recommended that the refrigerant piping for all commercial split systems include a liquid line solenoid valve, a liquid line filter drier and a sight glass.

For refrigerant lines longer than 75 lineal ft, a liquid line solenoid valve installed at the indoor unit and a suction accumulator are required. Refer to the Refrigerant Specialties Part Numbers table.

Refrigerant Specialties Part Numbers

LIQUID LINE SIZE (in.)	LIQUID LINE SOLENOID VALVE (LLSV)	LLSV COIL	SIGHT GLASS
3/8	1179871	1179874	1179879
1/2	1179872	1179874	1179877
5/8	1179873	1179874	1179878

Guide specifications

Commercial Air-Cooled Condensing Units HVAC Guide Specifications

Size Range: **6 to 25 Tons**

Models: **CAS, Single Circuit (072/091/121/151/181/241 sizes) and Dual Circuit (123/153/183/243/303 sizes)**

Part 1 — GENERAL

1.01 SYSTEM DESCRIPTION

Outdoor-mounted, air-cooled condensing unit suitable for on-the-ground or rooftop installation. Unit shall consist of a hermetic scroll air-conditioning compressor(s) assembly, an air-cooled coil, propeller-type condenser fans, and a control box. Unit shall discharge supply air upward as shown on contract drawings. Unit shall be used in a refrigeration circuit matched with a packaged air-handling unit.

1.02 QUALITY ASSURANCE

A. Unit shall be rated in accordance with AHRI Standard 340/360.

B. Unit construction shall comply with ANSI/ASHRAE 15 safety code latest revision and comply with NEC.

C. Unit shall be constructed in accordance with UL 1995 standard and shall carry the UL and UL, Canada label.

D. Unit cabinet shall be capable of withstanding 500-hour salt spray exposure per ASTM B117 (scribed specimen).

E. Air-cooled condenser coils for hermetic scroll compressor units shall be leak tested at 150 psig, and pressure tested at 650 psig.

F. Unit shall be manufactured in a facility registered to ISO 9001:2015 manufacturing quality standard.

1.03 DELIVERY, STORAGE, AND HANDLING

Unit shall be shipped as single package only, and shall be stored and handled according to unit manufacturer's recommendations.

1.04 WARRANTY (FOR INCLUSION BY SPECIFYING ENGINEER.)

Part 2 — PRODUCTS

2.01 EQUIPMENT

A. General:

Factory-assembled, single piece, air-cooled condensing unit. Contained within the unit enclosure shall be all factory wiring, piping, controls, compressor, holding charge, and special features required prior to field start-up.

B. Unit Cabinet:

1. Unit cabinet shall be constructed of galvanized steel, bonderized and coated with a prepainted baked enamel finish.
2. A heavy-gauge roll-formed perimeter base rail with forklift slots and lifting holes shall be provided to facilitate rigging.

C. Condenser Fans:

1. Condenser fans shall be direct driven, propeller type, discharging air vertically upward.
2. Fan blades shall be balanced.
3. Condenser fan discharge openings shall be equipped with PVC-coated steel wire safety guards.
4. Condenser fan and motor shaft shall be corrosion resistant.

D. Compressor:

1. Compressor shall be of the hermetic scroll type.
2. Compressor shall be mounted on rubber grommets.
3. Compressors shall include overload protection.
4. Compressors shall be equipped with a crankcase heater.
5. Compressor shall be equipped with internal high pressure and high temperature protection.

E. Condenser Coils:

1. Standard Aluminum fin - Copper Tube Coils:
   a. Standard evaporator and condenser coils shall have aluminum lanced plate fins mechanically bonded to seamless internally grooved copper tubes with all joints brazed.
   b. Evaporator coils shall be leak tested to 150 psig, pressure tested to 450 psig, and qualified to UL 1995 burst test at 1775 psig.
   c. Condenser coils shall be leak tested to 150 psig, pressure tested to 650 psig, and qualified to UL 1995 burst test at 1980 psig.
2. Optional copper-fin evaporator and condenser coils:
   a. Shall be constructed of copper fins mechanically bonded to copper tubes and copper tube sheets.
   b. Galvanized steel tube sheets shall not be acceptable.
   c. A polymer strip shall prevent coil assembly from contacting the sheet metal coil pan to minimize potential for galvanic corrosion between coil and pan.
3. Optional e-coated aluminum-fin evaporator and condenser coils:
   a. Shall have a flexible epoxy polymer coating uniformly applied to all coil surface areas without material bridging between fins.
   b. Coating process shall ensure complete coil encapsulation of tubes, fins and headers.
   c. Color shall be high gloss black with gloss per ASTM D523-89.
   d. Uniform dry film thickness from 0.8 to 1.2 mil on all surface areas including fin edges.
   e. Superior hardness characteristics of 2H per ASTM D3363-92A and cross-hatch adhesion of 4B-5B per ASTM D3359-93.

f. Impact resistance shall be up to 160 in.-lb (ASTM D2794-93).

g. Humidity and water immersion resistance shall be up to minimum 1000 and 250 hours respectively (ASTM D2247-92 and ASTM D870-92).

h. Corrosion durability shall be confirmed through testing to be no less than 1000 hours salt spray per ASTM B117-90.

4. Optional e-coated aluminum-fin, aluminum tube condenser coils:

a. Shall have a flexible epoxy polymer coating uniformly applied to all coil external surface areas without material bridging between fins or louvers.

b. Coating process shall ensure complete coil encapsulation, including all exposed fin edges.

c. E-coat thickness of 0.8 to 1.2 mil with top coat having a uniform dry film thickness from 1.0 to 2.0 mil on all external coil surface areas, including fin edges, shall be provided.

d. Shall have superior hardness characteristics of 2H per ASTM D3363-00 and cross-hatch adhesion of 4B-5B per ASTM D3359-02.

e. Shall have superior impact resistance with no cracking, chipping or peeling per NSF/ANSI 51-2002 Method 10.2.

F. Refrigeration Components:

Refrigeration circuit components shall include liquid line service valve, suction line service valve, a full charge of compressor oil, and a partial holding charge of refrigerant.

G. Controls and Safeties:

1. Minimum control functions shall include:

a. Control wire terminal blocks.

b. Compressor lockout on auto-reset safety until reset from thermostat.

c. Each unit shall utilize the Comfort Alert™ Diagnostic Board that provides:

1) System Pressure Trip fault code indication
2) Short Cycling fault code indication
3) Locked Rotor fault code indication
4) Open Circuit fault code indication
5) Reverse Phase 3 fault code indication
6) Welded Contactor fault code indication
7) Low Voltage fault code indication
8) Anti-short cycle protection
9) Phase reversal protection

d. Minimum safety devices which are equipped with automatic reset (after resetting first at thermostat), shall include:

1) High discharge pressure cutout.
2) Low pressure cutout.

H. Operating Characteristics:

1. The capacity of the condensing unit shall meet or exceed _____ Btuh at a suction temperature of _____ °F/C. The power consumption at full load shall not exceed _____ kW.

2. The combination of the condensing unit and the evaporator or fan coil unit shall have a total net cooling capacity of _____ Btuh or greater at conditions of _____ cfm entering-air temperature at the evaporator at _____ °F/C wet bulb and _____ °F/C dry bulb, and air entering the condensing unit at _____ °F/C.

3. The system shall have an EER of _____ Btuh/Watt or greater at standard AHRI conditions.

4. Standard unit shall be capable to operate up to 125°F (52°C) and down to 40°F (4°C)

I. Electrical Requirements:

1. Nominal unit electrical characteristics shall be _____ v, 3-ph, _____ Hz. The unit shall be capable of satisfactory operation within voltage limits of _____ v to _____ v.

2. Unit electrical power shall be single-point connection.

3. Unit control circuit shall contain a 24-v transformer for unit control.

J. Special Features:

1. Low-Ambient Temperature Control:

A low-ambient temperature control shall be available as a factory-installed option or as a field-installed accessory. This low-ambient control shall regulate speed of the condenser-fan motors in response to the saturated condensing temperature of the unit. The control shall maintain correct condensing pressure at outdoor temperatures down to –20°F (–29°C).

2. Unit-Mounted, Non-Fused Disconnect Switch:

Switch shall be factory-installed and internally mounted. NEC and UL-approved non-fused switch shall provide unit power shutoff. Switch shall be accessible from outside the unit and shall provide power off lockout capability. Non-fused disconnect cannot be used when unit MOCP electrical rating exceeds 80 amps.

3. Louvered Hail Guard Package:

Louvered hail guard package shall protect coils against damage from hail and other flying debris.

4. Condenser Coil Grille:

Grille shall add decorative appearance to unit and protect condenser coil from large objects and vandalism.

© 2023 Carrier
Lewisburg, Tennessee 37091 USA
www.GoComfortmaker.com

Manufacturer reserves the right to discontinue, or change at any time, specifications or designs without notice and without incurring obligations.