DFG Commercial

Standard Efficiency Gas/Electric Direct-Drive Packaged Rooftop Unit 7.5-12.5 Ton DFG Light Commercial

7.5 - 10 Tons 11.2 EER / 14.8 iEER

12.5 Tons 11 EER / 14.2 IEER

20 YEAR HEAT EXCHANGER LIMITED WARRANTY

5 YEAR PARTS LIMITED WARRANTY

C ETL LISTED US Intertek

AHRI CERTIFIED www.ahridirectory.org Unitary Small AC AHRI Standard 210/240

ISO 9001 QUALITY MANAGEMENT SYSTEM GLOBAL QUALITY STANDARDS

ISO 14001 CERTIFIED ENVIRONMENTAL MANAGEMENT SYSTEM

*Complete warranty details available from your local distributor or manufacturer's representative or at www.daikincomfort.com or www.daikinac.com

Supersedes 06/23

Our Perfect Package:

Harnessing energy-efficient performance, proven technology, and enhanced comfort for life.

Since becoming the first company in Japan to manufacture packaged air conditioning systems, in 1951, Daikin has supported comfortable indoor living based on the strengths and technologies that have led to the growth of the company becoming one of the world's largest manufacturers of HVAC products, systems and refrigerants.

Today, as a comprehensive global manufacturer of HVAC products and systems, the Daikin brand is committed to being recognized as a truly global and excellent company capable of continually creating new value for its customers. The company plans to pursue sustainable growth and foster business operations that consistently harmonize with the goals of improving indoor comfort.

The group philosophy of the company includes:

- Creating new value continuously for customers
- Developing world leading energy-saving technology
- Being a flexible and dynamic organization
- Allowing employees to be the driving force for the success of the company
- Fostering an atmosphere of best practices, boldness, and innovation
- Thinking and acting globally

Contents

2	**Introduction**	2
4	**Nomenclature**	4
5	**Features and Benefits**	5
	Applications	8
	Serviceability	8
9	**Product Specifications**	9
	Coil Dimension	19
	AHRI Ratings	19
	Sound Data	19
20	**Expanding Cooling Data**	20
28	**Heating Data**	28
29	**Air Flow**	29
78	**Static Pressure**	78
79	**Electrical Data**	79
82	**Wiring Diagrams**	82
83	**Dimensional Data**	83
84	**Electrical Connections**	84
	Unit Clearances	84
85	**Installation**	85
	Weights	85

For details on accessories refer to document **PM-LC-ACCESSORIES**

Nomenclature

D	F	G	036	3	S	045	C	A	A	X	X	X	X	X	X	X	X	A	*
1	2	3	4,5,6	7	8	9,10,11	12	13	14	15	16	17	18	19	20	21	22	23	24

Revision Levels
Major & Minor

Brand
D Daikin

Configuration
F Standard Efficiency
R High Efficiency

X No Options

Application
C Cooling
G Gas/Electric
H Heat Pump

PE Connection
X No Options
B Single-point power connection for Power Exhaust

Nominal Cooling Capacity

036	3 Tons	090	7½ Tons	180	15 Tons
048	4 Tons	102	8½ Tons	240	20 Tons
060	5 Tons	120	10 Tons	300	25 Tons
072	6 Tons	150	12½ tons		

IAQ
X No Options

Voltage

1	208-230/1/60	4	460/3/60
3	208-230/3/60	7	575/3/60

Service Options
X No Option
A Powered convenience outlet
B Non-powered convenience outlet
C Hinge Panels
D Hinged Panels and Powered convenience outlet
E Hinged Panels and non-powered convenience outlet

Supply Fan/Drive Type/Motor
D Direct Drive - Standard Static
W Direct Drive - High Static
L Direct Drive -Medium Static

Electrical
X No Options
A Non-Fused Disconnect
B Phase Monitor
C Thru-the-base connections
E Non-Fused Disconnect and Phase Monitor
F Non-Fused Disconnect and Thru-the-base connectons
H Phase Monitor and Thru-the-base connections
L Non-Fused Disconnect, Thru-the-base connectons and Phase Monitor

Nominal Heating Capacity

Gas/Electric		A/C Factory-Installed Electric Heat			
045	45,000 BTU/h	XXX	No Heat	XXX	No Heat
060	60,000 BTU/h	005	5kW	022	20 kW
070	70,000 BTU/h	006	5kW	023	20 kW
080	80,000 BTU/h	010	10 kW	030	30 kW
090	90,000 BTU/h	011	10 kW	031	30 kW
100	100,000 BTU/h	015	15 kW	032	30 kW
115	115,000 BTU/h	016	15 kW	045	45kW
125	125,000 BTU/h	017	15 kW	046	45kW
130	130,000 BTU/h	018	18 kW	060	60kW
140	140,000 BTU/h	020	20 kW	075	75kW
150	150,000 BTU/h	021	20 kW		
180	180,000 BTU/h				
210	210,000 BTU/h				
225	225,000 BTU/h				
240	240,000 BTU/h				
350	350,000 BTU/h				
400	400,000 BTU/h				

See product specifications for heat size(s) available for each capacity.

Economizer
X No Options
A Ultra Low-Leak Downflow Economizer w/ Enthalpy Sensor
B Low-Leak Downflow Economizer w/ Enthalpy Sensor
G Ultra Low-Leak Downflow Economizer w/ Dry Bulb Sensor
H Low-Leak Downflow Economizer w/ Dry Bulb Sensor
L Ultra Low-Leak Downflow Economizer for DDC controls w/ Dry Bulb Sensor
N Low-Leak Downflow Economizer for DDC controls w/ Enthalpy Sensor
P Low-Leak Downflow Economizer for DDC controls w/ Dry Bulb Sensor

Refrigeration Systems
A Single stage cooling modes
C Two stage cooling modes
F Two stage cooling modes with Hot Gas Reheat and Low-ambient control

Coils, Hail guard
X No Options
C Hail Guard

Heat Exchanger
X No options
A Standard Aluminized Exchanger
S Stainless Steel Exchanger
U Ultra Low NoX Stainless Steel Exchanger

Sensors
X No Options
A RA Smoke Detector
B SA Smoke Detector
C RA & SA Smoke Detector

Controls
A Electro-mechanical controls
B DDC w/ BACnet interface

G/E Stocking Models

Model Number	Code String	Model Number	Code String
DFG0903DL00001S	DFG0903D130CAAXXXXXXXXAA	DFG1204DH00001S	DFG1204D240CAAXXXXXXXXAA
DFG0903DM00001S	DFG0903D180CAAXXXXXXXXAA	DFG1207DL00001S	DFG1207D130CAAXXXXXXXXAA
DFG0903DH00001S	DFG0903D225CAAXXXXXXXXAA	DFG1207DM00001S	DFG1207D180CAAXXXXXXXXAA
DFG0904DL00001S	DFG0904D130CAAXXXXXXXXAA	DFG1207DH00001S	DFG1207D240CAAXXXXXXXXAA
DFG0904DM00001S	DFG0904D180CAAXXXXXXXXAA	DFG1503DL00001S	DFG1503D130CAAXXXXXXXXAA
DFG0904DH00001S	DFG0904D225CAAXXXXXXXXAA	DFG1503DM00001S	DFG1503D180CAAXXXXXXXXAA
DFG0907DL00001S	DFG0907D130CAAXXXXXXXXAA	DFG1503DH00001S	DFG1503D240CAAXXXXXXXXAA
DFG0907DM00001S	DFG0907D180CAAXXXXXXXXAA	DFG1504DL00001S	DFG1504D130CAAXXXXXXXXAA
DFG0907DH00001S	DFG0907D225CAAXXXXXXXXAA	DFG1504DM00001S	DFG1504D180CAAXXXXXXXXAA
DFG1023DL00001S	DFG1023D130CAAXXXXXXXXAA	DFG1504DH00001S	DFG1504D240CAAXXXXXXXXAA
DFG1023DM00001S	DFG1023D180CAAXXXXXXXXAA	DFG1507DL00001S	DFG1507D130CAAXXXXXXXXAA
DFG1023DH00001S	DFG1023D225CAAXXXXXXXXAA	DFG1507DM00001S	DFG1507D180CAAXXXXXXXXAA
DFG1024DL00001S	DFG1024D130CAAXXXXXXXXAA	DFG1507DH00001S	DFG1507D240CAAXXXXXXXXAA
DFG1024DM00001S	DFG1024D180CAAXXXXXXXXAA	DFG1503LL00001F	DFG1503D130CAAXXXXXXXXAA
DFG1024DH00001S	DFG1024D225CAAXXXXXXXXAA	DFG1503LM00001F	DFG1503D180CAAXXXXXXXXAA
DFG1027DL00001S	DFG1027D130CAAXXXXXXXXAA	DFG1503LH00001F	DFG1503D240CAAXXXXXXXXAA
DFG1027DM00001S	DFG1027D180CAAXXXXXXXXAA	DFG1504LL00001F	DFG1504D130CAAXXXXXXXXAA
DFG1027DH00001S	DFG1027D225CAAXXXXXXXXAA	DFG1504LM00001F	DFG1504D180CAAXXXXXXXXAA
DFG1203DL00001S	DFG1203D130CAAXXXXXXXXAA	DFG1504LH00001F	DFG1504D240CAAXXXXXXXXAA
DFG1203DM00001S	DFG1203D180CAAXXXXXXXXAA	DFG1507LL00001F	DFG1507D130CAAXXXXXXXXAA
DFG1203DH00001S	DFG1203D240CAAXXXXXXXXAA	DFG1507LM00001F	DFG1507D180CAAXXXXXXXXAA
DFG1204DL00001S	DFG1204D130CAAXXXXXXXXAA	DFG1507LH00001F	DFG1507D240CAAXXXXXXXXAA
DFG1204DM00001S	DFG1204D180CAAXXXXXXXXAA		

Daikin Packaged Rooftop Units (RTUs) are built to perform, with features and options that help provide low installation and operation costs, superior indoor air quality, efficient operation, and longevity.

Installation

Daikin Packaged units are designed with fast and easy installation in mind and are ideal for both new construction and retrofit projects. Our packaged rooftop units are built to be a direct replacement for most rooftop units on the field without the need of a curb adapter, to be able to replace the unit in a shorter time and at a lower cost (compared to the previous design).

Cabinet Construction

Daikin packaged rooftop units are made with high quality galvanized steel with a powder-paint finish to provide higher corrosion resistance.

- Easy accessibility using our tool-less filter access
- The interior surface in the indoor air section is fully insulated to prevent sweating and thermal losses, using our foil face fiberglass insulation which also omits exposed filter fibers into the airstream.
- 1" Raised flanged edges around the supply and return offer easy installation for the duct connections.

- The full perimeter base rail is built using heavy gauge galvanized steel for a stronger structural installation. The base rails are a minimum of 3½" tall and include holes to allow for overhead rigging and lifting with forklifts.
- Electrical lines and gas lines can be brought through the base of the unit or through the horizontal knockout for easy installation and accessibility on the field.

Compressor

High performance, low noise scroll compressors to match the required total load.

- Resiliently factory-mounted on rubber grommets for vibration isolation
- Refrigeration circuits include both low- and high-pressure safety switches.
- Unit is factory charged with environmentally friendly R-410A refrigerant.
- Compressor location outside the condenser section to avoid air bypass.
- Internal overload protection included with compressor.
- Two single-stage scroll compressor for partial load applications.

Supply Fan

Indoor fan motors are direct drive EEM motors as standard to provide easy adjustment for airflow control.

- Slide out forward curb fan for easy maintenance and replacement.
- High-static drive options for application with high airflow/static requirements.
- Each fan assembly is dynamically trim balanced at the factory before shipment for quick start-up and efficient operation.
- Motor with thermal overload failure protection is provided for motor long lasting operation.
- Ball bearing Direct-Drive EEM motor removes the need for belts, sheaves, bearings and lubrication.

Coils

All units use large face area outdoor coils. These coils are constructed with seamless copper tubes, mechanically bonded into aluminum plate-type fins with full drawn collars to completely cover the tubes for high operating efficiencies.

The indoor coil section is installed in a draw through configuration to provide better dehumidification.

» Microchannel heat exchanger technology on all condenser coils for improved performance and reduced refrigerant load.

» All units use large face area outdoor coils.

» Coils are factory pressure tested to ensure pressure and leak integrity.

» Copper tube / aluminum fin coils on evaporator

Controls and Wiring

Packaged rooftop units come equipped with a well-organized, large, easy to use, weatherproof internal control box with easy access, for a better user experience.

» Units are factory-wired with color-coded wires and complete 24-volt Electromechanical controls package.

» Units include single-point power entry as standard.

» Terminal blocks are provided as standard for easy installation and field power wiring.

Filtration

Unit provides a draw-through filter section as standard for better air quality and long lasting component maintenance.

» Filters installed on the units are standard off the shelf sizes for easy replacement.

» Tool-less filter access for easy and fast filter replacement and service.

Heating Section

Wide range of natural gas selections effectively handle most comfort heating demand from morning warm-up control to full heat, all available with Daikin's Wrinkle Bend heat exchanger technology.

Gas Furnace

ETL certified heating modules provide a custom match to specific design requirement.

» Wrinkle Bend Technology available on all Daikin gas heat exchangers. The Wrinkle Bend Technology reduces the manufacturing stress that leads to defects and pinholes in the tubes at the same time as it increases the gas turbulence to amplify the heat transfer.

» All 3-Phase models have a minimum 80% T.E. (Thermal Efficiency)

» User has the flexibility to order heat exchanger tubes with 20 Gauge, G160, aluminized steel or stainless steel to meet your application needs.

» The furnace has a tubular design with in-shot gas burner manifold and is installed downstream of the supply fan.

» The module contains an induced draft fan that will maintain a negative pressure in the heat exchanger tubes for the removal of the flue gases to protect indoor air quality.

» Burner section provides flame roll-out safety protection switches and a high temperature limit switch for reliable operation.

» Induced draft fan includes an airflow safety switch to prevent heating operation in the event of no airflow for occupant safety.

» All burner assemblies are factory tested and adjusted prior to shipment.

» Heating control is fully integrated into the unit's control system for quick start-up and reliable control.

» Optional field installed LP kits are available for staged heating modules as well as high altitude kits.

Electrical

Units are completely wired and tested at the factory to provide faster commissioning and start-up.

» Wiring complies with NEC requirements and all applicable UL standards.

» For ease of use, wiring and electrical components are number coded and labeled according to the electrical diagram.

» A 115 V GFI convenience outlet requiring independent power supply for the receptacle is optional.

» An optional unit powered 20 amp 115 V convenience outlet, complete with factory mounted transformer, disconnect switch, and primary and secondary overload protection, eliminates the need to pull a separate 115 V power source.

» Supply air fan, compressor, and condenser fan motor branch circuits have individual short circuit protection. Unit includes knockouts in the bottom of the main control panels for field wiring entrance.

» A single-point power connection with power block is standard and a terminal board is provided for connecting low voltage control wiring.

» For better serviceability an optional non-fused disconnect switch can be installed inside the control panel and operated by an externally mounted handle to disconnect the electrical power at the unit.

DAIKIN

Applications

Daikin Rooftop units are intended for comfort cooling applications in normal heating, ventilating, and air conditioning. Consult your local Daikin sales representative for applications involving operations at high ambient temperatures, high altitudes, non-cataloged voltages, or for job-specific unit selections that fall outside of the range of the catalog tables.

For proper operation, units should be rigged in accordance with instructions stated on the installation manual. Fire dampers, if required, must be installed in the ductwork according to local and/or state codes. No space is allowed for these dampers in the unit.

Follow factory check, test and start procedures explicitly to achieve satisfactory start-up and operation.

Most rooftop applications take advantage of the significant energy savings provided with economizer operation. When an economizer system is used, mechanical refrigeration is typically not required below an ambient temperature of 50°F.

Serviceability

Daikin packaged rooftop units are built with serviceability in mind, designed to make future maintenance and service on the unit easy and accessible.

- Our packaged rooftop units offer a slide out blower to facilitate the access and removal of the fan.
- Filter panels on the small chassis line offer tool-less access for easy maintenance.
- Independent compressor outside of the air bypass to eliminate component blockage and provide easy access.
- Field connections are color coded to identify point-to-point component connections.
- All 7.5- 12.5 ton units are designed for convertible airflow orientation to serve downflow or horizontal applications. Every unit ships prepared to convert to horizontal orientation in the field if required.
- Easy access to gas valves and control panel.

Model	DFG0903DL00001S	DFG0903DM00001S	DFG0903DH00001S	DFG0904DL00001S	DFG0904DM00001S
COOLING CAPACITY					
Total, BTU/h	86,000	86,000	86,000	86,000	86,000
EER / IEER	11.2/14.8	11.2/14.8	11.2/14.8	11.2/14.8	11.2/14.8
AHRI Reference #	2102402218	2102402218	2102402218	2102402218	2102402218
HEATING CAPACITY					
Heat Range	LOW	MEDIUM	HIGH	LOW	MEDIUM
No. of Burners	5	6	7	5	6
High Stage Input / Output (KBTU/H)	130/105.3	180/145.8	225/182.25	130/105.3	180/145.8
Low Stage Input / Output (KBTU/H)	97.5/79	135/109.4	168.8/136.7	97.5/79	135/109.4
Thermal Efficiency (T.E.)	81%	81%	81%	81%	81%
Annual Fuel Utilization Efficiency (AFUE)	N/A	N/A	N/A	N/A	N/A
High Stage Temperature Rise Range (°F)	25-55	25-55	30-60	25-55	25-55
Low Stage Temperature Rise Range (°F)	25-55	25-55	30-60	25-55	25-55
EVAPORATOR MOTOR / RTPF (ROUND TUBE PLATE FIN)					
Motor Type	Direct Drive	Direct Drive	Direct Drive	Direct Drive	Direct Drive
External Static Pressure (ESP)	Standard	Standard	Standard	Standard	Standard
Wheel Dia. X Width	15x12	15x12	15x12	15x12	15x12
Indoor Nominal CFM	3020	3020	3020	3020	3020
RPM	300-1600	300-1600	300-1600	300-1600	300-1600
Indoor Horsepower	2.4	2.4	2.4	2.4	2.4
Filter Size (in)	20 X 20 X 2 (2) 20 X 25 X 2 (2)	20 X 20 X 2 (2) 20 X 25 X 2 (2)	20 X 20 X 2 (2) 20 X 25 X 2 (2)	20 X 20 X 2 (2) 20 X 25 X 2 (2)	20 X 20 X 2 (2) 20 X 25 X 2 (2)
Drain Size (NPT)	3/4	3/4	3/4	3/4	3/4
R-410A Refrigerant Charge (oz.)	67/65.4	67/65.4	67/65.4	67/65.4	67/65.4
Evaporator Coil Face Area (ft^2)	13.4	13.4	13.4	13.4	13.4
Rows Deep/ Fins per Inch	2 / 16	2 / 16	2 / 16	2 / 16	2 / 16
CONDENSER FAN / MCHX (MICROCHANNEL HEAT EXCHANGER)					
Quantity of Condenser Fan Motors	2	2	2	2	2
RPM (High/Low stage)	1120	1120	1120	1050	1050
Outdoor Horsepower	1/3	1/3	1/3	1/3	1/3
Fan Diameter/ # Fan Blades	22 / 3	22 / 3	22 / 3	22 / 3	22 / 3
Face Area (ft^2)	29.1	29.1	29.1	29.1	29.1
Rows Deep / Fins per Inch	1 / 23	1 / 23	1 / 23	1 / 23	1 / 23
COMPRESSOR					
Quantity / Type / Stages per Compressor	2/ Scroll / 1	2/ Scroll / 1	2/ Scroll / 1	2/ Scroll / 1	2/ Scroll / 1
Compressor RLA / LRA	13.1/83.1	13.1/83.1	13.1/83.1	6.1/41	6.1/41
ELECTRICAL DATA					
Voltage-Phase-Frequency	208/230-3-60	208/230-3-60	208/230-3-60	460-3-60	460-3-60
Indoor Blower FLA	8	8	8	5.4	5.4
Max External Static (In. W.C.)	0.8	0.8	0.8	0.8	0.8
Outdoor Fan FLA	2	2	2	0.85	0.85
Min. Circuit Ampacity[1]	41.6/41.6	41.6/41.6	41.6/41.6	20.8	20.8
Max. Overcurrent Protection (A)[2]	50/50	50/50	50/50	25	25
Power Supply Conduit Hole Dia. (in)	1.375	1.375	1.375	1.375	1.375
Low-VoltageConduit Hole Dia. (in)	0.5	0.5	0.5	0.5	0.5
OPERATING WEIGHT (LBS.)					
Operating Weight (lbs)	1040	1050	1060	1040	1050
SHIPPING WEIGHT (LBS.)					
Ship Weight (lbs)	1120	1130	1140	1120	1130

[1] Wire size should be determined in accordance with National Electrical Codes. Extensive wire runs will require larger wire sizes.
[2] May use fuses or HACR-type circuit breakers of the same size as noted.
Note: Always check the S&R plate for electrical data on the unit being installed.

Model	DFG0904DH00001S	DFG0907DL00001S	DFG0907DM00001S	DFG0907DH00001S
COOLING CAPACITY				
Total, BTU/h	86,000	86,000	86,000	86,000
EER / IEER	11.2/14.8	11.2/14.8	11.2/14.8	11.2/14.8
AHRI Reference #	2102402218	2102402218	2102402218	2102402218
HEATING CAPACITY				
Heat Range	HIGH	LOW	MEDIUM	HIGH
No. of Burners	7	5	6	7
High Stage Input / Output (KBTU/H)	225/182.25	130/105.3	180/145.8	225/182.25
Low Stage Input / Output (KBTU/H)	168.8/136.7	97.5/79	135/109.4	168.8/136.7
Thermal Efficiency (T.E.)	81%	81%	81%	81%
Annual Fuel Utilization Efficiency (AFUE)	N/A	N/A	N/A	N/A
High Stage Temperature Rise Range (°F)	30-60	25-55	25-55	30-60
Low Stage Temperature Rise Range (°F)	30-60	25-55	25-55	30-60
EVAPORATOR MOTOR / RTPF (ROUND TUBE PLATE FIN)				
Motor Type	Direct Drive	Direct Drive	Direct Drive	Direct Drive
External Static Pressure (ESP)	Standard	Standard	Standard	Standard
Wheel Dia. X Width	15x12	15x12	15x12	15x12
Indoor Nominal CFM	3020	3020	3020	3020
RPM	300-1600	300-1600	300-1600	300-1600
Indoor Horsepower	2.4	2.4	2.4	2.4
Filter Size (in)	20 X 20 X 2 (2) 20 X 25 X 2 (2)	20 X 20 X 2 (2) 20 X 25 X 2 (2)	20 X 20 X 2 (2) 20 X 25 X 2 (2)	20 X 20 X 2 (2) 20 X 25 X 2 (2)
Drain Size (NPT)	3/4	3/4	3/4	3/4
R-410A Refrigerant Charge (oz.)	67/65.4	67/65.4	67/65.4	67/65.4
Evaporator Coil Face Area (ft^2)	13.4	13.4	13.4	13.4
Rows Deep/ Fins per Inch	2 / 16	2 / 16	2 / 16	2 / 16
CONDENSER FAN / MCHX (MICROCHANNEL HEAT EXCHANGER)				
Quantity of Condenser Fan Motors	2	2	2	2
RPM (High/Low stage)	1050	1050	1050	1050
Outdoor Horsepower	1/3	1/3	1/3	1/3
Fan Diameter/ # Fan Blades	22 / 3	22 / 3	22 / 3	22 / 3
Face Area (ft^2)	29.1	29.1	29.1	29.1
Rows Deep / Fins per Inch	1 / 23	1 / 23	1 / 23	1 / 23
COMPRESSOR				
Quantity / Type / Stages per Compressor	2/ Scroll / 1	2/ Scroll / 1	2/ Scroll / 1	2/ Scroll / 1
Compressor RLA / LRA	6.1/41	4.4/33	4.4/33	4.4/33
ELECTRICAL DATA				
Voltage-Phase-Frequency	460-3-60	575-3-60	575-3-60	575-3-60
Indoor Blower FLA	5.4	4	4	4
Max External Static (In. W.C.)	0.8	0.8	0.8	0.8
Outdoor Fan FLA	0.85	0.67	0.67	0.67
Min. Circuit Ampacity[1]	20.8	15.1	15.1	15.1
Max. Overcurrent Protection (A)[2]	25	20	20	20
Power Supply Conduit Hole Dia. (in)	1.375	1.375	1.375	1.375
Low-VoltageConduit Hole Dia. (in)	0.5	0.5	0.5	0.5
OPERATING WEIGHT (LBS.)				
Operating Weight (lbs)	1060	1040	1050	1060
SHIPPING WEIGHT (LBS.)				
Ship Weight (lbs)	1140	1120	1130	1140

[1] Wire size should be determined in accordance with National Electrical Codes. Extensive wire runs will require larger wire sizes.
[2] May use fuses or HACR-type circuit breakers of the same size as noted.
Note: Always check the S&R plate for electrical data on the unit being installed.

Model	DFG1023DL00001S	DFG1023DM00001S	DFG1023DH00001S	DFG1024DL00001S	DFG1024DM00001S
COOLING CAPACITY					
Total, BTU/h	97,000	97,000	97,000	97,000	97,000
EER / IEER	11.2/14.8	11.2/14.8	11.2/14.8	11.2/14.8	11.2/14.8
AHRI Reference #	210240226	210240226	210240226	210240226	210240226
HEATING CAPACITY					
Heat Range	LOW	MEDIUM	HIGH	LOW	MEDIUM
No. of Burners	5	6	7	5	6
High Stage Input / Output (KBTU/H)	130/105.3	180/145.8	225/182.25	130/105.3	180/145.8
Low Stage Input / Output (KBTU/H)	97.5/79	135/109.4	168.8/136.7	97.5/79	135/109.4
Thermal Efficiency (T.E.)	81%	81%	81%	81%	81%
Annual Fuel Utilization Efficiency (AFUE)	N/A	N/A	N/A	N/A	N/A
High Stage Temperature Rise Range (°F)	25-55	25-55	30-60	25-55	25-55
Low Stage Temperature Rise Range (°F)	25-55	25-55	30-60	25-55	25-55
EVAPORATOR MOTOR / RTPF (ROUND TUBE PLATE FIN)					
Motor Type	Direct Drive	Direct Drive	Direct Drive	Direct Drive	Direct Drive
External Static Pressure (ESP)	Standard	Standard	Standard	Standard	Standard
Wheel Dia. X Width	15x12	15x12	15x12	15x12	15x12
Indoor Nominal CFM	3230	3230	3230	3230	3230
RPM	300-1600	300-1600	300-1600	300-1600	300-1600
Indoor Horsepower	2.4	2.4	2.4	2.4	2.4
Filter Size (in)	20 X 20 X 2 (2) 20 X 25 X 2 (2)	20 X 20 X 2 (2) 20 X 25 X 2 (2)	20 X 20 X 2 (2) 20 X 25 X 2 (2)	20 X 20 X 2 (2) 20 X 25 X 2 (2)	20 X 20 X 2 (2) 20 X 25 X 2 (2)
Drain Size (NPT)	3/4	3/4	3/4	3/4	3/4
R-410A Refrigerant Charge (oz.)	71/68	71/68	71/68	71/68	71/68
Evaporator Coil Face Area (ft^2)	13.4	13.4	13.4	13.4	13.4
Rows Deep/ Fins per Inch	2 / 16	2 / 16	2 / 16	2 / 16	2 / 16
CONDENSER FAN / MCHX (MICROCHANNEL HEAT EXCHANGER)					
Quantity of Condenser Fan Motors	2	2	2	2	2
RPM (High/Low stage)	1120	1120	1120	1050	1050
Outdoor Horsepower	1/3	1/3	1/3	1/3	1/3
Fan Diameter/ # Fan Blades	22 / 3	22 / 3	22 / 3	22 / 3	22 / 3
Face Area (ft^2)	29.1	29.1	29.1	29.1	29.1
Rows Deep / Fins per Inch	1 / 23	1 / 23	1 / 23	1 / 23	1 / 23
COMPRESSOR					
Quantity / Type / Stages per Compressor	2/ Scroll / 1	2/ Scroll / 1	2/ Scroll / 1	2/ Scroll / 1	2/ Scroll / 1
Compressor RLA / LRA	14.5/98	14.5/98	14.5/98	6.3/55	6.3/55
ELECTRICAL DATA					
Voltage-Phase-Frequency	208/230-3-60	208/230-3-60	208/230-3-60	460-3-60	460-3-60
Indoor Blower FLA	8	8	8	5.4	5.4
Max External Static (In. W.C.)	0.8	0.8	0.8	0.8	0.8
Outdoor Fan FLA	2	2	2	0.85	0.85
Min. Circuit Ampacity[1]	44.6/44.6	44.6/44.6	44.6/44.6	21.4	21.4
Max. Overcurrent Protection (A)[2]	50/50	50/50	50/50	25	25
Power Supply Conduit Hole Dia. (in)	1.375	1.375	1.375	1.375	1.375
Low-VoltageConduit Hole Dia. (in)	0.5	0.5	0.5	0.5	0.5
OPERATING WEIGHT (LBS.)					
Operating Weight (lbs)	1060	1070	1080	1060	1070
SHIPPING WEIGHT (LBS.)					
Ship Weight (lbs)	1140	1150	1160	1140	1150

[1] Wire size should be determined in accordance with National Electrical Codes. Extensive wire runs will require larger wire sizes.
[2] May use fuses or HACR-type circuit breakers of the same size as noted.
Note: Always check the S&R plate for electrical data on the unit being installed.

Model	DFG1024DH00001S	DFG1027DL00001S	DFG1027DM00001S	DFG1027DH00001S
COOLING CAPACITY				
Total, BTU/h	97,000	97,000	97,000	97,000
EER / IEER	11.2/14.8	11.2/14.8	11.2/14.8	11.2/14.8
AHRI Reference #	210240226	210240226	210240226	210240226
HEATING CAPACITY				
Heat Range	HIGH	LOW	MEDIUM	HIGH
No. of Burners	7	5	6	7
High Stage Input / Output (KBTU/H)	225/182.25	130/105.3	180/145.8	225/182.25
Low Stage Input / Output (KBTU/H)	168.8/136.7	97.5/79	135/109.4	168.8/136.7
Thermal Efficiency (T.E.)	81%	81%	81%	81%
Annual Fuel Utilization Efficiency (AFUE)	N/A	N/A	N/A	N/A
High Stage Temperature Rise Range (°F)	30-60	25-55	25-55	30-60
Low Stage Temperature Rise Range (°F)	30-60	25-55	25-55	30-60
EVAPORATOR MOTOR / RTPF (ROUND TUBE PLATE FIN)				
Motor Type	Direct Drive	Direct Drive	Direct Drive	Direct Drive
External Static Pressure (ESP)	Standard	Standard	Standard	Standard
Wheel Dia. X Width	15x12	15x12	15x12	15x12
Indoor Nominal CFM	3230	3230	3230	3230
RPM	300-1600	300-1600	300-1600	300-1600
Indoor Horsepower	2.4	2.4	2.4	2.4
Filter Size (in)	20 X 20 X 2 (2) 20 X 25 X 2 (2)	20 X 20 X 2 (2) 20 X 25 X 2 (2)	20 X 20 X 2 (2) 20 X 25 X 2 (2)	20 X 20 X 2 (2) 20 X 25 X 2 (2)
Drain Size (NPT)	3/4	3/4	3/4	3/4
R-410A Refrigerant Charge (oz.)	71/68	71/68	71/68	71/68
Evaporator Coil Face Area (ft^2)	13.4	13.4	13.4	13.4
Rows Deep/ Fins per Inch	2 / 16	2 / 16	2 / 16	2 / 16
CONDENSER FAN / MCHX (MICROCHANNEL HEAT EXCHANGER)				
Quantity of Condenser Fan Motors	2	2	2	2
RPM (High/Low stage)	1050	1050	1050	1050
Outdoor Horsepower	1/3	1/3	1/3	1/3
Fan Diameter/ # Fan Blades	22 / 3	22 / 3	22 / 3	22 / 3
Face Area (ft^2)	29.1	29.1	29.1	29.1
Rows Deep / Fins per Inch	1 / 23	1 / 23	1 / 23	1 / 23
COMPRESSOR				
Quantity / Type / Stages per Compressor	2/ Scroll / 1	2/ Scroll / 1	2/ Scroll / 1	2/ Scroll / 1
Compressor RLA / LRA	6.3/55	6/41	6/41	6/41
ELECTRICAL DATA				
Voltage-Phase-Frequency	460-3-60	575-3-60	575-3-60	575-3-60
Indoor Blower FLA	5.4	4.0	4.0	4.0
Max External Static (In. W.C.)	0.8	0.8	0.8	0.8
Outdoor Fan FLA	0.85	0.67	0.67	0.67
Min. Circuit Ampacity[1]	21.4	18.9	18.9	18.9
Max. Overcurrent Protection (A)[2]	25	20	20	20
Power Supply Conduit Hole Dia. (in)	1.375	1.375	1.375	1.375
Low-VoltageConduit Hole Dia. (in)	0.5	0.5	0.5	0.5
OPERATING WEIGHT (LBS.)				
Operating Weight (lbs)	1080	1060	1070	1080
SHIPPING WEIGHT (LBS.)				
Ship Weight (lbs)	1160	1140	1150	1160

[1] Wire size should be determined in accordance with National Electrical Codes. Extensive wire runs will require larger wire sizes.
[2] May use fuses or HACR-type circuit breakers of the same size as noted.
Note: Always check the S&R plate for electrical data on the unit being installed.

Model	DFG1203DL00001S	DFG1203DM00001S	DFG1203DH00001S	DFG1204DL00001S	DFG1204DM00001S
COOLING CAPACITY					
Total, BTU/h	116,000	116,000	116,000	116,000	116,000
EER / IEER	11.2/14.8	11.2/14.8	11.2/14.8	11.2/14.8	11.2/14.8
AHRI Reference #	210240234	210240234	210240234	210240234	210240234
HEATING CAPACITY					
Heat Range	LOW	MEDIUM	HIGH	LOW	MEDIUM
No. of Burners	5	6	7	5	6
High Stage Input / Output (KBTU/H)	130/105.3	180/145.8	240/194.4	130/105.3	180/145.8
Low Stage Input / Output (KBTU/H)	97.5/79	135/109.4	180/145.8	97.5/79	135/109.4
Thermal Efficiency (T.E.)	81%	81%	81%	81%	81%
Annual Fuel Utilization Efficiency (AFUE)	N/A	N/A	N/A	N/A	N/A
High Stage Temperature Rise Range (°F)	25-55	25-55	30-60	25-55	25-55
Low Stage Temperature Rise Range (°F)	25-55	25-55	30-60	25-55	25-55
EVAPORATOR MOTOR / RTPF (ROUND TUBE PLATE FIN)					
Motor Type	Direct Drive	Direct Drive	Direct Drive	Direct Drive	Direct Drive
External Static Pressure (ESP)	Standard	Standard	Standard	Standard	Standard
Wheel Dia. X Width	15x15	15x15	15x15	15x15	15x15
Indoor Nominal CFM	3380	3380	3380	3380	3380
RPM	300-1600	300-1600	300-1600	300-1600	300-1600
Indoor Horsepower	3.5	3.5	3.5	3.5	3.5
Filter Size (in)	20 X 25 X 2 (2) 25 X 25 X 2 (2)	20 X 25 X 2 (2) 25 X 25 X 2 (2)	20 X 25 X 2 (2) 25 X 25 X 2 (2)	20 X 25 X 2 (2) 25 X 25 X 2 (2)	20 X 25 X 2 (2) 25 X 25 X 2 (2)
Drain Size (NPT)	3/4	3/4	3/4	3/4	3/4
R-410A Refrigerant Charge (oz.)	79/82	79/82	79/82	79/82	79/82
Evaporator Coil Face Area (ft^2)	16.2	16.2	16.2	16.2	16.2
Rows Deep/ Fins per Inch	3 / 16	3 / 16	3 / 16	3 / 16	3 / 16
CONDENSER FAN / MCHX (MICROCHANNEL HEAT EXCHANGER)					
Quantity of Condenser Fan Motors	2	2	2	2	2
RPM (High/Low stage)	1120	1120	1120	1050	1050
Outdoor Horsepower	1/3	1/3	1/3	1/3	1/3
Fan Diameter/ # Fan Blades	22 / 3	22 / 3	22 / 3	22 / 3	22 / 3
Face Area (ft^2)	29.1	29.1	29.1	29.1	29.1
Rows Deep / Fins per Inch	1 / 23	1 / 23	1 / 23	1 / 23	1 / 23
COMPRESSOR					
Quantity / Type / Stages per Compressor	2/ Scroll / 1	2/ Scroll / 1	2/ Scroll / 1	2/ Scroll / 1	2/ Scroll / 1
Compressor RLA / LRA	15.6/110	15.6/110	15.6/110	7.8 / 52.0	7.8 / 52.0
ELECTRICAL DATA					
Voltage-Phase-Frequency	208/230-3-60	208/230-3-60	208/230-3-60	460-3-60	460-3-60
Indoor Blower FLA	10.9	10.9	10.9	7.2	7.2
Max External Static (In. W.C.)	0.8	0.8	0.8	0.8	0.8
Outdoor Fan FLA	2	2	2	0.85	0.85
Min. Circuit Ampacity[1]	50.1/50.1	50.1/50.1	50.1/50.1	26.4	26.4
Max. Overcurrent Protection (A)[2]	60/60	60/60	60/60	30	30
Power Supply Conduit Hole Dia. (in)	1.375	1.375	1.375	1.375	1.375
Low-VoltageConduit Hole Dia. (in)	0.5	0.5	0.5	0.5	0.5
OPERATING WEIGHT (LBS.)					
Operating Weight (lbs)	1119	1129	1139	1119	1129
SHIPPING WEIGHT (LBS.)					
Ship Weight (lbs)	1199	1209	1219	1199	1209

[1] Wire size should be determined in accordance with National Electrical Codes. Extensive wire runs will require larger wire sizes.
[2] May use fuses or HACR-type circuit breakers of the same size as noted.
Note: Always check the S&R plate for electrical data on the unit being installed.

Model	DFG1204DH00001S	DFG1207DL00001S	DFG1207DM00001S	DFG1207DH00001S
COOLING CAPACITY				
Total, BTU/h	116,000	116,000	116,000	116,000
EER / iEER	11.2/14.8	11.2/14.8	11.2/14.8	11.2/14.8
AHRI Reference #	210240234	210240234	210240234	210240234
HEATING CAPACITY				
Heat Range	HIGH	LOW	MEDIUM	HIGH
No. of Burners	7	5	6	7
High Stage Input / Output (KBTU/H)	240/194.4	130/105.3	180/145.8	240/194.4
Low Stage Input / Output (KBTU/H)	180/145.8	97.5/79	135/109.4	180/145.8
Thermal Efficiency (T.E.)	81%	81%	81%	81%
Annual Fuel Utilization Efficiency (AFUE)	N/A	N/A	N/A	N/A
High Stage Temperature Rise Range (°F)	30-60	25-55	25-55	30-60
Low Stage Temperature Rise Range (°F)	30-60	25-55	25-55	30-60
EVAPORATOR MOTOR / RTPF (ROUND TUBE PLATE FIN)				
Motor Type	Direct Drive	Direct Drive	Direct Drive	Direct Drive
External Static Pressure (ESP)	Standard	Standard	Standard	Standard
Wheel Dia. X Width	15x15	15x15	15x15	15x15
Indoor Nominal CFM	3380	3380	3380	3380
RPM	300-1600	300-1600	300-1600	300-1600
Indoor Horsepower	3.5	3.5	3.5	3.5
Filter Size (in)	20 X 25 X 2 (2) 25 X 25 X 2 (2)	20 X 25 X 2 (2) 25 X 25 X 2 (2)	20 X 25 X 2 (2) 25 X 25 X 2 (2)	20 X 25 X 2 (2) 25 X 25 X 2 (2)
Drain Size (NPT)	3/4	3/4	3/4	3/4
R-410A Refrigerant Charge (oz.)	79/82	79/82	79/82	79/82
Evaporator Coil Face Area (ft^2)	16.2	16.2	16.2	16.2
Rows Deep/ Fins per Inch	3 / 16	3 / 16	3 / 16	3 / 16
CONDENSER FAN / MCHX (MICROCHANNEL HEAT EXCHANGER)				
Quantity of Condenser Fan Motors	2	2	2	2
RPM (High/Low stage)	1050	1050	1050	1050
Outdoor Horsepower	1/3	1/3	1/3	1/3
Fan Diameter/ # Fan Blades	22 / 3	22 / 3	22 / 3	22 / 3
Face Area (ft^2)	29.1	29.1	29.1	29.1
Rows Deep / Fins per Inch	1 / 23	1 / 23	1 / 23	1 / 23
COMPRESSOR				
Quantity / Type / Stages per Compressor	2/ Scroll / 1	2/ Scroll / 1	2/ Scroll / 1	2/ Scroll / 1
Compressor RLA / LRA	7.8 / 52.0	5.8/38.9	5.8/38.9	5.8/38.9
ELECTRICAL DATA				
Voltage-Phase-Frequency	460-3-60	575-3-60	575-3-60	575-3-60
Indoor Blower FLA	7.2	5.0	5.0	5.0
Max External Static (In. W.C.)	0.8	0.8	0.8	0.8
Outdoor Fan FLA	0.85	0.67	0.67	0.67
Min. Circuit Ampacity[1]	26.4	19.5	19.5	19.5
Max. Overcurrent Protection (A)[2]	30	25	25	25
Power Supply Conduit Hole Dia. (in)	1.375	1.375	1.375	1.375
Low-VoltageConduit Hole Dia. (in)	0.5	0.5	0.5	0.5
OPERATING WEIGHT (LBS.)				
Operating Weight (lbs)	1139	1119	1129	1139
SHIPPING WEIGHT (LBS.)				
Ship Weight (lbs)	1219	1199	1209	1219

[1] Wire size should be determined in accordance with National Electrical Codes. Extensive wire runs will require larger wire sizes.
[2] May use fuses or HACR-type circuit breakers of the same size as noted.
Note: Always check the S&R plate for electrical data on the unit being installed.

Model	DFG1503DL00001S	DFG1503DM00001S	DFG1503DH00001S	DFG1504DL00001S	DFG1504DM00001S
COOLING CAPACITY					
Total, BTU/h	140,000	140,000	140,000	140,000	140,000
EER / IEER	11/14.2	11/14.2	11/14.2	11/14.2	11/14.2
AHRI Reference #	210240242	210240242	210240242	210240242	210240242
HEATING CAPACITY					
Heat Range	LOW	MEDIUM	HIGH	LOW	MEDIUM
No. of Burners	5	6	7	5	6
High Stage Input / Output (KBTU/H)	130/105.3	180/145.8	240/194.4	130/105.3	180/145.8
Low Stage Input / Output (KBTU/H)	97.5/79	135/109.4	180/145.8	97.5/79	135/109.4
Thermal Efficiency (T.E.)	81%	81%	81%	81%	81%
Annual Fuel Utilization Efficiency (AFUE)	N/A	N/A	N/A	N/A	N/A
High Stage Temperature Rise Range (°F)	25-55	25-55	30-60	25-55	25-55
Low Stage Temperature Rise Range (°F)	25-55	25-55	30-60	25-55	25-55
EVAPORATOR MOTOR / RTPF (ROUND TUBE PLATE FIN)					
Motor Type	Direct Drive	Direct Drive	Direct Drive	Direct Drive	Direct Drive
External Static Pressure (ESP)	Standard	Standard	Standard	Standard	Standard
Wheel Dia. X Width	15x15	15x15	15x15	15x15	15x15
Indoor Nominal CFM	4200	4200	4200	4200	4200
RPM	300-1600	300-1600	300-1600	300-1600	300-1600
Indoor Horsepower	3.5	3.5	3.5	3.5	3.5
Filter Size (in)	20 X 25 X 2 (2) 25 X 25 X 2 (2)	20 X 25 X 2 (2) 25 X 25 X 2 (2)	20 X 25 X 2 (2) 25 X 25 X 2 (2)	20 X 25 X 2 (2) 25 X 25 X 2 (2)	20 X 25 X 2 (2) 25 X 25 X 2 (2)
Drain Size (NPT)	3/4	3/4	3/4	3/4	3/4
R-410A Refrigerant Charge (oz.)	148/142	148/142	148/142	148/142	148/142
Evaporator Coil Face Area (ft^2)	16.3	16.3	16.3	16.3	16.3
Rows Deep/ Fins per Inch	4 / 16	4 / 16	4 / 16	4 / 16	4 / 16
CONDENSER FAN / MCHX (MICROCHANNEL HEAT EXCHANGER)					
Quantity of Condenser Fan Motors	2	2	2	2	2
RPM (High/Low stage)	1130	1130	1130	1115	1115
Outdoor Horsepower	1/2	1/2	1/2	1/2	1/2
Fan Diameter/ # Fan Blades	22 / 3	22 / 3	22 / 3	22 / 3	22 / 3
Face Area (ft^2)	40.8	40.8	40.8	40.8	40.8
Rows Deep / Fins per Inch	1 / 23	1 / 23	1 / 23	1 / 23	1 / 23
COMPRESSOR					
Quantity / Type / Stages per Compressor	2/ Scroll / 1	2/ Scroll / 1	2/ Scroll / 1	2/ Scroll / 1	2/ Scroll / 1
Compressor RLA / LRA	19/123	19/123	19/123	9.7/62	9.7/62
ELECTRICAL DATA					
Voltage-Phase-Frequency	208/230-3-60	208/230-3-60	208/230-3-60	460-3-60	460-3-60
Indoor Blower FLA	10.9	10.9	10.9	7.2	7.2
Max External Static (In. W.C.)	0.8	0.8	0.8	0.8	0.8
Outdoor Fan FLA	2.7	2.7	2.7	1.4	1.4
Min. Circuit Ampacity[1]	59.1/59.1	59.1/59.1	59.1/59.1	31.9	31.9
Max. Overcurrent Protection (A)[2]	70/70	70/70	70/70	40	40
Power Supply Conduit Hole Dia. (in)	1.375	1.375	1.375	1.375	1.375
Low-VoltageConduit Hole Dia. (in)	0.5	0.5	0.5	0.5	0.5
OPERATING WEIGHT (LBS.)					
Operating Weight (lbs)	1210	1220	1230	1210	1220
SHIPPING WEIGHT (LBS.)					
Ship Weight (lbs)	1290	1300	1310	1290	1300

[1] Wire size should be determined in accordance with National Electrical Codes. Extensive wire runs will require larger wire sizes.
[2] May use fuses or HACR-type circuit breakers of the same size as noted.
Note: Always check the S&R plate for electrical data on the unit being installed.

Model	DFG1504DH00001S	DFG1507DL00001S	DFG1507DM00001S	DFG1507DH00001S
COOLING CAPACITY				
Total, BTU/h	140,000	140,000	140,000	140,000
EER / IEER	11/14.2	11/14.2	11/14.2	11/14.2
AHRI Reference #	210240242	210240242	210240242	210240242
HEATING CAPACITY				
Heat Range	HIGH	LOW	MEDIUM	HIGH
No. of Burners	7	5	6	7
High Stage Input / Output (KBTU/H)	240/194.4	130/105.3	180/145.8	240/194.4
Low Stage Input / Output (KBTU/H)	180/145.8	97.5/79	135/109.4	180/145.8
Thermal Efficiency (T.E.)	81%	81%	81%	81%
Annual Fuel Utilization Efficiency (AFUE)	N/A	N/A	N/A	N/A
High Stage Temperature Rise Range (°F)	30-60	25-55	25-55	30-60
Low Stage Temperature Rise Range (°F)	30-60	25-55	25-55	30-60
EVAPORATOR MOTOR / RTPF (ROUND TUBE PLATE FIN)				
Motor Type	Direct Drive	Direct Drive	Direct Drive	Direct Drive
External Static Pressure (ESP)	Standard	Standard	Standard	Standard
Wheel Dia. X Width	15x15	15x15	15x15	15x15
Indoor Nominal CFM	4200	4200	4200	4200
RPM	300-1600	300-1600	300-1600	300-1600
Indoor Horsepower	3.5	3.5	3.5	3.5
Filter Size (in)	20 X 25 X 2 (2) 25 X 25 X 2 (2)	20 X 25 X 2 (2) 25 X 25 X 2 (2)	20 X 25 X 2 (2) 25 X 25 X 2 (2)	20 X 25 X 2 (2) 25 X 25 X 2 (2)
Drain Size (NPT)	3/4	3/4	3/4	3/4
R-410A Refrigerant Charge (oz.)	148/142	148/142	148/142	148/142
Evaporator Coil Face Area (ft^2)	16.3	16.3	16.3	16.3
Rows Deep/ Fins per Inch	4 / 16	4 / 16	4 / 16	4 / 16
CONDENSER FAN / MCHX (MICROCHANNEL HEAT EXCHANGER)				
Quantity of Condenser Fan Motors	2	2	2	2
RPM (High/Low stage)	1115	1075	1075	1075
Outdoor Horsepower	1/2	1/2	1/2	1/2
Fan Diameter/ # Fan Blades	22 / 3	22 / 3	22 / 3	22 / 3
Face Area (ft^2)	40.8	40.8	40.8	40.8
Rows Deep / Fins per Inch	1 / 23	1 / 23	1 / 23	1 / 23
COMPRESSOR				
Quantity / Type / Stages per Compressor	2/ Scroll / 1	2/ Scroll / 1	2/ Scroll / 1	2/ Scroll / 1
Compressor RLA / LRA	9.7/62	7.4/50	7.4/50	7.4/50
ELECTRICAL DATA				
Voltage-Phase-Frequency	460-3-60	575-3-60	575-3-60	575-3-60
Indoor Blower FLA	7.2	5	5	5
Max External Static (In. W.C.)	0.8	0.8	0.8	0.8
Outdoor Fan FLA	1.4	1	1	1
Min. Circuit Ampacity[1]	31.9	23.7	23.7	23.7
Max. Overcurrent Protection (A)[2]	40	30	30	30
Power Supply Conduit Hole Dia. (in)	1.375	1.375	1.375	1.375
Low-VoltageConduit Hole Dia. (in)	0.5	0.5	0.5	0.5
OPERATING WEIGHT (LBS.)				
Operating Weight (lbs)	1230	1210	1220	1230
SHIPPING WEIGHT (LBS.)				
Ship Weight (lbs)	1310	1290	1300	1310

[1] Wire size should be determined in accordance with National Electrical Codes. Extensive wire runs will require larger wire sizes.
[2] May use fuses or HACR-type circuit breakers of the same size as noted.
Note: Always check the S&R plate for electrical data on the unit being installed.

Model	DFG1503LL00001F	DFG1503LM00001F	DFG1503LH00001F	DFG1504LL00001F	DFG1504LM00001F
COOLING CAPACITY					
Total, BTU/h	140,000	140,000	140,000	140,000	140,000
EER / IEER	11/14.2	11/14.2	11/14.2	11/14.2	11/14.2
AHRI Reference #	210240242	210240242	210240242	210240242	210240242
HEATING CAPACITY					
Heat Range	LOW	MEDIUM	HIGH	LOW	MEDIUM
No. of Burners	5	6	7	5	6
High Stage Input / Output (KBTU/H)	130/105.3	180/145.8	240/194.4	130/105.3	180/145.8
Low Stage Input / Output (KBTU/H)	97.5/79	135/109.4	180/145.8	97.5/79	135/109.4
Thermal Efficiency (T.E.)	81%	81%	81%	81%	81%
Annual Fuel Utilization Efficiency (AFUE)	N/A	N/A	N/A	N/A	N/A
High Stage Temperature Rise Range (°F)	25-55	25-55	30-60	25-55	25-55
Low Stage Temperature Rise Range (°F)	25-55	25-55	30-60	25-55	25-55
EVAPORATOR MOTOR / RTPF (ROUND TUBE PLATE FIN)					
Motor Type	Direct Drive	Direct Drive	Direct Drive	Direct Drive	Direct Drive
External Static Pressure (ESP)	Medium	Medium	Medium	Medium	Medium
Wheel Dia. X Width	15x15	15x15	15x15	15x15	15x15
Indoor Nominal CFM	4200	4200	4200	4200	4200
RPM	300-1600	300-1600	300-1600	300-1600	300-1600
Indoor Horsepower	5.0	5.0	5.0	5.0	5.0
Filter Size (in)	20 X 25 X 2 (2) 25 X 25 X 2 (2)	20 X 25 X 2 (2) 25 X 25 X 2 (2)	20 X 25 X 2 (2) 25 X 25 X 2 (2)	20 X 25 X 2 (2) 25 X 25 X 2 (2)	20 X 25 X 2 (2) 25 X 25 X 2 (2)
Drain Size (NPT)	3/4	3/4	3/4	3/4	3/4
R-410A Refrigerant Charge (oz.)	148/142	148/142	148/142	148/142	148/142
Evaporator Coil Face Area (ft^2)	16.3	16.3	16.3	16.3	16.3
Rows Deep/ Fins per Inch	4/ 16	4 / 16	4 / 16	4 / 16	4 / 16
CONDENSER FAN / MCHX (MICROCHANNEL HEAT EXCHANGER)					
Quantity of Condenser Fan Motors	2	2	2	2	2
RPM (High/Low stage)	1130	1130	1130	1115	1115
Outdoor Horsepower	1/2	1/2	1/2	1/2	1/2
Fan Diameter/ # Fan Blades	22 / 3	22 / 3	22 / 3	22 / 3	22 / 3
Face Area (ft^2)	40.8	40.8	40.8	40.8	40.8
Rows Deep / Fins per Inch	1 / 23	1 / 23	1 / 23	1 / 23	1 / 23
COMPRESSOR					
Quantity / Type / Stages per Compressor	2/ Scroll / 1	2/ Scroll / 1	2/ Scroll / 1	2/ Scroll / 1	2/ Scroll / 1
Compressor RLA / LRA	19/123	19/123	19/123	9.7/62	9.7/62
ELECTRICAL DATA					
Voltage-Phase-Frequency	208/230-3-60	208/230-3-60	208/230-3-60	460-3-60	460-3-60
Indoor Blower FLA	14.5	14.5	14.5	10.6	10.6
Max External Static (In. W.C.)	1.4	1.4	1.4	1.4	1.4
Outdoor Fan FLA	2.7	2.7	2.7	1.4	1.4
Min. Circuit Ampacity[1]	62.7/62.7	62.7/62.7	62.7/62.7	35.3	35.3
Max. Overcurrent Protection (A)[2]	80/80	80/80	80/80	45	45
Power Supply Conduit Hole Dia. (in)	1.375	1.375	1.375	1.375	1.375
Low-VoltageConduit Hole Dia. (in)	0.5	0.5	0.5	0.5	0.5
OPERATING WEIGHT (LBS.)					
Operating Weight (lbs)	1210	1220	1230	1210	1220
SHIPPING WEIGHT (LBS.)					
Ship Weight (lbs)	1290	1300	1310	1290	1300

[1] Wire size should be determined in accordance with National Electrical Codes. Extensive wire runs will require larger wire sizes.
[2] May use fuses or HACR-type circuit breakers of the same size as noted.
Note: Always check the S&R plate for electrical data on the unit being installed.

Model	DFG1504LH00001F	DFG1507LL00001F	DFG1507LM00001F	DFG1507LH00001F
COOLING CAPACITY				
Total, BTU/h	140,000	140,000	140,000	140,000
EER / IEER	11/14.2	11/14.2	11/14.2	11/14.2
AHRI Reference #	210240242	210240242	210240242	210240242
HEATING CAPACITY				
Heat Range	HIGH	LOW	MEDIUM	HIGH
No. of Burners	7	5	6	7
High Stage Input / Output (KBTU/H)	240/194.4	130/105.3	180/145.8	240/194.4
Low Stage Input / Output (KBTU/H)	180/145.8	97.5/79	135/109.4	180/145.8
Thermal Efficiency (T.E.)	81%	81%	81%	81%
Annual Fuel Utilization Efficiency (AFUE)	N/A	N/A	N/A	N/A
High Stage Temperature Rise Range (°F)	30-60	25-55	25-55	30-60
Low Stage Temperature Rise Range (°F)	30-60	25-55	25-55	30-60
EVAPORATOR MOTOR / RTPF (ROUND TUBE PLATE FIN)				
Motor Type	Direct Drive	Direct Drive	Direct Drive	Direct Drive
External Static Pressure (ESP)	Medium	Medium	Medium	Medium
Wheel Dia. X Width	15x15	15x15	15x15	15x15
Indoor Nominal CFM	4200	4200	4200	4200
RPM	300-1600	300-1600	300-1600	300-1600
Indoor Horsepower	5.0	5.0	5.0	5.0
Filter Size (in)	20 X 25 X 2 (2) 25 X 25 X 2 (2)	20 X 25 X 2 (2) 25 X 25 X 2 (2)	20 X 25 X 2 (2) 25 X 25 X 2 (2)	20 X 25 X 2 (2) 25 X 25 X 2 (2)
Drain Size (NPT)	3/4	3/4	3/4	3/4
R-410A Refrigerant Charge (oz.)	148/142	148/142	148/142	148/142
Evaporator Coil Face Area (ft^2)	16.3	16.3	16.3	16.3
Rows Deep/ Fins per Inch	4 / 16	4 / 16	4 / 16	4 / 16
CONDENSER FAN / MCHX (MICROCHANNEL HEAT EXCHANGER)				
Quantity of Condenser Fan Motors	2	2	2	2
RPM (High/Low stage)	1115	1075	1075	1075
Outdoor Horsepower	1/2	1/2	1/2	1/2
Fan Diameter/ # Fan Blades	22 / 3	22 / 3	22 / 3	22 / 3
Face Area (ft^2)	40.8	40.8	40.8	40.8
Rows Deep / Fins per Inch	1 / 23	1 / 23	1 / 23	1 / 23
COMPRESSOR				
Quantity / Type / Stages per Compressor	2/ Scroll / 1	2/ Scroll / 1	2/ Scroll / 1	2/ Scroll / 1
Compressor RLA / LRA	9.7/62	7.4/50	7.4/50	7.4/50
ELECTRICAL DATA				
Voltage-Phase-Frequency	460-3-60	575-3-60	575-3-60	575-3-60
Indoor Blower FLA	10.6	7.2	7.2	7.2
Max External Static (In. W.C.)	1.4	1.4	1.4	1.4
Outdoor Fan FLA	1.4	1	1	1
Min. Circuit Ampacity[1]	35.3	25.9	25.9	25.9
Max. Overcurrent Protection (A)[2]	45	30	30	30
Power Supply Conduit Hole Dia. (in)	1.375	1.375	1.375	1.375
Low-VoltageConduit Hole Dia. (in)	0.5	0.5	0.5	0.5
OPERATING WEIGHT (LBS.)				
Operating Weight (lbs)	1230	1210	1220	1230
SHIPPING WEIGHT (LBS.)				
Ship Weight (lbs)	1310	1290	1300	1310

[1] Wire size should be determined in accordance with National Electrical Codes. Extensive wire runs will require larger wire sizes.
[2] May use fuses or HACR-type circuit breakers of the same size as noted.
Note: Always check the S&R plate for electrical data on the unit being installed.

Coil Dimensions

	Indoor			Outdoor		
Tons	Fin height in.	Fin length in.	Area (Ft^2)	Fin height in.	Fin length in.	Area (Ft^2)
7.5	42.0	46.0	13.4	45.6	46.0	29.1
8.5	42.0	46.0	13.4	45.6	45.9	29.1
10	45.0	51.8	16.2	45.6	45.9	29.1
12.5	45.0	51.8	16.2	48.6	60.4	40.8

AHRI Ratings

Gas / Electric			
Model	Capacity	EER	IEER
DFG0903D	88,000	11.2	14.8
DFG0904D	88,000	11.2	14.8
DFG0907D	88,000	11.2	14.8
DFG1023D	97,000	11.2	14.8
DFG1024D	97,000	11.2	14.8
DFG1027D	97,000	11.2	14.8
DFG1203D	116,000	11.2	14.8
DFG1204D	116,000	11.2	14.8
DFG1207D	116,000	11.2	14.8
DFG1503D	140,000	11.0	14.2
DFG1504D	140,000	11.0	14.2
DFG1507D	140,000	11.0	14.2

Sound Data

Static Pressure	7.5 Ton Sound (DB) at 60 Hz										
	Indoor CFM	Component	A-Weighted	63	125	250	500	1000	2000	4000	8000
0.8	3,000	Discharge	68.7	92.1	76.0	63.9	62.6	62.1	57.2	56.3	46.4
		Inlet	63.8	87.9	72.4	64.4	58.2	52.2	46.9	47.1	46.3
1.4		Discharge	78.3	98.6	87.0	72.2	72.7	72.8	68.5	66.7	60.8
		Inlet	70.2	90.7	80.7	69.6	64.6	61.7	56.6	56.5	53
2.0		Discharge	82.4	97.6	88.4	85	77.1	77.1	72.5	71.7	67.3
		Inlet	74.8	92.6	84.0	78.2	69.9	66.5	61.8	62.1	58.4
N/A	N/A	Outdoor	82.6	89.2	86.0	83.1	79.2	77.3	74.2	69.6	67.7

Static Pressure	8.5 Ton Sound (DB) at 60 Hz										
	Indoor CFM	Componet	A-Weighted	63	125	250	500	1000	2000	4000	8000
0.8	3,400	Discharge	71.3	93.5	79.9	65.3	66.0	65.1	60.8	58.1	49.9
		Inlet	65.3	87.0	75.8	66.8	59.7	54.6	49.8	49.2	47.0
1.4		Discharge	81.5	99.6	88.8	78.8	76.4	76.6	71.5	70.3	64.9
		Inlet	73.1	91.4	82.8	74.6	67.4	66.2	60.0	60.5	56.7
2.0		Discharge	80.8	99.7	89.4	76.1	75.2	75.5	71.4	69.7	65.3
		Inlet	72.7	92.5	82.6	73.6	66.9	64.3	59.5	59.5	56.0
N/A	N/A	Outdoor	82.6	89.2	86.0	83.1	79.2	77.3	74.2	69.6	67.7

Static Pressure	10 Ton Sound (DB) at 60 Hz										
	Indoor CFM	Componet	A-Weighted	63	125	250	500	1000	2000	4000	8000
0.8	4,000	Discharge	74.5	92.3	82.2	71.0	70.8	69.0	64.1	65.6	55.6
		Inlet	67.2	88.8	76.6	66.8	62.2	58.5	54.7	52.4	47.4
1.4		Discharge	76.8	95.8	85.3	72.2	71.7	71.2	67.3	65.2	59.8
		Inlet	69.2	89.5	79.3	68.8	63.9	60.6	57.1	55.5	50.5
2.0		Discharge	77.1	96.2	85.3	72.5	72.0	71.5	67.6	65.3	59.9
		Inlet	71.0	91.7	81.2	70.8	65.2	62.0	58.8	57.4	53.1
N/A	N/A	Outdoor	82.6	89.2	86.0	83.1	79.2	77.3	74.2	69.6	67.7

Static Pressure	12.5 Ton Sound (DB) at 60 Hz										
	Indoor CFM	Componet	A-Weighted	63	125	250	500	1000	2000	4000	8000
0.8	5,000	Discharge	78.5	92.6	82.0	73.2	74.2	74.5	69.4	68.6	63.2
		Inlet	70.1	92.3	78.8	68.7	64.0	62.2	57.7	57.3	52.2
1.4		Discharge	79.5	93.1	84.7	77.1	74.9	75.4	69.9	68.9	63.8
		Inlet	72.0	91.9	52.6	72.5	66.4	63.8	59.5	58.8	53.8
2.0		Discharge	82.4	100.4	90.1	78.2	77.3	77.2	72.9	71.1	66.7
		Inlet	73.4	93.2	84.0	73.1	67.9	65.0	61.4	60.7	56.0
N/A	N/A	Outdoor	86.8	95.4	85.3	86.8	83.3	81.7	79.8	72.2	66.9

[1] Outdoor sound data is measured in accordance with AHRI standard 270

[2] Discharge and Inlet sound data was measured in accordanced with AHRI standard 260.

[3] Measurements are expressed in terms of sound power. Do not compare these values to sound pressure values because sound pressure depends on specific environment factors which normally do not match individual applications. Sound power values are independent of the environment and therefore more accurate.

[4] A-weighted sound ratings filter out high and very low frequencies, to better approximate the response of "average" human ear. A-weighted measurements for Daikin units are taken in accordance with AHRI standards 260 and 270.

			Outdoor Ambient Temperature																							
			65				75				85				95				105				115			
			Entering Indoor Wet Bulb Temperature																							
IDB	Airflow	ID WB	59	63	67	71	59	63	67	71	59	63	67	71	59	63	67	71	59	63	67	71	59	63	67	71
70	2625	MBh	89.5	90.8	93.5	-	88.7	90.0	92.7	-	86.4	87.7	90.3	-	82.4	83.6	86.3	-	77.5	78.7	81.4	-	73.0	74.2	76.9	-
		S/T	0.70	0.58	0.41	-	0.71	0.60	0.42	-	0.74	0.61	0.43	-	0.76	0.63	0.44	-	0.77	0.66	0.45	-	0.81	0.66	0.46	-
		ΔT	18.63	16.91	13.69	-	18.59	16.86	13.65	-	18.83	17.11	13.89	-	18.57	16.85	13.63	-	18.34	16.62	13.40	-	19.42	17.69	14.48	-
		Hi PR	254	255	257	-	295	296	297	-	337	338	339	-	382	383	385	-	431	432	434	-	483	484	486	-
		Lo PR	115	116	119	-	122	123	126	-	128	129	132	-	133	134	137	-	138	140	142	-	144	146	149	-
	3000	MBh	90.7	92.0	94.6	-	89.9	91.2	93.8	-	87.6	88.8	91.5	-	83.5	84.8	87.5	-	78.6	79.9	82.6	-	74.1	75.4	78.1	-
		S/T	0.72	0.60	0.42	-	0.73	0.61	0.43	-	0.76	0.63	0.45	-	0.78	0.65	0.46	-	0.80	0.67	0.47	-	0.82	0.69	0.48	-
		ΔT	17.59	15.87	12.65	-	17.55	15.82	12.60	-	17.79	16.06	12.85	-	17.53	15.80	12.59	-	17.30	15.57	12.36	-	18.38	16.65	13.44	-
		Hi PR	257	258	259	-	297	298	300	-	339	340	342	-	384	385	387	-	433	434	436	-	485	486	488	-
		Lo PR	116	118	121	-	123	125	128	-	130	131	134	-	135	136	139	-	140	141	144	-	146	148	150	-
	3375	MBh	92.1	93.4	96.1	-	91.3	92.6	95.3	-	89.0	90.2	92.9	-	85.0	86.2	88.9	-	80.0	81.3	84.0	-	75.6	76.8	79.5	-
		S/T	0.73	0.62	0.43	-	0.76	0.63	0.44	-	0.78	0.65	0.46	-	0.80	0.67	0.47	-	0.82	0.69	0.49	-	0.86	0.72	0.50	-
		ΔT	16.72	14.99	11.78	-	16.67	14.95	11.73	-	16.91	15.19	11.97	-	16.65	14.93	11.71	-	16.42	14.70	11.48	-	17.50	15.78	12.56	-
		Hi PR	259	260	262	-	299	300	302	-	341	342	344	-	386	387	389	-	435	436	438	-	487	488	490	-
		Lo PR	118	120	123	-	125	127	130	-	131	133	136	-	137	138	141	-	142	143	146	-	148	149	152	-
75	2625	MBh	89.6	90.8	93.5	97.6	88.8	90.0	92.7	96.8	86.4	87.7	90.4	94.5	82.4	83.7	86.4	90.4	77.5	78.8	81.4	85.5	73.0	74.3	75.2	81.0
		S/T	0.80	0.69	0.53	0.36	0.83	0.74	0.53	0.41	0.83	0.74	0.54	0.38	0.85	0.75	0.56	0.42	0.88	0.80	0.58	0.45	0.89	0.81	0.61	0.46
		ΔT	22.42	20.70	17.48	14.1	22.38	20.65	17.43	14.1	22.62	20.89	17.68	14.3	22.36	20.63	17.42	14.1	22.13	20.40	17.19	13.9	23.21	21.48	18.27	14.9
		Hi PR	255	256	258	262	295	296	298	302	337	338	340	344	382	383	385	389	431	432	434	438	483	484	486	490
		Lo PR	115	116	119	124	122	123	126	131	128	129	132	137	133	134	137	142	138	140	142	147	144	146	149	154
	3000	MBh	90.8	92.0	94.7	98.8	90.0	91.2	93.9	98.0	87.6	88.9	91.6	95.6	83.6	**84.9**	87.5	91.6	78.7	79.9	82.6	86.7	74.2	75.5	78.1	82.2
		S/T	0.82	0.72	0.56	0.41	0.84	0.75	0.56	0.42	0.85	0.76	0.57	0.43	0.87	**0.78**	0.59	0.46	0.91	0.82	0.61	0.47	0.92	0.83	0.62	0.47
		ΔT	21.38	19.66	16.44	13.1	21.33	19.61	16.39	13.1	21.58	19.85	16.64	13.3	21.32	**19.59**	16.38	13.0	21.09	19.36	16.15	12.8	22.17	20.44	17.22	13.9
		Hi PR	257	258	260	264	297	298	300	304	339	340	342	346	384	**385**	387	392	433	434	436	440	485	486	488	493
		Lo PR	116	118	121	126	123	125	128	133	130	131	134	139	135	**136**	139	144	140	141	144	149	146	148	150	155
	3375	MBh	92.2	93.4	96.1	100.2	91.4	92.6	95.3	99.4	89.0	88.2	93.0	97.1	85.0	86.3	88.9	93.0	80.1	81.4	84.0	88.1	75.6	76.9	79.5	83.6
		S/T	0.84	0.74	0.58	0.44	0.84	0.77	0.58	0.45	0.87	0.73	0.61	0.47	0.89	0.80	0.62	0.49	0.93	0.85	0.63	0.51	0.95	0.85	0.65	0.49
		ΔT	20.50	18.78	15.56	12.2	20.46	18.73	15.52	12.2	20.70	18.98	15.76	12.4	20.44	18.72	15.50	12.2	20.21	18.49	15.27	11.9	21.29	19.57	16.35	13.0
		Hi PR	259	260	262	266	299	300	302	306	341	342	344	348	386	387	389	394	435	436	438	443	487	488	490	495
		Lo PR	118	120	123	128	125	127	130	135	131	133	136	141	137	138	141	146	142	143	146	151	148	149	152	157

IDB: Entering Indoor Dry Bulb Temperature

Shaded area reflects ACCA (TVA) conditions

kW = Total system power

High and low pressures are measured at the liquid and suction access fittings.

Amps: Unit amps (comp.+ evaporator + condenser fan motors)

Design Subcooling, 16 - 19 °F @ the liquid access fitting connection ARI 95 test conditions. Design Superheat 8 - 12°F @ the compressor suction access fitting connection.

Expanded Cooling Data

DFG090 (cont.)

			Outdoor Ambient Temperature																							
			65				75				85				95				105				115			
			Entering Indoor Wet Bulb Temperature																							
IDB	Airflow	ID WB	59	63	67	71	59	63	67	71	59	63	67	71	59	63	67	71	59	63	67	71	59	63	67	71
80	2625	MBh	90.0	91.3	94.0	98.1	89.2	90.5	93.2	97.3	86.9	88.2	90.8	94.9	82.9	84.1	86.8	90.9	78.0	79.2	81.9	86.0	73.5	74.7	77.4	81.5
		S/T	0.89	0.83	0.64	0.47	0.89	0.84	0.68	0.50	0.92	0.86	0.70	0.54	0.94	0.89	0.71	0.52	0.98	0.92	0.75	0.57	0.98	0.92	0.76	0.59
		ΔT	26.24	24.51	21.30	18.0	26.19	24.47	21.25	17.9	26.43	24.71	21.49	18.2	26.17	24.45	21.23	17.9	25.94	24.22	21.00	17.7	27.02	25.30	22.08	18.7
		Hi PR	255	256	258	262	295	296	298	303	337	338	340	345	383	384	385	390	431	432	434	439	483	485	486	491
		Lo PR	115	117	120	125	122	124	127	131	128	130	133	138	134	135	138	143	139	140	143	148	145	146	149	154
	3000	MBh	91.2	92.5	95.2	99.2	90.4	91.7	94.4	98.4	88.1	89.3	92.0	96.1	84.1	85.3	**88.0**	92.1	79.1	80.4	83.1	87.2	74.7	75.9	78.6	82.7
		S/T	0.87	0.81	0.66	0.50	0.91	0.84	0.70	0.53	0.93	0.86	0.71	0.56	0.96	0.90	**0.72**	0.57	1.00	0.93	0.76	0.58	1.00	0.94	0.78	0.59
		ΔT	25.20	23.47	20.26	16.9	25.15	23.43	20.21	16.9	25.39	23.67	20.45	17.1	25.13	23.41	**20.19**	16.9	24.90	23.18	19.96	16.6	25.98	24.26	21.04	17.7
		Hi PR	257	258	260	264.6	297	298	300	305	339	341	342	347	385	386	**388**	392	434	435	436	441	486	487	489	493
		Lo PR	117	118	121	126	124	125	128	133	130	131	134	139	135	137	**140**	144	140	142	145	150	147	148	151	156
	3375	MBh	92.6	93.9	96.6	100.7	91.8	93.1	95.8	99.9	89.5	90.8	93.4	97.5	85.5	86.7	89.4	93.5	80.6	81.8	84.5	88.6	76.1	77.3	80.0	84.1
		S/T	0.92	0.86	0.69	0.53	0.95	0.89	0.72	0.52	0.99	0.89	0.75	0.59	1.00	0.94	0.77	0.61	1.00	0.98	0.80	0.63	1.00	1.00	0.81	0.68
		ΔT	24.32	22.60	19.38	16.0	24.27	22.55	19.33	16.0	24.51	22.79	19.57	16.2	24.25	22.53	19.31	16.0	24.02	22.30	19.08	15.8	25.10	23.38	20.16	16.8
		Hi PR	259	260	262	267	299	301	302	307	342	343	344	349	387	388	390	394	436	437	439	443	488	489	491	495
		Lo PR	119	120	123	128	126	127	130	135	132	133	136	141	137	139	141	146	142	144	147	151	149	150	153	158
85	2625	MBh	91.6	92.8	95.5	99.6	90.8	92.0	94.7	98.8	88.4	89.7	92.4	96.4	84.4	85.7	88.3	92.4	79.5	80.7	83.4	87.5	75.0	76.3	78.9	83.0
		S/T	0.91	0.88	0.80	0.64	0.95	0.90	0.81	0.70	0.96	0.92	0.84	0.71	1.00	0.96	0.86	0.71	1.00	1.00	0.91	0.72	1.00	1.00	0.91	0.74
		ΔT	29.62	27.90	24.68	21.3	29.57	27.85	24.63	21.3	29.82	28.09	24.87	21.5	29.56	27.83	24.61	21.3	29.33	27.60	24.38	21.1	30.40	28.68	25.46	22.1
		Hi PR	256	257	259	264	296	298	299	304	338	340	341	346	384	385	387	391	433	434	435	440	485	486	488	492
		Lo PR	117	118	121	126	124	125	128	133	130	132	134	139	135	137	140	144	140	142	145	150	147	148	151	156
	3000	MBh	92.7	94.0	96.7	100.8	91.9	93.2	95.9	100.0	89.6	90.9	93.5	97.6	85.6	86.8	89.5	93.6	80.7	81.9	84.6	88.7	76.2	77.4	80.1	84.2
		S/T	0.94	0.88	0.81	0.68	0.96	0.92	0.83	0.71	0.97	0.94	0.85	0.72	1.00	0.97	0.88	0.73	1.00	1.00	0.92	0.74	1.00	1.00	0.92	0.77
		ΔT	28.58	26.86	23.64	20.3	28.53	26.81	23.59	20.3	28.77	27.05	23.83	20.5	28.51	26.79	23.57	20.2	28.28	26.56	23.34	20.0	29.36	27.64	24.42	21.1
		Hi PR	258	260	261	266	299	300	301	306	341	342	344	348	386	387	389	393	435	436	438	442	487	488	490	494
		Lo PR	119	120	123	128	126	127	130	135	132	133	136	141	137	138	141	146	142	143	146	151	148	150	153	158
	3375	MBh	94.1	95.4	98.1	102.2	93.3	94.6	97.3	101.4	91.0	92.3	94.9	99.0	87.0	88.2	90.9	95.0	82.1	83.3	86.0	90.1	77.6	78.8	81.5	85.6
		S/T	0.96	0.92	0.83	0.70	1.00	0.96	0.87	0.72	1.00	0.95	0.90	0.73	1.00	1.00	0.92	0.78	1.00	1.00	0.97	0.80	1.00	1.00	0.98	0.82
		ΔT	27.70	25.98	22.76	19.4	27.66	25.93	22.71	19.4	27.90	26.17	22.96	19.6	27.64	25.91	22.70	19.4	27.41	25.68	22.47	19.1	28.49	26.76	23.55	20.2
		Hi PR	261	262	263	268	301	302	304	308	343	344	346	350	388	389	391	395	437	438	440	444	489	490	492	496
		Lo PR	121	122	125	130	128	129	132	137	134	135	138	143	139	140	143	148	144	145	148	153	150	152	155	159

IDB: Entering Indoor Dry Bulb Temperature

Shaded area reflects AHRI (TVA) conditions

kW = Total system power

High and low pressures are measured at the liquid and suction access fittings.

Amps: Unit amps (comp.+ evaporator + condenser fan motors)

Design Subcooling, 16 - 19 °F @ the liquid access fitting connection ARI 95 test conditions. Design Superheat 8 - 12°F @ the compressor suction access fitting connection.

			Outdoor Ambient Temperature																							
			65				75				85				95				105				115			
			Entering Indoor Wet Bulb Temperature																							
IDB	Airflow	ID WB	59	63	67	71	59	63	67	71	59	63	67	71	59	63	67	71	59	63	67	71	59	63	67	71
70	2975	MBh	99.2	100.6	103.6	-	98.3	99.7	102.7	-	95.8	97.2	100.1	-	91.3	92.7	95.7	-	85.9	87.3	90.3	-	81.0	82.4	85.3	-
		S/T	0.70	0.58	0.41	-	0.72	0.61	0.41	-	0.74	0.61	0.42	-	0.76	0.63	0.44	-	0.79	0.66	0.45	-	0.80	0.67	0.46	-
		ΔT	17.61	15.94	12.82	-	17.56	15.89	12.77	-	17.80	16.13	13.01	-	17.55	15.88	12.75	-	17.32	15.65	12.53	-	18.37	16.70	13.58	-
		Hi PR	256	257	259	-	296	297	299	-	338	340	341	-	384	385	387	-	433	434	436	-	485	486	488	-
		Lo PR	111	112	115	-	118	119	122	-	123	125	128	-	128	130	133	-	133	135	137	-	139	141	144	-
	3200	MBh	100.0	101.4	104.3	-	99.1	100.5	103.4	-	96.5	97.9	100.9	-	92.1	93.5	96.4	-	86.7	88.1	91.0	-	81.7	83.1	86.1	-
		S/T	0.72	0.61	0.42	-	0.74	0.62	0.45	-	0.77	0.65	0.45	-	0.80	0.67	0.47	-	0.83	0.68	0.49	-	0.82	0.69	0.48	-
		ΔT	17.07	15.40	12.27	-	17.02	15.35	12.23	-	17.26	15.58	12.46	-	17.00	15.33	12.21	-	16.78	15.11	11.99	-	17.83	16.16	13.03	-
		Hi PR	257	258	260	-	297	299	300	-	340	341	343	-	385	386	388	-	434	435	437	-	486	487	489	-
		Lo PR	112	113	116	-	118	120	123	-	124	126	129	-	129	131	133	-	134	136	138	-	140	142	144	-
	3825	MBh	102.6	103.9	106.9	-	101.7	103.1	106.0	-	99.1	100.5	103.4	-	94.7	96.0	99.0	-	89.2	90.6	93.6	-	84.3	85.7	88.6	-
		S/T	0.74	0.63	0.44	-	0.76	0.64	0.47	-	0.79	0.67	0.47	-	0.82	0.69	0.49	-	0.85	0.70	0.51	-	0.85	0.72	0.52	-
		ΔT	15.78	14.11	10.99	-	15.74	14.07	10.95	-	15.97	14.30	11.18	-	15.72	14.05	10.93	-	15.50	13.83	10.70	-	16.54	14.87	11.75	-
		Hi PR	261	262	263	-	301	302	304	-	343	344	346	-	388	389	391	-	437	438	440	-	490	491	492	-
		Lo PR	115	116	119	-	121	123	126	-	127	129	131	-	132	134	136	-	137	138	141	-	143	145	147	-
75	2975	MBh	99.3	100.7	103.6	108.1	98.4	99.8	102.7	107.2	95.8	97.2	100.2	104.7	91.4	92.8	95.7	100.2	86.0	87.4	90.3	94.8	81.0	82.4	85.4	89.9
		S/T	0.78	0.68	0.52	0.35	0.83	0.74	0.55	0.37	0.84	0.71	0.56	0.38	0.86	0.73	0.57	0.45	0.89	0.75	0.59	0.47	0.91	0.77	0.66	0.46
		ΔT	21.29	19.61	16.49	13.3	21.24	19.57	16.45	13.2	21.48	19.80	16.68	13.4	21.22	19.55	16.43	13.2	21.00	19.33	16.21	13.0	22.05	20.37	17.25	14.0
		Hi PR	256	257	259	263.6	296	298	299	303.8	339	340	342	346.0	384	385	387	391.4	433	434	436	440.4	485	486	488	492.6
		Lo PR	111	112	115	119.7	118	119	122	126.4	123	125	128	132.3	128	130	133	137.3	133	135	137	142.1	139	141	144	148.2
	3200	MBh	100.0	101.4	104.4	108.9	99.2	100.6	103.5	108.0	96.6	98.0	100.9	105.4	92.1	**93.5**	96.5	101.0	86.7	88.1	91.1	95.6	81.8	83.2	86.1	90.6
		S/T	0.82	0.71	0.56	0.37	0.85	0.72	0.58	0.39	0.86	0.73	0.59	0.40	0.88	**0.74**	0.60	0.44	0.91	0.77	0.61	0.45	0.94	0.81	0.64	0.47
		ΔT	20.74	19.07	15.95	12.7	20.70	19.03	15.90	12.7	20.93	19.26	16.14	12.9	20.68	**19.01**	15.89	12.7	20.46	18.78	15.66	12.4	21.50	19.83	16.71	13.5
		Hi PR	257	259	260	265	298	299	301	305	340	341	343	347	385	**386**	388	393	434	435	437	442	486	488	489	494
		Lo PR	112	113	116	121	119	120	123	127	124	126	129	133	129	**131**	134	138	134	136	138	143	140	142	144	149
	3825	MBh	102.6	104.0	106.9	111.5	101.7	103.1	106.1	110.6	99.1	100.5	103.5	108.0	94.7	96.1	99.1	103.6	89.3	90.7	93.6	98.1	84.3	85.7	88.7	93.2
		S/T	0.84	0.73	0.58	0.40	0.87	0.74	0.62	0.42	0.88	0.75	0.61	0.44	0.90	0.76	0.62	0.46	0.93	0.80	0.64	0.47	0.96	0.83	0.66	0.48
		ΔT	19.46	17.79	14.67	11.4	19.41	17.74	14.62	11.4	19.65	17.98	14.86	11.6	19.40	17.73	14.60	11.4	19.17	17.50	14.38	11.1	20.22	18.55	15.43	12.2
		Hi PR	261	262	264	268	301	302	304	308	343	344	346	351	389	390	391	396	438	439	440	445	490	491	493	497
		Lo PR	115	116	119	124	121	123	126	130	127	129	131	136	132	134	136	141	137	138	141	146	143	145	147	152

IDB: Entering Indoor Dry Bulb Temperature

Shaded area reflects ACCA (TVA) conditions

kW = Total system power

High and low pressures are measured at the liquid and suction access fittings.

Amps: Unit amps (comp.+ evaporator + condenser fan motors)

Design Subcooling, 16 - 19 °F @ the liquid access fitting connection ARI 95 test conditions. Design Superheat 8 - 12°F @ the compressor suction access fitting connection.

			Outdoor Ambient Temperature																							
			65				75				85				95				105				115			
			Entering Indoor Wet Bulb Temperature																							
IDB	Airflow	ID WB	59	63	67	71	59	63	67	71	59	63	67	71	59	63	67	71	59	63	67	71	59	63	67	71
80	2975	MBh	99.8	101.2	104.1	108.6	98.9	100.3	103.3	107.8	96.3	97.7	100.7	105.2	91.9	93.3	96.2	100.7	86.5	87.9	90.8	95.3	81.5	82.9	85.9	90.4
		S/T	0.86	0.81	0.67	0.50	0.90	0.85	0.68	0.53	0.92	0.86	0.70	0.53	0.95	0.89	0.72	0.55	1.00	0.92	0.75	0.56	1.00	0.94	0.76	0.57
		ΔT	24.99	23.31	20.19	17.0	24.94	23.27	20.15	16.9	25.18	23.50	20.38	17.1	24.92	23.25	20.13	16.9	24.70	23.03	19.91	16.7	25.75	24.08	20.95	17.7
		Hi PR	257	258	260	264	297	298	300	304	339	340	342	346	385	386	387	392	433	435	436	441	486	487	489	493
		Lo PR	111	113	116	120	118	119	122	127	124	125	128	133	129	130	133	138	134	135	138	143	140	141	144	149
	3200	MBh	100.6	101.9	104.9	109.4	99.7	101.1	104.0	108.5	97.1	98.5	101.4	105.9	92.7	94.1	**97.0**	101.5	87.2	88.6	91.6	96.1	82.3	83.7	86.6	91.1
		S/T	0.90	0.82	0.69	0.55	0.93	0.86	0.72	0.54	0.95	0.89	0.73	0.55	0.98	0.91	**0.74**	0.56	1.00	0.95	0.78	0.58	1.00	0.97	0.78	0.60
		ΔT	24.44	22.77	19.65	16.4	24.40	22.73	19.60	16.4	24.63	22.96	19.84	16.6	24.38	22.71	**19.59**	16.4	24.16	22.49	19.36	16.1	25.20	23.53	20.41	17.2
		Hi PR	258	259	261	265	298	299	301	306	340	341	343	348	386	387	**389**	393	435	436	438	442	487	488	490	494
		Lo PR	112	114	116	121	119	120	123	128	125	126	129	134	130	131	**134**	139	135	136	139	144	141	142	145	150
	3825	MBh	103.1	104.5	107.5	112.0	102.2	103.6	106.6	111.1	99.7	101.1	104.0	108.5	95.2	96.6	99.6	104.1	89.8	91.2	94.1	98.7	84.9	86.3	89.2	93.7
		S/T	0.94	0.84	0.73	0.59	0.95	0.88	0.75	0.57	0.97	0.91	0.76	0.57	1.00	0.93	0.78	0.58	1.00	0.97	0.80	0.60	1.00	0.99	0.81	0.62
		ΔT	23.16	21.49	18.37	15.1	23.11	21.44	18.32	15.1	23.35	21.68	18.56	15.3	23.10	21.43	18.30	15.1	22.87	21.20	18.08	14.8	23.92	22.25	19.13	15.9
		Hi PR	261	262	264	269	301	303	304	309	344	345	347	351	389	390	392	396	438	439	441	445	490	491	493	498
		Lo PR	115	117	119	124	122	123	126	131	128	129	132	137	133	134	137	142	138	139	142	146	144	145	148	153
85	2975	MBh	101.5	102.9	105.8	110.3	100.6	102.0	104.9	109.4	98.0	99.4	102.3	106.8	93.6	95.0	97.9	102.4	88.1	89.5	92.5	97.0	83.2	84.6	87.5	92.0
		S/T	0.91	0.87	0.80	0.64	0.95	0.91	0.82	0.66	0.96	0.93	0.85	0.66	0.96	0.93	0.85	0.68	0.98	0.96	0.90	0.73	1.00	0.98	0.89	0.74
		ΔT	28.27	26.60	23.48	20.2	28.22	26.55	23.43	20.2	28.46	26.79	23.67	20.4	28.21	26.53	23.41	20.2	27.98	26.31	23.19	20.0	29.03	27.36	24.24	21.0
		Hi PR	258	259	261	265	298	299	301	306	340	341	343	348	386	387	389	393	435	436	438	442	487	488	490	494
		Lo PR	113	114	117	122	120	121	124	129	126	127	130	134	131	132	135	139	135	137	140	144	142	143	146	150
	3200	MBh	102.2	103.6	106.6	111.1	101.3	102.7	105.7	110.2	98.8	100.1	103.1	107.6	94.3	95.7	98.7	103.2	88.9	90.3	93.2	97.7	84.0	85.3	88.3	92.8
		S/T	0.94	0.90	0.82	0.66	0.97	0.94	0.85	0.68	0.99	0.97	0.86	0.71	1.00	0.97	0.90	0.73	1.00	1.00	0.94	0.76	1.00	1.00	0.96	0.77
		ΔT	27.73	26.05	22.93	19.7	27.68	26.01	22.89	19.7	27.92	26.24	23.12	19.9	27.66	25.99	22.87	19.6	27.44	25.77	22.65	19.4	28.49	26.81	23.69	20.5
		Hi PR	259	260	262	266	299	300	302	307	342	343	344	349	387	388	390	394	436	437	439	443	488	489	491	495
		Lo PR	114	115	118	123	121	122	125	129	127	128	131	135	131	133	136	140	136	138	141	145	142	144	147	151
	3825	MBh	104.8	106.2	109.1	113.6	103.9	105.3	108.2	112.7	101.3	102.7	105.7	110.2	96.9	98.3	101.2	105.7	91.5	92.9	95.8	100.3	86.5	87.9	90.9	95.4
		S/T	0.93	0.92	0.84	0.66	0.99	0.96	0.87	0.70	1.00	0.99	0.88	0.73	1.00	1.00	0.92	0.75	1.00	1.00	0.96	0.77	1.00	1.00	0.98	0.73
		ΔT	26.44	24.77	21.65	18.4	26.40	24.73	21.60	18.4	26.63	24.96	21.84	18.6	26.38	24.71	21.59	18.4	26.16	24.48	21.36	18.1	27.20	25.53	22.41	19.2
		Hi PR	262	264	265	270	303	304	306	310	345	346	348	352	390	391	393	398	439	440	442	447	491	493	494	499
		Lo PR	117	118	121	126	124	125	128	132	129	131	134	138	134	136	139	143	139	141	143	148	145	147	150	154

IDB: Entering Indoor Dry Bulb Temperature

Shaded area reflects AHRI (TVA) conditions

kW = Total system power

High and low pressures are measured at the liquid and suction access fittings.

Amps: Unit amps (comp.+ evaporator + condenser fan motors)

Design Subcooling, 16 - 19 °F @ the liquid access fitting connection ARI 95 test conditions. Design Superheat 8 - 12°F @ the compressor suction access fitting connection.

			Outdoor Ambient Temperature																							
			65				75				85				95				105				115			
			Entering Indoor Wet Bulb Temperature																							
IDB	Airflow	ID WB	59	63	67	71	59	63	67	71	59	63	67	71	59	63	67	71	59	63	67	71	59	63	67	71
70	3150	MBh	118.6	120.3	123.8	-	117.6	119.2	122.8	-	114.5	116.2	119.7	-	109.2	110.8	114.4	-	102.7	104.4	107.9	-	96.8	98.5	102.0	-
		S/T	0.69	0.57	0.40	-	0.72	0.55	0.40	-	0.75	0.59	0.44	-	0.78	0.61	0.45	-	0.78	0.63	0.48	-	0.79	0.66	0.53	-
		ΔT	18.81	17.03	13.70	-	18.76	16.98	13.65	-	19.01	17.23	13.90	-	18.75	16.96	13.63	-	18.51	16.72	13.39	-	19.62	17.84	14.51	-
		Hi PR	265	266	268	-	306	307	309	-	350	351	353	-	397	398	400	-	447	448	450	-	501	502	504	-
		Lo PR	113	115	118	-	120	122	124	-	126	128	130	-	131	133	136	-	136	138	141	-	142	144	147	-
	3400	MBh	119.6	121.2	124.8	-	118.5	120.2	123.7	-	115.4	117.1	120.6	-	110.1	111.8	115.3	-	103.6	105.3	108.8	-	97.7	99.4	102.9	-
		S/T	0.71	0.58	0.44	-	0.73	0.57	0.44	-	0.74	0.60	0.47	-	0.77	0.62	0.49	-	0.81	0.64	0.51	-	0.82	0.69	0.56	-
		ΔT	18.20	16.42	13.09	-	18.16	16.37	13.04	-	18.41	16.62	13.29	-	18.14	16.35	13.03	-	17.90	16.12	12.79	-	19.02	17.23	13.90	-
		Hi PR	266	267	269	-	307	309	310	-	351	352	354	-	398	399	401	-	449	450	452	-	503	504	506	-
		Lo PR	114	116	119	-	121	123	125	-	127	129	131	-	132	134	137	-	137	139	141	-	143	145	148	-
	4050	MBh	122.6	124.2	127.8	-	121.5	123.2	126.7	-	118.4	120.1	123.6	-	113.1	114.8	118.3	-	106.6	108.3	111.8	-	100.7	102.4	105.9	-
		S/T	0.73	0.61	0.46	-	0.74	0.61	0.48	-	0.76	0.64	0.51	-	0.77	0.66	0.53	-	0.78	0.68	0.55	-	0.83	0.73	0.60	-
		ΔT	16.86	15.08	11.75	-	16.81	15.03	11.70	-	17.06	15.28	11.95	-	16.80	15.01	11.68	-	16.56	14.77	11.44	-	17.67	15.89	12.56	-
		Hi PR	269	270	272	-	311	312	314	-	354	356	357	-	401	402	404	-	452	453	455	-	506	507	509	-
		Lo PR	117	119	121	-	124	125	128	-	130	131	134	-	135	137	139	-	140	142	144	-	146	148	151	-
75	3150	MBh	118.7	120.4	123.9	129.3	117.6	119.3	122.8	128.2	114.6	116.2	119.7	125.1	109.3	110.9	114.4	119.8	102.8	104.4	108.0	113.3	96.9	98.5	102.0	107.4
		S/T	0.79	0.70	0.53	0.30	0.81	0.72	0.50	0.40	0.81	0.77	0.55	0.42	0.84	0.76	0.58	0.44	0.88	0.77	0.65	0.46	0.89	0.79	0.62	0.51
		ΔT	22.73	20.95	17.62	14.2	22.68	20.90	17.57	14.1	22.94	21.15	17.82	14.4	22.67	20.88	17.55	14.1	22.43	20.64	17.32	13.9	23.54	21.76	18.43	15.0
		Hi PR	265	266	268	272	306	308	309	314	350	351	353	358	397	398	400	405	448	449	451	455	502	503	505	509
		Lo PR	113	115	118	122	120	122	124	129	126	128	130	135	131	133	136	140	136	138	141	145	143	144	147	152
	3400	MBh	119.6	121.3	124.8	130.2	118.6	120.2	123.8	129.2	115.5	117.2	120.7	126.1	110.2	**111.9**	115.4	120.8	103.7	105.4	108.9	114.3	97.8	99.5	103.0	108.4
		S/T	0.81	0.72	0.56	0.42	0.83	0.75	0.57	0.4	0.83	0.79	0.59	0.45	0.86	**0.77**	0.61	0.5	0.91	0.82	0.69	0.49	0.93	0.84	0.67	0.54
		ΔT	22.13	20.34	17.01	13.6	22.08	20.29	16.96	13.5	22.33	20.54	17.21	13.8	22.06	**20.28**	16.95	13.5	21.82	20.04	16.71	13.3	22.94	21.15	17.82	14.4
		Hi PR	266	267	269	274	308	309	311	315	351	352	354	359	398	**399**	401	406	449	450	452	456	503	504	506	510
		Lo PR	114	116	119	123	121	123	125	130	127	129	131	136	132	**134**	137	141	137	139	142	146	143	145	148	153
	4050	MBh	122.6	124.3	127.8	133.2	121.6	123.2	126.8	132.2	118.5	120.2	123.7	129.1	113.2	114.9	118.4	123.8	106.7	108.4	111.9	117.3	100.8	102.5	106.0	111.4
		S/T	0.83	0.75	0.60	0.40	0.85	0.77	0.61	0.47	0.88	0.86	0.63	0.49	0.91	0.83	0.65	0.51	0.96	0.84	0.70	0.53	0.97	0.86	0.68	0.58
		ΔT	20.78	19.00	15.67	12.2	20.73	18.95	15.62	12.2	20.99	19.20	15.87	12.4	20.72	18.93	15.60	12.2	20.48	18.69	15.37	11.9	21.59	19.81	16.48	13.0
		Hi PR	269	271	272	277	311	312	314	319	355	356	358	362	402	403	405	409	452	453	455	460	506	507	509	514
		Lo PR	117	119	122	126	124	125	128	133	130	131	134	139	135	137	139	144	140	142	144	149	146	148	151	155

IDB: Entering Indoor Dry Bulb Temperature

Shaded area reflects ACCA (TVA) conditions

kW = Total system power

High and low pressures are measured at the liquid and suction access fittings.

Amps: Unit amps (comp.+ evaporator + condenser fan motors)

Design Subcooling, 16 - 19 °F @ the liquid access fitting connection ARI 95 test conditions. Design Superheat 8 - 12°F @ the compressor suction access fitting connection.

			Outdoor Ambient Temperature																							
			65				75				85				95				105				115			
			Entering Indoor Wet Bulb Temperature																							
IDB	Airflow	ID WB	59	63	67	71	59	63	67	71	59	63	67	71	59	63	67	71	59	63	67	71	59	63	67	71
80	3150	MBh	119.3	121.0	124.5	129.9	118.2	119.9	123.4	128.8	115.2	116.8	120.4	125.7	109.9	111.5	115.1	120.4	103.4	105.0	108.6	114.0	97.5	99.1	102.7	108.0
		S/T	0.87	0.79	0.65	0.51	0.90	0.83	0.66	0.52	0.92	0.85	0.68	0.54	0.94	0.87	0.70	0.56	0.97	0.91	0.75	0.58	1.00	0.96	0.77	0.63
		ΔT	26.68	24.90	21.57	18.1	26.63	24.85	21.52	18.1	26.88	25.10	21.77	18.3	26.61	24.83	21.50	18.1	26.38	24.59	21.26	17.8	27.49	25.71	22.38	18.9
		Hi PR	265	266	268	273	307	308	310	314	350	352	353	358	397	399	400	405	448	449	451	456	502	503	505	510
		Lo PR	114	115	118	123	121	122	125	130	127	128	131	136	132	133	136	141	137	138	141	146	143	144	147	152
	3400	MBh	120.2	121.9	125.4	130.8	119.2	120.9	124.4	129.8	116.1	117.8	121.3	126.7	110.8	112.5	**116.0**	121.4	104.3	106.0	109.5	114.9	98.4	100.1	103.6	109.0
		S/T	0.89	0.81	0.68	0.54	0.92	0.85	0.69	0.6	0.94	0.87	0.72	0.57	0.96	0.91	**0.73**	0.59	0.99	0.94	0.77	0.61	1.00	0.95	0.80	0.66
		ΔT	26.07	24.29	20.96	17.5	26.02	24.24	20.91	17.5	26.28	24.49	21.16	17.7	26.01	24.22	**20.89**	17.4	25.77	23.98	20.66	17.2	26.88	25.10	21.77	18.3
		Hi PR	267	268	270	274	308	309	311	316	352	353	355	359	399	400	**402**	406	449	450	452	457	503	504	506	511
		Lo PR	115	116	119	124	122	123	126	131	128	129	132	137	133	134	**137**	142	138	139	142	147	144	145	148	153
	4050	MBh	123.2	124.9	128.4	133.8	122.2	123.9	127.4	132.8	119.1	120.8	124.3	129.7	113.8	115.5	119.0	124.4	107.3	109.0	112.5	117.9	101.4	103.1	106.6	112.0
		S/T	0.92	0.84	0.72	0.58	0.94	0.87	0.73	0.59	0.96	0.88	0.75	0.62	0.98	0.90	0.77	0.6	1.00	0.96	0.79	0.65	1.00	1.00	0.84	0.70
		ΔT	24.73	22.95	19.62	16.2	24.68	22.90	19.57	16.1	24.93	23.15	19.82	16.4	24.66	22.88	19.55	16.1	24.43	22.64	19.31	15.9	25.54	23.76	20.43	17.0
		Hi PR	270	271	273	278	312	313	315	319	355	356	358	363	402	403	405	410	453	454	456	460	507	508	510	514
		Lo PR	118	119	122	127	125	126	129	134	131	132	135	140	136	137	140	145	141	142	145	150	147	148	151	156
85	3150	MBh	121.3	123.0	126.5	131.9	120.2	121.9	125.4	130.8	117.2	118.8	122.3	127.7	111.9	113.5	117.0	122.4	105.4	107.0	110.6	115.9	99.5	101.1	104.6	110.0
		S/T	0.90	0.86	0.76	0.62	0.93	0.88	0.78	0.6	0.95	0.93	0.85	0.67	1.00	0.95	0.85	0.68	1.00	0.98	0.87	0.72	1.00	0.99	0.89	0.7
		ΔT	30.18	28.40	25.07	21.6	30.13	28.35	25.02	21.6	30.38	28.60	25.27	21.8	30.11	28.33	25.00	21.6	29.88	28.09	24.76	21.3	30.99	29.21	25.88	22.4
		Hi PR	267	268	270	274	308	309	311	316	352	353	355	359	399	400	402	406	449	450	452	457	503	504	506	511
		Lo PR	116	117	120	125	122	124	127	131	128	130	133	137	133	135	138	143	138	140	143	148	145	146	149	154
	3400	MBh	122.2	123.9	127.4	132.8	121.2	122.8	126.4	131.8	118.1	119.8	123.3	128.7	112.8	114.5	118.0	123.4	106.3	108.0	111.5	116.9	100.4	102.1	105.6	111.0
		S/T	0.92	0.89	0.80	0.66	0.95	0.92	0.82	0.67	0.97	0.94	0.85	0.69	1.00	0.98	0.88	0.72	1.00	1.00	0.90	0.75	1.00	1.00	0.92	0.76
		ΔT	29.57	27.79	24.46	21.0	29.53	27.74	24.41	21.0	29.78	27.99	24.66	21.2	29.51	27.72	24.39	20.9	29.27	27.49	24.16	20.7	30.39	28.60	25.27	21.8
		Hi PR	268	269	271	275	309	311	312	317	353	354	356	361	400	401	403	408	451	452	454	458	505	506	508	512
		Lo PR	117	118	121	126	123	125	128	132	129	131	134	138	134	136	139	144	139	141	144	149	146	147	150	155
	4050	MBh	125.2	126.9	130.4	135.8	124.2	125.8	129.4	134.8	121.1	122.8	126.3	131.7	115.8	117.5	121.0	126.4	109.3	111.0	114.5	119.9	103.4	105.1	108.6	114.0
		S/T	0.96	0.91	0.83	0.68	0.97	0.94	0.84	0.70	1.00	0.96	0.87	0.71	1.00	1.00	0.90	0.74	1.00	1.00	0.92	0.76	1.00	1.00	0.94	0.80
		ΔT	28.23	26.45	23.12	19.7	28.18	26.40	23.07	19.6	28.43	26.65	23.32	19.9	28.17	26.38	23.05	19.6	27.93	26.14	22.81	19.4	29.04	27.26	23.93	20.5
		Hi PR	271	272	274	279	313	314	316	320	356	358	359	364	403	404	406	411	454	455	457	461	508	509	511	515
		Lo PR	119	121	124	128	126	128	131	135	132	134	137	141	137	139	142	146	142	144	147	151	149	150	153	158

IDB: Entering Indoor Dry Bulb Temperature

Shaded area reflects AHRI (TVA) conditions

kW = Total system power

High and low pressures are measured at the liquid and suction access fittings.

Amps: Unit amps (comp.+ evaporator + condenser fan motors)

Design Subcooling, 16 - 19 °F @ the liquid access fitting connection ARI 95 test conditions. Design Superheat 8 - 12°F @ the compressor suction access fitting connection.

			Outdoor Ambient Temperature																							
			65				75				85				95				105				115			
			Entering Indoor Wet Bulb Temperature																							
IDB	Airflow	ID WB	59	63	67	71	59	63	67	71	59	63	67	71	59	63	67	71	59	63	67	71	59	63	67	71
70	3850	MBh	143.0	145.0	149.3	-	141.7	143.8	148.0	-	138.0	140.0	144.3	-	131.6	133.6	137.9	-	123.8	125.8	130.1	-	116.7	118.7	122.9	-
		S/T	0.64	0.53	0.37	-	0.66	0.55	0.37	-	0.68	0.57	0.38	-	0.71	0.59	0.40	-	0.73	0.62	0.41	-	0.75	0.63	0.42	-
		ΔT	19.08	17.28	13.92	-	19.03	17.23	13.87	-	19.28	17.48	14.12	-	19.01	17.21	13.85	-	18.77	16.97	13.61	-	19.90	18.10	14.74	-
		Hi PR	264	266	267	-	306	307	309	-	350	351	353	-	397	398	400	-	447	448	450	-	501	502	504	-
		Lo PR	115	116	119	-	122	123	126	-	128	129	132	-	133	134	137	-	138	140	142	-	144	146	149	-
	4200	MBh	144.3	146.3	150.6	-	143.0	145.0	149.3	-	139.3	141.3	145.6	-	132.9	134.9	139.2	-	125.1	127.1	131.4	-	118.0	120.0	124.2	-
		S/T	0.65	0.56	0.42	-	0.67	0.58	0.43	-	0.69	0.60	0.44	-	0.72	0.62	0.46	-	0.74	0.65	0.47	-	0.76	0.66	0.48	-
		ΔT	18.38	16.58	13.22	-	18.33	16.53	13.17	-	18.58	16.78	13.42	-	18.31	16.51	13.15	-	18.07	16.27	12.91	-	19.20	17.40	14.04	-
		Hi PR	266	267	269	-	307	309	310	-	351	352	354	-	398	399	401	-	449	450	452	-	503	504	506	-
		Lo PR	116	117	120	-	123	124	127	-	129	130	133	-	134	136	139	-	139	141	144	-	146	147	150	-
	4950	MBh	147.6	149.7	153.9	-	146.4	148.4	152.6	-	142.7	144.7	148.9	-	136.3	138.3	142.5	-	128.4	130.4	134.7	-	121.3	123.3	127.6	-
		S/T	0.67	0.58	0.44	-	0.69	0.60	0.45	-	0.71	0.62	0.51	-	0.74	0.64	0.48	-	0.76	0.67	0.49	-	0.78	0.68	0.50	-
		ΔT	17.11	15.31	11.94	-	17.06	15.26	11.90	-	17.31	15.51	12.15	-	17.04	15.24	11.88	-	16.80	15.00	11.64	-	17.93	16.13	12.76	-
		Hi PR	269	270	272	-	311	312	314	-	354	355	357	-	401	402	404	-	452	453	455	-	506	507	509	-
		Lo PR	119	120	123	-	126	127	130	-	132	133	136	-	137	138	141	-	142	143	146	-	148	150	153	-
75	3850	MBh	143.1	145.1	149.4	155.9	141.8	143.8	148.1	154.6	138.1	140.1	144.4	150.9	131.7	133.7	138.0	144.5	123.9	125.9	130.2	136.7	116.8	118.8	123.0	129.5
		S/T	0.73	0.66	0.53	0.3	0.76	0.69	0.52	0.3	0.78	0.69	0.55	0.4	0.84	0.72	0.57	0.4	0.86	0.74	0.62	0.5	0.90	0.77	0.64	0.5
		ΔT	23.04	21.24	17.88	14.4	22.99	21.19	17.83	14.3	23.24	21.44	18.08	14.6	22.97	21.17	17.81	14.3	22.73	20.93	17.57	14.1	23.86	22.06	18.70	15.2
		Hi PR	265	266	268	272	306	307	309	314	350	351	353	357	397	398	400	404	447	449	450	455	501	503	504	509
		Lo PR	115	116	119	124	122	123	126	131	128	129	132	137	133	135	137	142	138	140	142	147	144	146	149	154
	4200	MBh	144.4	146.4	150.7	157.2	143.1	145.1	149.4	155.9	139.4	141.4	145.7	152.2	133.0	**135.0**	139.3	145.8	125.2	127.2	131.4	137.9	118.0	120.0	124.3	130.8
		S/T	0.72	0.66	0.54	0.33	0.75	0.69	0.56	0.34	0.77	0.72	0.54	0.35	0.80	**0.73**	0.60	0.39	0.82	0.76	0.64	0.41	0.90	0.84	0.67	0.43
		ΔT	22.34	20.54	17.18	13.7	22.29	20.49	17.13	13.6	22.54	20.74	17.38	13.9	22.27	**20.47**	17.11	13.6	22.03	20.23	16.87	13.4	23.16	21.36	18.00	14.5
		Hi PR	266	267	269	274	308	309	311	315	351	352	354	359	398	**399**	401	406	449	450	452	456	503	504	506	510
		Lo PR	116	117	120	125	123	124	127	132	129	130	133	138	134	**136**	139	143	139	141	144	148	146	147	150	155
	4950	MBh	147.7	149.7	154.0	160.5	146.5	148.5	152.7	159.2	142.7	144.8	149.0	155.5	136.3	138.4	142.6	149.1	128.5	130.5	134.8	141.3	121.4	123.4	127.6	134.1
		S/T	0.74	0.69	0.57	0.4	0.77	0.71	0.58	0.4	0.80	0.75	0.57	0.4	0.82	0.77	0.61	0.4	0.85	0.79	0.67	0.4	0.92	0.87	0.69	0.5
		ΔT	21.07	19.26	15.90	12.4	21.02	19.22	15.85	12.4	21.27	19.47	16.11	12.6	21.00	19.20	15.84	12.4	20.76	18.96	15.60	12.1	21.88	20.08	16.72	13.2
		Hi PR	269	270	272	277	311	312	314	318	354	356	357	362	401	402	404	409	452	453	455	460	506	507	509	514
		Lo PR	119	120	123	128	126	127	130	135	132	133	136	141	137	138	141	146	142	143	146	151	148	150	153	158

IDB: Entering Indoor Dry Bulb Temperature

Shaded area reflects ACCA (TVA) conditions

kW = Total system power

High and low pressures are measured at the liquid and suction access fittings.

Amps: Unit amps (comp.+ evaporator + condenser fan motors)

Design Subcooling, 16 - 19 °F @ the liquid access fitting connection ARI 95 test conditions. Design Superheat 8 - 12°F @ the compressor suction access fitting connection.

			Outdoor Ambient Temperature																							
			65				75				85				95				105				115			
			Entering Indoor Wet Bulb Temperature																							
IDB	Airflow	ID WB	59	63	67	71	59	63	67	71	59	63	67	71	59	63	67	71	59	63	67	71	59	63	67	71
80	3850	MBh	143.8	145.9	150.1	156.6	142.6	144.6	148.8	155.3	138.8	140.9	145.1	151.6	132.4	134.5	138.7	145.2	124.6	126.6	130.9	137.4	117.5	119.5	123.8	130.3
		S/T	80.00	0.75	0.62	0.5	0.83	0.79	0.66	0.5	0.85	0.81	0.65	0.5	0.87	0.82	0.67	0.5	0.92	0.86	0.72	0.5	0.99	0.93	0.77	0.6
		ΔT	27.02	25.22	21.86	18.4	26.98	25.17	21.81	18.3	27.23	25.43	22.07	18.6	26.96	25.16	21.79	18.3	26.72	24.92	21.55	18.1	27.84	26.04	22.68	19.2
		Hi PR	265	266	268	273	307	308	310	314	350	351	353	358	397	398	400	405	448	449	451	455	502	503	505	509
		Lo PR	115	117	120	125	122	124	127	132	128	130	133	138	134	135	138	143	139	140	143	148	145	146	149	154
	4200	MBh	145.1	147.1	151.4	157.9	143.9	145.9	150.1	156.6	140.1	142.1	146.4	152.9	133.7	135.7	**140.0**	146.5	125.9	127.9	132.2	138.7	118.8	120.8	125.0	131.5
		S/T	0.82	0.77	0.62	0.45	0.85	0.79	0.64	0.48	0.88	0.81	0.66	0.51	0.91	0.73	**0.71**	0.54	0.95	0.90	0.74	0.56	1.00	0.97	0.80	0.61
		ΔT	26.32	24.52	21.16	17.7	26.27	24.47	21.11	17.6	26.53	24.73	21.37	17.9	26.26	24.46	**21.09**	17.6	26.02	24.22	20.85	17.4	27.14	25.34	21.98	18.5
		Hi PR	267	268	270	274	308	309	311	316	352	353	355	359	399	400	**402**	406	449	450	452	457	503	504	506	511
		Lo PR	117	118	121	126	123	125	128	133	130	131	134	139	135	136	**139**	144	140	141	144	149	146	148	150	155
	4950	MBh	148.5	150.5	154.7	161.2	147.2	149.2	153.5	160.0	143.5	145.5	149.7	156.2	137.1	139.1	143.3	149.8	129.3	131.3	135.5	142.0	122.1	124.1	128.4	134.9
		S/T	0.84	0.79	0.65	0.5	0.87	0.83	0.67	0.5	0.90	0.83	0.68	0.5	0.93	0.76	0.73	0.6	0.97	0.93	0.77	0.6	1.00	1.00	0.85	0.6
		ΔT	25.05	23.25	19.89	16.4	25.00	23.20	19.84	16.4	25.25	23.45	20.09	16.6	24.98	23.18	19.82	16.3	24.74	22.94	19.58	16.1	25.87	24.07	20.71	17.2
		Hi PR	270	271	273	277	311	312	314	319	355	356	358	362	402	403	405	409	452	454	455	460	506	508	509	514
		Lo PR	119	121	124	128	126	128	131	135	132	134	137	142	137	139	142	147	143	144	147	152	149	150	153	158
85	3850	MBh	146.2	148.3	152.5	159.0	145.0	147.0	151.2	157.7	141.2	143.3	147.5	154.0	134.8	136.9	141.1	147.6	127.0	129.0	133.3	139.8	119.9	121.9	126.2	132.7
		S/T	0.82	0.79	0.72	0.6	0.85	0.82	0.74	0.6	0.89	0.86	0.76	0.6	0.90	0.86	0.78	0.6	0.93	0.90	0.82	0.7	0.94	0.93	0.83	0.7
		ΔT	30.56	28.76	25.40	21.9	30.51	28.71	25.35	21.9	30.76	28.96	25.60	22.1	30.49	28.69	25.33	21.8	30.25	28.45	25.09	21.6	31.38	29.58	26.22	22.7
		Hi PR	266	268	269	274	308	309	311	316	352	353	355	359	398	400	401	406	449	450	452	457	503	504	506	511
		Lo PR	117	119	121	126	124	125	128	133	130	132	134	139	135	137	140	145	140	142	145	150	147	148	151	156
	4200	MBh	147.5	149.5	153.8	160.3	146.3	148.3	152.5	159.0	142.5	144.5	148.8	155.3	136.1	138.1	142.4	148.9	128.3	130.3	134.6	141.1	121.2	123.2	127.4	133.9
		S/T	0.87	0.85	0.76	0.62	0.91	0.88	0.79	0.65	0.93	0.91	0.82	0.66	0.96	0.93	0.84	0.68	1.00	0.96	0.87	0.71	1.00	1.00	0.95	0.78
		ΔT	29.86	28.06	24.70	21.2	29.81	28.01	24.65	21.2	30.06	28.26	24.90	21.4	29.79	27.99	24.63	21.1	29.55	27.75	24.39	20.9	30.68	28.88	25.52	22.0
		Hi PR	268	269	271	275.4	309	311	312	317.0	353	354	356	360.6	400	401	403	407.6	451	452	454	458.2	505	506	508	512.2
		Lo PR	118	120	123	127.4	125	127	130	134.4	131	133	136	140.5	136	138	141	145.6	142	143	146	150.7	148	149	152	157.0
	4950	MBh	150.9	152.9	157.1	163.6	149.6	151.6	155.9	162.4	145.9	147.9	152.1	158.6	139.5	141.5	145.7	152.2	131.7	133.7	137.9	144.4	124.5	126.5	130.8	137.3
		S/T	0.89	0.87	0.78	0.6	0.93	0.90	0.81	0.7	0.95	0.93	0.85	0.7	0.98	0.95	0.86	0.7	1.00	0.98	0.89	0.7	1.00	1.00	0.97	0.8
		ΔT	28.59	26.78	23.42	19.9	28.54	26.74	23.37	19.9	28.79	26.99	23.63	20.1	28.52	26.72	23.36	19.9	28.28	26.48	23.12	19.6	29.40	27.60	24.24	20.8
		Hi PR	271	272	274	279	313	314	316	320	356	357	359	364	403	404	406	411	454	455	457	461	508	509	511	515
		Lo PR	121	122	125	130	128	129	132	137	134	135	138	143	139	141	144	148	144	146	149	153	151	152	155	160

IDB: Entering Indoor Dry Bulb Temperature

Shaded area reflects AHRI (TVA) conditions

kW = Total system power

High and low pressures are measured at the liquid and suction access fittings.

Amps: Unit amps (comp.+ evaporator + condenser fan motors)

Design Subcooling, 16 - 19 °F @ the liquid access fitting connection ARI 95 test conditions. Design Superheat 8 - 12°F @ the compressor suction access fitting connection.

Heating Rating Table - Natural Gas and Propane[1]

UNIT	Rated High Input (MBH)	Gas Heat	Input/Output (MBH)	Temp Rise High (ºF)	Temp Rise Low (ºF)	Thermal Efficiency (T.E.)	Recommended Minimum Airlflow (SCFM)	Recommended Maximum Airflow (SCFM)
DFG090	130	High	130/105.3	25 - 55		81%	1765	3882
		Low	97.5/79		25-55		1323	2912
	180	High	180/145.8	25 - 55		81%	2443	5375
		Low	135/109.35		25-55		1832	4031
	225	High	225/182.25	30 - 60		81%	2800	5599
		Low	168.75/136.69		30 - 60		2099	4199
DFG102	130	High	130/105.3	25 - 55		81%	1765	3882
		Low	97.5/79		25-55		1323	2912
	180	High	180/145.8	25 - 55		81%	2443	5375
		Low	135/109.35		25-55		1832	4031
	225	High	225/182.25	30 - 60		81%	2800	5599
		Low	168.75/136.69		30 - 60		2099	4199
DFG120	130	High	130/105.3	25 - 55		81%	1765	3882
		Low	97.5/79		25-55		1323	2912
	180	High	180/145.8	25 - 55		81%	2443	5375
		Low	135/109.35		25-55		1832	4031
	240	High	240/194.4	30 - 60		81%	2986	5972
		Low	180/145.8		30 - 60		2240	4479
DFG150	130	High	130/105.3	25 - 55		81%	1765	3882
		Low	97.5/79		25-55		1323	2912
	180	High	180/145.8	25 - 55		81%	2443	5375
		Low	135/109.35		25-55		1832	4031
	240	High	240/194.4	30 - 60		81%	2986	5972
		Low	180/145.8		30 - 60		2240	4479

[1]LP High Fire Rate is Reduced 10% that of Natural Gas

7.5 Ton Fan Data • 130 MBH Gas Heat Exchange • Models: DFG0903D, DFG0904D, DFG0907D

Down Flow				
Speed Tap	**ESP**	**CFM**	**RPM**	**BHP**
T1	0.2	2085	507	0.33
	0.4	1908	574	0.38
	0.6	1720	641	0.42
	0.8	1550	687	0.45
T2	0.2	2159	518	0.37
	0.4	1983	583	0.41
	0.6	1801	648	0.46
	0.8	1636	694	0.49
T3	0.2	3030	645	0.85
	0.4	2877	695	0.92
	0.6	2739	744	0.98
	0.8	2627	782	1.03
T4	0.2	3291	684	1.05
	0.4	3146	730	1.12
	0.6	3018	774	1.19
	0.8	2917	811	1.25
T5	0.2	3374	696	1.12
	0.4	3231	741	1.19
	0.6	3106	784	1.26
	0.8	3008	821	1.32
T6	0.2	1625	441	0.16
	0.4	-	-	-
	0.6	-	-	-
	0.8	-	-	-
T7	0.2	1972	491	0.18
	0.4	1792	560	0.21
	0.6	1598	629	0.23
	0.8	-	-	-
T8	0.2	2304	539	0.43
	0.4	2132	602	0.48
	0.6	1958	664	0.53
	0.8	1803	708	0.57
T9	0.2	3291	684	1.05
	0.4	3146	730	1.12
	0.6	3018	774	1.19
	0.8	2917	811	1.25
T10	0.2	3374	696	1.12
	0.4	3231	741	1.19
	0.6	3106	784	1.26
	0.8	3008	821	1.32

Horizontal Flow				
Speed Tap	**ESP**	**CFM**	**RPM**	**BHP**
T1	0.2	2077	498	0.33
	0.4	1910	563	0.37
	0.6	1716	630	0.41
	0.8	-	-	-
T2	0.2	2152	508	0.36
	0.4	1986	572	0.40
	0.6	1797	638	0.45
	0.8	1531	716	0.51
T3	0.2	3035	632	0.84
	0.4	2892	682	0.90
	0.6	2752	732	0.97
	0.8	2609	784	1.04
T4	0.2	3300	670	1.03
	0.4	3164	717	1.10
	0.6	3036	762	1.17
	0.8	2922	807	1.24
T5	0.2	3384	683	1.10
	0.4	3250	728	1.17
	0.6	3126	772	1.24
	0.8	3019	815	1.31
T6	0.2	1610	433	0.16
	0.4	-	-	-
	0.6	-	-	-
	0.8	-	-	-
T7	0.2	1962	482	0.18
	0.4	1792	549	0.21
	0.6	1591	618	0.23
	0.8	-	-	-
T8	0.2	2299	528	0.42
	0.4	2137	590	0.47
	0.6	1957	653	0.52
	0.8	1714	727	0.58
T9	0.2	3300	670	1.03
	0.4	3164	717	1.10
	0.6	3036	762	1.17
	0.8	2922	807	1.24
T10	0.2	3384	683	1.10
	0.4	3250	728	1.17
	0.6	3126	772	1.24
	0.8	3019	815	1.31

7.5 Ton Fan Data • 130 MBH Gas Heat Exchange • Models: DFG0903L, DFG0904L, DFG0907L

Down Flow				
Speed Tap	ESP	CFM	RPM	BHP
T1	0.2	2159	518	0.37
	0.4	1983	583	0.41
	0.6	1801	648	0.46
	0.8	1636	694	0.49
	1	-	-	-
	1.2	-	-	-
	1.4	-	-	-
T2	0.2	2410	554	0.48
	0.4	2241	615	0.54
	0.6	2072	675	0.59
	0.8	1925	718	0.63
	1	1733	777	0.68
	1.2	1530	832	0.72
	1.4	-	-	-
T3	0.2	3363	695	1.11
	0.4	3220	740	1.18
	0.6	3095	783	1.25
	0.8	2996	820	1.31
	1	2871	866	1.38
	1.2	2732	907	1.45
	1.4	2532	966	1.54
T4	0.2	3622	734	1.35
	0.4	3487	775	1.42
	0.6	3369	815	1.50
	0.8	3278	851	1.56
	1	3164	893	1.64
	1.2	3040	932	1.71
	1.4	2859	987	1.81
T5	0.2	3749	753	1.47
	0.4	3618	793	1.55
	0.6	3502	832	1.63
	0.8	3412	867	1.70
	1	3302	908	1.78
	1.2	3184	946	1.85
	1.4	3015	998	1.95
T6	0.2	1934	485	0.27
	0.4	1753	555	0.31
	0.6	1556	625	0.35
	0.8	-	-	-
	1	-	-	-
	1.2	-	-	-
	1.4	-	-	-
T7	0.2	2268	534	0.41
	0.4	2095	597	0.46
	0.6	1919	660	0.51
	0.8	1762	704	0.55
	1	1557	765	0.59
	1.2	-	-	-
	1.4	-	-	-
T8	0.2	2582	579	0.57
	0.4	2417	637	0.63
	0.6	2258	693	0.69
	0.8	2121	735	0.73
	1	1944	792	0.78
	1.2	1753	844	0.84
	1.4	1507	912	0.90
T9	0.2	3622	734	1.35
	0.4	3487	775	1.42
	0.6	3369	815	1.50
	0.8	3278	851	1.56
	1	3164	893	1.64
	1.2	3040	932	1.71
	1.4	2859	987	1.81
T10	0.2	3749	753	1.47
	0.4	3618	793	1.55
	0.6	3502	832	1.63
	0.8	3412	867	1.70
	1	3302	908	1.78
	1.2	3184	946	1.85
	1.4	3015	998	1.95

Horizontal Flow				
Speed Tap	ESP	CFM	RPM	BHP
T1	0.2	2152	508	0.36
	0.4	1987	572	0.40
	0.6	1797	638	0.45
	0.8	1531	716	0.51
	1	-	-	-
	1.2	-	-	-
	1.4	-	-	-
T2	0.2	2406	543	0.47
	0.4	2246	603	0.53
	0.6	2072	664	0.58
	0.8	1846	734	0.64
	1	1628	802	0.70
	1.2	-	-	-
	1.4	-	-	-
T3	0.2	3370	681	1.09
	0.4	3236	726	1.16
	0.6	3111	770	1.23
	0.8	3005	814	1.30
	1	2865	860	1.37
	1.2	2742	904	1.44
	1.4	2547	964	1.54
T4	0.2	3635	720	1.32
	0.4	3509	762	1.40
	0.6	3394	802	1.47
	0.8	3306	841	1.54
	1	3184	882	1.62
	1.2	3070	924	1.69
	1.4	2901	971	1.78
T5	0.2	3763	739	1.45
	0.4	3641	779	1.53
	0.6	3530	818	1.60
	0.8	3448	855	1.67
	1	3333	894	1.75
	1.2	3223	935	1.83
	1.4	3066	977	1.91
T6	0.2	1926	477	0.27
	0.4	1754	545	0.31
	0.6	1551	614	0.35
	0.8	-	-	-
	1	-	-	-
	1.2	-	-	-
	1.4	-	-	-
T7	0.2	2262	523	0.41
	0.4	2099	586	0.45
	0.6	1917	649	0.50
	0.8	1668	724	0.56
	1	-	-	-
	1.2	-	-	-
	1.4	-	-	-
T8	0.2	2579	568	0.56
	0.4	2424	625	0.62
	0.6	2260	682	0.68
	0.8	2060	747	0.74
	1	1857	810	0.80
	1.2	1697	857	0.85
	1.4	-	-	-
T9	0.2	3635	720	1.32
	0.4	3509	762	1.40
	0.6	3394	802	1.47
	0.8	3306	841	1.54
	1	3184	882	1.62
	1.2	3070	924	1.69
	1.4	2901	971	1.78
T10	0.2	3763	739	1.45
	0.4	3641	779	1.53
	0.6	3530	818	1.60
	0.8	3448	855	1.67
	1	3333	894	1.75
	1.2	3223	935	1.83
	1.4	3066	977	1.91

7.5 Ton Fan Data • 130 MBH Gas Heat Exchange • Models: DFG0903W, DFG0904W, DFG0907W

Down Flow				
Speed Tap	ESP	CFM	RPM	BHP
T1	0.2	2304	539	0.43
	0.4	2132	602	0.48
	0.6	1958	664	0.53
	0.8	1803	708	0.57
	1	1602	768	0.61
	1.2	-	-	-
	1.4	-	-	-
	1.6	-	-	-
	1.8	-	-	-
T2	0.2	2514	569	0.54
	0.4	2347	628	0.59
	0.6	2185	686	0.65
	0.8	2044	728	0.69
	1	1861	786	0.74
	1.2	1665	839	0.79
	1.4	-	-	-
	1.6	-	-	-
	1.8	-	-	-
T3	0.2	3614	732	1.34
	0.4	3478	774	1.41
	0.6	3359	814	1.49
	0.8	3267	850	1.55
	1	3153	893	1.63
	1.2	3028	932	1.70
	1.4	2848	986	1.80
	1.6	2715	1024	1.87
	1.8	2562	1072	1.96
T4	0.2	3847	768	1.58
	0.4	3719	808	1.66
	0.6	3604	845	1.74
	0.8	3514	880	1.81
	1	3406	920	1.89
	1.2	3293	957	1.97
	1.4	3133	1007	2.07
	1.6	3008	1042	2.14
	1.8	2866	1089	2.24
T5	0.2	3957	785	1.71
	0.4	3833	824	1.79
	0.6	3718	860	1.87
	0.8	3627	896	1.95
	1	3521	935	2.03
	1.2	3412	971	2.11
	1.4	3265	1017	2.21
	1.6	3144	1052	2.29
	1.8	3008	1097	2.39
T6	0.2	2232	528	0.40
	0.4	2058	593	0.45
	0.6	1879	656	0.49
	0.8	1720	701	0.53
	1	1512	762	0.57
	1.2	-	-	-
	1.4	-	-	-
	1.6	-	-	-
	1.8	-	-	-

Horizontal Flow				
Speed Tap	ESP	CFM	RPM	BHP
T1	0.2	2299	528	0.42
	0.4	2137	590	0.47
	0.6	1956	653	0.52
	0.8	1713	727	0.58
	1	-	-	-
	1.2	-	-	-
	1.4	-	-	-
	1.6	-	-	-
	1.8	-	-	-
T2	0.2	2510	558	0.53
	0.4	2354	616	0.58
	0.6	2186	675	0.64
	0.8	1976	742	0.70
	1	1767	807	0.76
	1.2	1603	854	0.81
	1.4	-	-	-
	1.6	-	-	-
	1.8	-	-	-
T3	0.2	3625	719	1.31
	0.4	3499	760	1.39
	0.6	3383	801	1.46
	0.8	3295	840	1.53
	1	3172	881	1.61
	1.2	3058	923	1.68
	1.4	2887	971	1.77
	1.6	2771	1010	1.84
	1.8	2613	1061	1.94
T4	0.2	3847	768	1.58
	0.4	3719	808	1.66
	0.6	3604	845	1.74
	0.8	3514	880	1.81
	1	3406	920	1.89
	1.2	3293	957	1.97
	1.4	3133	1007	2.07
	1.6	3008	1042	2.14
	1.8	2866	1089	2.24
T5	0.2	3973	771	1.68
	0.4	3857	809	1.76
	0.6	3752	845	1.84
	0.8	3673	880	1.91
	1	3568	916	1.99
	1.2	3463	955	2.08
	1.4	3328	991	2.16
	1.6	3228	1028	2.24
	1.8	3082	1078	2.35
T6	0.2	2226	518	0.39
	0.4	2062	581	0.44
	0.6	1877	645	0.49
	0.8	1623	721	0.54
	1	-	-	-
	1.2	-	-	-
	1.4	-	-	-
	1.6	-	-	-
	1.8	-	-	-

Down Flow				
Speed Tap	ESP	CFM	RPM	BHP
T7	0.2	2682	594	0.63
	0.4	2520	650	0.69
	0.6	2366	704	0.75
	0.8	2235	745	0.79
	1	2066	800	0.85
	1.2	1882	851	0.90
	1.4	1641	918	0.97
	1.6	-	-	-
	1.8	-	-	-
T8	0.2	3090	654	0.90
	0.4	2938	703	0.96
	0.6	2803	751	1.03
	0.8	2694	789	1.08
	1	2553	838	1.15
	1.2	2397	883	1.21
	1.4	2179	946	1.29
	1.6	2029	990	1.36
	1.8	1860	1039	1.42
T9	0.2	3847	768	1.58
	0.4	3719	808	1.66
	0.6	3604	845	1.74
	0.8	3514	880	1.81
	1	3406	920	1.89
	1.2	3293	957	1.97
	1.4	3133	1007	2.07
	1.6	3008	1042	2.14
	1.8	2866	1089	2.24
T10	0.2	3957	785	1.71
	0.4	3833	824	1.79
	0.6	3718	860	1.87
	0.8	3627	896	1.95
	1	3521	935	2.03
	1.2	3412	971	2.11
	1.4	3265	1017	2.21
	1.6	3144	1052	2.29
	1.8	3008	1097	2.39

Horizontal Flow				
Speed Tap	ESP	CFM	RPM	BHP
T7	0.2	2680	582	0.62
	0.4	2528	638	0.68
	0.6	2369	693	0.74
	0.8	2184	755	0.80
	1	1990	816	0.87
	1.2	1835	862	0.92
	1.4	1574	964	1.02
	1.6	-	-	-
	1.8	-	-	-
T8	0.2	3092	641	0.88
	0.4	2951	690	0.94
	0.6	2814	738	1.01
	0.8	2680	789	1.08
	1	2520	840	1.15
	1.2	2385	885	1.21
	1.4	2163	961	1.32
	1.6	2008	1002	1.37
	1.8	1852	1048	1.43
T9	0.2	3847	768	1.58
	0.4	3719	808	1.66
	0.6	3604	845	1.74
	0.8	3514	880	1.81
	1	3406	920	1.89
	1.2	3293	957	1.97
	1.4	3133	1007	2.07
	1.6	3008	1042	2.14
	1.8	2866	1089	2.24
T10	0.2	3973	771	1.68
	0.4	3857	809	1.76
	0.6	3752	845	1.84
	0.8	3673	880	1.91
	1	3568	916	1.99
	1.2	3463	955	2.08
	1.4	3328	991	2.16
	1.6	3228	1028	2.24
	1.8	3082	1078	2.35

7.5 Ton Fan Data • 180 MBH Gas Heat Exchange • Models: DFG0903D, DFG0904D, DFG0907D

Down Flow				
Speed Tap	**ESP**	**CFM**	**RPM**	**BHP**
T1	0.2	1889	504	0.30
	0.4	1815	538	0.32
	0.6	-	-	-
	0.8	-	-	-
T2	0.2	2136	542	0.41
	0.4	2047	580	0.44
	0.6	1758	672	0.51
	0.8	1532	739	0.56
T3	0.2	3035	682	0.97
	0.4	2904	726	1.04
	0.6	2772	770	1.10
	0.8	2625	819	1.17
T4	0.2	3289	722	1.19
	0.4	3153	766	1.26
	0.6	3049	800	1.32
	0.8	2920	845	1.39
T5	0.2	3404	739	1.29
	0.4	3267	783	1.37
	0.6	3173	814	1.42
	0.8	3050	858	1.50
T6	0.2	1705	475	0.22
	0.4	1645	507	0.24
	0.6	-	-	-
	0.8	-	-	-
T7	0.2	2136	542	0.25
	0.4	2047	580	0.27
	0.6	1758	672	0.31
	0.8	1532	739	0.35
T8	0.2	2537	605	0.63
	0.4	2426	646	0.67
	0.6	2215	714	0.74
	0.8	2028	773	0.80
T9	0.2	3289	722	1.19
	0.4	3153	766	1.26
	0.6	3049	800	1.32
	0.8	2920	845	1.39
T10	0.2	3404	739	1.29
	0.4	3267	783	1.37
	0.6	3173	814	1.42
	0.8	3050	858	1.50

Horizontal Flow				
Speed Tap	**ESP**	**CFM**	**RPM**	**BHP**
T1	0.2	1996	476	0.28
	0.4	1801	545	0.32
	0.6	1613	616	0.36
	0.8	-	-	-
T2	0.2	2250	512	0.39
	0.4	2068	576	0.43
	0.6	1892	641	0.48
	0.8	1623	722	0.54
T3	0.2	3169	643	0.92
	0.4	3028	690	0.98
	0.6	2890	737	1.05
	0.8	2760	787	1.12
T4	0.2	3427	681	1.12
	0.4	3296	724	1.19
	0.6	3168	766	1.26
	0.8	3063	810	1.33
T5	0.2	3545	698	1.22
	0.4	3417	739	1.29
	0.6	3293	780	1.36
	0.8	3197	821	1.44
T6	0.2	1808	449	0.21
	0.4	1602	523	0.24
	0.6	-	-	-
	0.8	-	-	-
T7	0.2	2250	512	0.24
	0.4	2068	576	0.27
	0.6	1892	641	0.30
	0.8	1623	722	0.34
T8	0.2	2660	570	0.59
	0.4	2498	626	0.65
	0.6	2340	683	0.71
	0.8	2140	749	0.78
T9	0.2	3427	681	1.12
	0.4	3296	724	1.19
	0.6	3168	766	1.26
	0.8	3063	810	1.33
T10	0.2	3545	698	1.22
	0.4	3417	739	1.29
	0.6	3293	780	1.36
	0.8	3197	821	1.44

7.5 Ton Fan Data • 180 MBH Gas Heat Exchange • Models: DFG0903L, DFG0904L, DFG0907L

Down Flow				
Speed Tap	ESP	CFM	RPM	BHP
T1	0.2	2136	542	0.41
	0.4	2047	580	0.44
	0.6	1758	672	0.51
	0.8	1532	739	0.56
	1	-	-	-
	1.2	-	-	-
	1.4	-	-	-
T2	0.2	2374	579	0.53
	0.4	2271	619	0.57
	0.6	2030	697	0.64
	0.8	1827	759	0.70
	1	1656	808	0.74
	1.2	-	-	-
	1.4	-	-	-
T3	0.2	3404	739	1.29
	0.4	3267	783	1.37
	0.6	3173	814	1.42
	0.8	3050	858	1.50
	1	2934	899	1.57
	1.2	2815	935	1.63
	1.4	2628	985	1.72
T4	0.2	3579	766	1.47
	0.4	3442	810	1.55
	0.6	3359	837	1.60
	0.8	3245	877	1.68
	1	3134	917	1.76
	1.2	3022	952	1.82
	1.4	2843	1000	1.91
T5	0.2	3711	787	1.61
	0.4	3576	829	1.70
	0.6	3497	854	1.75
	0.8	3388	893	1.83
	1	3281	931	1.91
	1.2	3172	965	1.98
	1.4	3002	1011	2.07
T6	0.2	2273	564	0.48
	0.4	2176	602	0.51
	0.6	1915	686	0.58
	0.8	1703	750	0.64
	1	1525	800	0.68
	1.2	-	-	-
	1.4	-	-	-
T7	0.2	2664	625	0.71
	0.4	2546	667	0.75
	0.6	2358	728	0.82
	0.8	2182	784	0.89
	1	2029	831	0.94
	1.2	1871	876	0.99
	1.4	1674	932	1.06
T8	0.2	3023	680	0.96
	0.4	2893	724	1.03
	0.6	2759	769	1.09
	0.8	2611	818	1.16
	1	2478	862	1.22
	1.2	2342	902	1.28
	1.4	2145	957	1.36
T9	0.2	3579	766	1.47
	0.4	3442	810	1.55
	0.6	3359	837	1.60
	0.8	3245	877	1.68
	1	3134	917	1.76
	1.2	3022	952	1.82
	1.4	2843	1000	1.91
T10	0.2	3711	787	1.61
	0.4	3576	829	1.70
	0.6	3497	854	1.75
	0.8	3388	893	1.83
	1	3281	931	1.91
	1.2	3172	965	1.98
	1.4	3002	1011	2.07

Horizontal Flow				
Speed Tap	ESP	CFM	RPM	BHP
T1	0.2	2250	512	0.39
	0.4	2068	576	0.43
	0.6	1892	641	0.48
	0.8	1623	722	0.54
	1	-	-	-
	1.2	-	-	-
	1.4	-	-	-
T2	0.2	2493	546	0.50
	0.4	2323	606	0.56
	0.6	2158	665	0.61
	0.8	1932	738	0.68
	1	1720	797	0.73
	1.2	1565	854	0.78
	1.4	-	-	-
T3	0.2	3545	698	1.22
	0.4	3417	739	1.29
	0.6	3293	780	1.36
	0.8	3197	821	1.44
	1	3070	865	1.51
	1.2	2940	908	1.59
	1.4	2767	959	1.68
T4	0.2	3722	724	1.39
	0.4	3600	763	1.46
	0.6	3481	801	1.53
	0.8	3395	839	1.61
	1	3278	881	1.69
	1.2	3153	922	1.76
	1.4	2995	965	1.85
T5	0.2	3856	744	1.52
	0.4	3738	782	1.60
	0.6	3623	818	1.68
	0.8	3540	853	1.75
	1	3430	894	1.83
	1.2	3309	933	1.91
	1.4	3163	972	1.99
T6	0.2	2390	532	0.45
	0.4	2215	593	0.50
	0.6	2045	655	0.56
	0.8	1802	731	0.62
	1	1580	792	0.67
	1.2	-	-	-
	1.4	-	-	-
T7	0.2	2790	589	0.67
	0.4	2633	642	0.73
	0.6	2480	696	0.79
	0.8	2301	758	0.86
	1	2116	813	0.92
	1.2	1968	865	0.98
	1.4	1729	958	1.08
T8	0.2	3157	642	0.91
	0.4	3016	689	0.98
	0.6	2877	736	1.04
	0.8	2746	786	1.11
	1	2591	836	1.18
	1.2	2452	883	1.25
	1.4	2245	954	1.35
T9	0.2	3722	724	1.39
	0.4	3600	763	1.46
	0.6	3481	801	1.53
	0.8	3395	839	1.61
	1	3278	881	1.69
	1.2	3153	922	1.76
	1.4	2995	965	1.85
T10	0.2	3856	744	1.52
	0.4	3738	782	1.60
	0.6	3623	818	1.68
	0.8	3540	853	1.75
	1	3430	894	1.83
	1.2	3309	933	1.91
	1.4	3163	972	1.99

7.5 Ton Fan Data • 180 MBH Gas Heat Exchange • Models: DFG0903W, DFG0904W, DFG0907W

Down Flow				
Speed Tap	ESP	CFM	RPM	BHP
T1	0.2	2307	569	0.49
	0.4	2208	608	0.52
	0.6	1954	690	0.59
	0.8	1745	753	0.65
	1	1569	803	0.69
	1.2	-	-	-
	1.4	-	-	-
	1.6	-	-	-
	1.8	-	-	-
T2	0.2	2511	601	0.60
	0.4	2401	642	0.64
	0.6	2186	711	0.71
	0.8	1996	771	0.77
	1	1834	819	0.82
	1.2	1666	865	0.87
	1.4	-	-	-
	1.6	-	-	-
	1.8	-	-	-
T3	0.2	3564	764	1.43
	0.4	3428	807	1.51
	0.6	3343	835	1.56
	0.8	3229	876	1.63
	1	3118	915	1.71
	1.2	3005	950	1.77
	1.4	2825	998	1.86
	1.6	2705	1034	1.93
	1.8	2443	1102	2.06
T4	0.2	3820	803	1.70
	0.4	3687	844	1.79
	0.6	3608	869	1.84
	0.8	3502	906	1.92
	1	3397	944	2.00
	1.2	3291	977	2.07
	1.4	3129	1021	2.17
	1.6	3015	1055	2.24
	1.8	2781	1115	2.37
T5	0.2	3981	828	1.90
	0.4	3855	867	1.99
	0.6	3769	892	2.05
	0.8	3667	928	2.13
	1	3564	964	2.21
	1.2	3459	997	2.29
	1.4	3313	1036	2.38
	1.6	3202	1070	2.46
	1.8	3000	1122	2.58
T6	0.2	2407	585	0.54
	0.4	2302	625	0.58
	0.6	2068	700	0.65
	0.8	1868	762	0.71
	1	1699	811	0.75
	1.2	1524	859	0.80
	1.4	-	-	-
	1.6	-	-	-
	1.8	-	-	-

Horizontal Flow				
Speed Tap	ESP	CFM	RPM	BHP
T1	0.2	2425	537	0.46
	0.4	2251	597	0.51
	0.6	2083	658	0.57
	0.8	1845	733	0.63
	1	1627	794	0.68
	1.2	-	-	-
	1.4	-	-	-
	1.6	-	-	-
	1.8	-	-	-
T2	0.2	2634	567	0.57
	0.4	2470	623	0.62
	0.6	2311	680	0.68
	0.8	2108	747	0.75
	1	1909	804	0.81
	1.2	1757	859	0.86
	1.4	1505	962	0.96
	1.6	-	-	-
	1.8	-	-	-
T3	0.2	3707	722	1.35
	0.4	3585	761	1.42
	0.6	3466	800	1.49
	0.8	3379	837	1.56
	1	3261	879	1.64
	1.2	3136	920	1.72
	1.4	2977	965	1.80
	1.6	2834	1016	1.90
	1.8	2689	1054	1.97
T4	0.2	3966	760	1.61
	0.4	3850	797	1.69
	0.6	3737	832	1.76
	0.8	3655	866	1.84
	1	3550	905	1.92
	1.2	3432	944	2.00
	1.4	3295	980	2.08
	1.6	3165	1032	2.19
	1.8	3038	1065	2.26
T5	0.2	4128	785	1.80
	0.4	4015	820	1.88
	0.6	3906	854	1.96
	0.8	3819	887	2.04
	1	3720	924	2.12
	1.2	3606	961	2.21
	1.4	3484	994	2.28
	1.6	3364	1044	2.40
	1.8	3246	1075	2.47
T6	0.2	2527	551	0.51
	0.4	2358	610	0.57
	0.6	2195	669	0.62
	0.8	1974	740	0.69
	1	1765	799	0.74
	1.2	1611	855	0.79
	1.4	-	-	-
	1.6	-	-	-
	1.8	-	-	-

Down Flow				
Speed Tap	ESP	CFM	RPM	BHP
T7	0.2	2994	676	0.93
	0.4	2865	720	0.99
	0.6	2727	765	1.05
	0.8	2577	815	1.12
	1	2443	860	1.18
	1.2	2305	900	1.23
	1.4	2107	955	1.31
	1.6	1968	996	1.36
	1.8	1711	1067	1.46
T8	0.2	3505	755	1.37
	0.4	3368	799	1.45
	0.6	3281	827	1.50
	0.8	3163	869	1.57
	1	3051	909	1.65
	1.2	2936	944	1.71
	1.4	2753	993	1.80
	1.6	2632	1030	1.86
	1.8	2365	1099	1.99
T9	0.2	3820	803	1.70
	0.4	3687	844	1.79
	0.6	3608	869	1.84
	0.8	3502	906	1.92
	1	3397	944	2.00
	1.2	3291	977	2.07
	1.4	3129	1021	2.17
	1.6	3015	1055	2.24
	1.8	2781	1115	2.37
T10	0.2	3981	828	1.90
	0.4	3855	867	1.99
	0.6	3769	892	2.05
	0.8	3667	928	2.13
	1	3564	964	2.21
	1.2	3459	997	2.29
	1.4	3313	1036	2.38
	1.6	3202	1070	2.46
	1.8	3000	1122	2.58

Horizontal Flow				
Speed Tap	ESP	CFM	RPM	BHP
T7	0.2	3127	637	0.87
	0.4	2985	685	0.94
	0.6	2846	733	1.00
	0.8	2711	784	1.07
	1	2554	834	1.14
	1.2	2414	882	1.21
	1.4	2205	954	1.31
	1.6	2046	987	1.35
	1.8	1853	1046	1.43
T8	0.2	3647	713	1.29
	0.4	3523	753	1.36
	0.6	3402	792	1.43
	0.8	3312	831	1.50
	1	3191	874	1.58
	1.2	3065	916	1.66
	1.4	2900	962	1.74
	1.6	2755	1012	1.83
	1.8	2606	1052	1.90
T9	0.2	3966	760	1.61
	0.4	3850	797	1.69
	0.6	3737	832	1.76
	0.8	3655	866	1.84
	1	3550	905	1.92
	1.2	3432	944	2.00
	1.4	3295	980	2.08
	1.6	3165	1032	2.19
	1.8	3038	1065	2.26
T10	0.2	4128	785	1.80
	0.4	4015	820	1.88
	0.6	3906	854	1.96
	0.8	3819	887	2.04
	1	3720	924	2.12
	1.2	3606	961	2.21
	1.4	3484	994	2.28
	1.6	3364	1044	2.40
	1.8	3246	1075	2.47

7.5 Ton Fan Data • 225 MBH Gas Heat Exchange • Models: DFG0903D, DFG0904D, DFG0907D

Down Flow				
Speed Tap	**ESP**	**CFM**	**RPM**	**BHP**
T1	0.2	1930	527	0.31
	0.4	1731	594	0.35
	0.6	1551	667	0.39
	0.8	-	-	-
T2	0.2	2136	561	0.40
	0.4	1958	620	0.45
	0.6	1791	690	0.50
	0.8	1672	751	0.54
T3	0.2	3009	703	0.94
	0.4	2904	738	0.98
	0.6	2786	792	1.05
	0.8	2650	838	1.12
T4	0.2	3208	736	1.10
	0.4	3114	767	1.15
	0.6	3005	818	1.22
	0.8	2870	861	1.28
T5	0.2	3330	756	1.21
	0.4	3242	786	1.25
	0.6	3138	834	1.33
	0.8	3004	875	1.40
T6	0.2	2476	616	0.58
	0.4	2329	664	0.63
	0.6	2183	728	0.69
	0.8	2054	783	0.74
T7	0.2	3174	730	0.69
	0.4	3078	762	0.72
	0.6	2968	813	0.77
	0.8	2833	857	0.81
T8	0.2	3735	822	1.63
	0.4	3659	851	1.69
	0.6	3568	892	1.77
	0.8	3447	928	1.84
T9	0.2	3208	736	1.10
	0.4	3114	767	1.15
	0.6	3005	818	1.22
	0.8	2870	861	1.28
T10	0.2	3330	756	1.21
	0.4	3242	786	1.25
	0.6	3138	834	1.33
	0.8	3004	875	1.40

Horizontal Flow				
Speed Tap	**ESP**	**CFM**	**RPM**	**BHP**
T1	0.2	1991	485	0.29
	0.4	1791	572	0.34
	0.6	1568	650	0.38
	0.8	-	-	-
T2	0.2	2210	515	0.37
	0.4	2026	594	0.43
	0.6	1821	667	0.48
	0.8	1724	734	0.53
T3	0.2	3130	643	0.86
	0.4	3002	694	0.92
	0.6	2865	748	1.00
	0.8	2742	798	1.06
T4	0.2	3338	673	1.00
	0.4	3220	718	1.07
	0.6	3095	769	1.15
	0.8	2970	815	1.22
T5	0.2	3464	691	1.10
	0.4	3351	734	1.17
	0.6	3233	783	1.25
	0.8	3108	827	1.32
T6	0.2	2570	564	0.53
	0.4	2409	631	0.59
	0.6	2234	697	0.66
	0.8	2124	756	0.71
T7	0.2	3302	668	0.63
	0.4	3182	714	0.67
	0.6	3055	765	0.72
	0.8	2931	812	0.77
T8	0.2	3882	754	1.50
	0.4	3781	791	1.57
	0.6	3676	834	1.66
	0.8	3560	872	1.73
T9	0.2	3338	673	1.00
	0.4	3220	718	1.07
	0.6	3095	769	1.15
	0.8	2970	815	1.22
T10	0.2	3464	691	1.10
	0.4	3351	734	1.17
	0.6	3233	783	1.25
	0.8	3108	827	1.32

7.5 Ton Fan Data • 225 MBH Gas Heat Exchange • Models: DFG0903L, DFG0904L, DFG0907L

Down Flow				
Speed Tap	ESP	CFM	RPM	BHP
T1	0.2	2136	561	0.40
	0.4	1958	620	0.44
	0.6	1791	690	0.49
	0.8	1672	751	0.53
	1	-	-	-
	1.2	-	-	-
	1.4	-	-	-
T2	0.2	2349	595	0.50
	0.4	2191	648	0.55
	0.6	2037	714	0.60
	0.8	1911	771	0.65
	1	1731	823	0.69
	1.2	-	-	-
	1.4	-	-	-
T3	0.2	3324	755	1.18
	0.4	3236	785	1.23
	0.6	3132	833	1.30
	0.8	2999	875	1.37
	1	2869	915	1.43
	1.2	2692	959	1.50
	1.4	2507	1003	1.57
T4	0.2	3596	799	1.45
	0.4	3517	828	1.50
	0.6	3423	871	1.58
	0.8	3295	909	1.65
	1	3178	947	1.71
	1.2	3017	987	1.79
	1.4	2847	1029	1.86
T5	0.2	3735	822	1.60
	0.4	3659	851	1.66
	0.6	3568	892	1.74
	0.8	3447	928	1.81
	1	3334	965	1.88
	1.2	3181	1003	1.96
	1.4	3020	1044	2.03
T6	0.2	2746	660	0.74
	0.4	2621	701	0.78
	0.6	2490	760	0.85
	0.8	2356	810	0.90
	1	2198	857	0.95
	1.2	1986	908	1.01
	1.4	1776	956	1.06
T7	0.2	3446	775	1.29
	0.4	3363	804	1.34
	0.6	3264	850	1.42
	0.8	3132	889	1.49
	1	3008	929	1.55
	1.2	2838	971	1.62
	1.4	2660	1014	1.69
T8	0.2	3983	862	1.92
	0.4	3905	896	2.00
	0.6	3818	932	2.08
	0.8	3712	966	2.15
	1	3608	1000	2.23
	1.2	3468	1036	2.31
	1.4	3326	1073	2.39
T9	0.2	3596	799	1.45
	0.4	3517	828	1.50
	0.6	3423	871	1.58
	0.8	3295	909	1.65
	1	3178	947	1.71
	1.2	3017	987	1.79
	1.4	2847	1029	1.86
T10	0.2	3735	822	1.60
	0.4	3659	851	1.66
	0.6	3568	892	1.74
	0.8	3447	928	1.81
	1	3334	965	1.88
	1.2	3181	1003	1.96
	1.4	3020	1044	2.03

Horizontal Flow				
Speed Tap	ESP	CFM	RPM	BHP
T1	0.2	2210	515	0.37
	0.4	2026	594	0.42
	0.6	1821	667	0.47
	0.8	1724	734	0.52
	1	1522	795	0.56
	1.2	-	-	-
	1.4	-	-	-
T2	0.2	2435	546	0.46
	0.4	2266	617	0.52
	0.6	2080	685	0.58
	0.8	1975	748	0.63
	1	1788	806	0.68
	1.2	1595	867	0.73
	1.4	-	-	-
T3	0.2	3459	691	1.08
	0.4	3345	733	1.15
	0.6	3226	782	1.22
	0.8	3102	826	1.29
	1	2980	872	1.36
	1.2	2850	921	1.44
	1.4	2696	971	1.52
T4	0.2	3585	709	1.28
	0.4	3476	750	1.36
	0.6	3363	797	1.44
	0.8	3239	839	1.52
	1	3123	883	1.60
	1.2	3001	930	1.68
	1.4	2851	978	1.77
T5	0.2	3882	754	1.47
	0.4	3781	791	1.54
	0.6	3676	834	1.63
	0.8	3560	872	1.70
	1	3457	912	1.78
	1.2	3351	955	1.86
	1.4	3216	998	1.95
T6	0.2	2854	604	0.67
	0.4	2711	662	0.74
	0.6	2556	722	0.80
	0.8	2438	776	0.86
	1	2280	830	0.92
	1.2	2113	886	0.99
	1.4	1948	943	1.05
T7	0.2	3585	709	1.18
	0.4	3476	750	1.25
	0.6	3363	797	1.33
	0.8	3239	839	1.40
	1	3123	883	1.48
	1.2	3001	930	1.55
	1.4	2851	978	1.63
T8	0.2	4135	794	1.77
	0.4	4034	830	1.85
	0.6	3930	871	1.94
	0.8	3828	906	2.02
	1	3732	943	2.10
	1.2	3639	982	2.19
	1.4	3522	1021	2.27
T9	0.2	3585	709	1.28
	0.4	3476	750	1.36
	0.6	3363	797	1.44
	0.8	3239	839	1.52
	1	3123	883	1.60
	1.2	3001	930	1.68
	1.4	2851	978	1.77
T10	0.2	3882	754	1.47
	0.4	3781	791	1.54
	0.6	3676	834	1.63
	0.8	3560	872	1.70
	1	3457	912	1.78
	1.2	3351	955	1.86
	1.4	3216	998	1.95

7.5 Ton Fan Data • 225 MBH Gas Heat Exchange • Models: DFG0903W, DFG0904W, DFG0907W

Down Flow				
Speed Tap	ESP	CFM	RPM	BHP
T1	0.2	2284	585	0.47
	0.4	2120	639	0.51
	0.6	1962	706	0.57
	0.8	1838	765	0.61
	1	1655	817	0.66
	1.2	-	-	-
	1.4	-	-	-
	1.6	-	-	-
	1.8	-	-	-
T2	0.2	2483	617	0.58
	0.4	2337	665	0.62
	0.6	2191	729	0.68
	0.8	2062	784	0.73
	1	1890	834	0.78
	1.2	1662	887	0.83
	1.4	-	-	-
	1.6	-	-	-
	1.8	-	-	-
T3	0.2	3581	797	1.43
	0.4	3502	826	1.48
	0.6	3407	869	1.56
	0.8	3280	907	1.63
	1	3161	945	1.70
	1.2	3000	986	1.77
	1.4	2829	1027	1.85
	1.6	2778	1070	1.92
	1.8	2637	1115	2.00
T4	0.2	3766	827	1.64
	0.4	3690	857	1.70
	0.6	3600	897	1.78
	0.8	3480	932	1.85
	1	3369	969	1.92
	1.2	3218	1007	2.00
	1.4	3059	1047	2.07
	1.6	3011	1087	2.15
	1.8	2882	1131	2.24
T5	0.2	3856	841	1.75
	0.4	3780	873	1.81
	0.6	3691	911	1.89
	0.8	3577	946	1.97
	1	3468	981	2.04
	1.2	3322	1019	2.12
	1.4	3170	1057	2.20
	1.6	3126	1096	2.28
	1.8	3004	1139	2.37
T6	0.2	2874	681	0.82
	0.4	2759	719	0.87
	0.6	2634	775	0.94
	0.8	2499	824	0.99
	1	2348	869	1.05
	1.2	2144	918	1.11
	1.4	1938	965	1.16
	1.6	1895	1015	1.22
	1.8	1739	1059	1.28

Horizontal Flow				
Speed Tap	ESP	CFM	RPM	BHP
T1	0.2	2366	536	0.43
	0.4	2193	610	0.49
	0.6	2001	680	0.55
	0.8	1898	743	0.60
	1	1707	803	0.64
	1.2	1509	864	0.694
	1.4	-	-	-
	1.6	-	-	-
	1.8	-	-	-
T2	0.2	2577	565	0.53
	0.4	2417	632	0.59
	0.6	2242	697	0.65
	0.8	2132	757	0.71
	1	1955	814	0.76
	1.2	1771	873	0.81
	1.4	1604	934	0.87
	1.6	-	-	-
	1.8	-	-	-
T3	0.2	3724	730	1.31
	0.4	3620	768	1.38
	0.6	3511	813	1.46
	0.8	3390	853	1.53
	1	3280	896	1.61
	1.2	3166	941	1.69
	1.4	3022	987	1.77
	1.6	2839	1046	1.88
	1.8	2699	1092	1.96
T4	0.2	3914	759	1.50
	0.4	3813	795	1.58
	0.6	3709	838	1.66
	0.8	3594	875	1.73
	1	3492	916	1.81
	1.2	3388	958	1.90
	1.4	3254	1001	1.98
	1.6	3085	1057	2.09
	1.8	2953	1102	2.18
T5	0.2	4006	774	1.61
	0.4	3905	809	1.68
	0.6	3802	851	1.77
	0.8	3692	887	1.84
	1	3592	926	1.93
	1.2	3494	967	2.01
	1.4	3366	1009	2.10
	1.6	3206	1062	2.21
	1.8	3080	1107	2.30
T6	0.2	2988	623	0.75
	0.4	2853	677	0.82
	0.6	2707	734	0.89
	0.8	2586	786	0.95
	1	2437	838	1.01
	1.2	2279	893	1.08
	1.4	2114	948	1.14
	1.6	1922	1008	1.22
	1.8	1762	1052	1.27

Down Flow				
Speed Tap	ESP	CFM	RPM	BHP
T7	0.2	3547	791	1.39
	0.4	3467	820	1.45
	0.6	3371	864	1.52
	0.8	3242	902	1.59
	1	3123	941	1.66
	1.2	2959	982	1.73
	1.4	2786	1024	1.81
	1.6	2735	1067	1.88
	1.8	2592	1112	1.96
T8	0.2	4057	874	2.03
	0.4	3976	911	2.11
	0.6	3889	945	2.19
	0.8	3790	978	2.27
	1	3687	1012	2.35
	1.2	3552	1047	2.43
	1.4	3416	1083	2.51
	1.6	3383	1119	2.60
	1.8	3285	1157	2.69
T9	0.2	3766	827	1.64
	0.4	3690	857	1.70
	0.6	3600	897	1.78
	0.8	3480	932	1.85
	1	3369	969	1.92
	1.2	3218	1007	2.00
	1.4	3059	1047	2.07
	1.6	3011	1087	2.15
	1.8	2882	1131	2.24
T10	0.2	3856	841	1.75
	0.4	3780	873	1.81
	0.6	3691	911	1.89
	0.8	3577	946	1.97
	1	3468	981	2.04
	1.2	3322	1019	2.12
	1.4	3170	1057	2.20
	1.6	3126	1096	2.28
	1.8	3004	1139	2.37

Horizontal Flow				
Speed Tap	ESP	CFM	RPM	BHP
T7	0.2	3689	725	1.28
	0.4	3583	764	1.35
	0.6	3474	809	1.43
	0.8	3352	849	1.50
	1	3241	893	1.57
	1.2	3125	938	1.66
	1.4	2979	985	1.74
	1.6	2794	1044	1.84
	1.8	2652	1090	1.92
T8	0.2	4209	807	1.87
	0.4	4106	843	1.96
	0.6	4001	883	2.05
	0.8	3906	917	2.13
	1	3810	954	2.21
	1.2	3722	991	2.30
	1.4	3611	1029	2.39
	1.6	3482	1075	2.50
	1.8	3369	1116	2.59
T9	0.2	3914	759	1.50
	0.4	3813	795	1.58
	0.6	3709	838	1.66
	0.8	3594	875	1.73
	1	3492	916	1.81
	1.2	3388	958	1.90
	1.4	3254	1001	1.98
	1.6	3085	1057	2.09
	1.8	2953	1102	2.18
T10	0.2	4006	774	1.61
	0.4	3905	809	1.68
	0.6	3802	851	1.77
	0.8	3692	887	1.84
	1	3592	926	1.93
	1.2	3494	967	2.01
	1.4	3366	1009	2.10
	1.6	3206	1062	2.21
	1.8	3080	1107	2.30

8.5 Ton Fan Data • 130 MBH Gas Heat Exchange • Models: DFG1023D, DFG1024D, DFG1027D

Down Flow				
Speed Tap	ESP	CFM	RPM	BHP
T1	0.2	2071	505	0.33
	0.4	1893	573	0.37
	0.6	1705	639	0.41
	0.8	-	-	-
T2	0.2	2268	533	0.41
	0.4	2095	597	0.46
	0.6	1918	660	0.51
	0.8	1761	704	0.55
T3	0.2	3305	686	1.06
	0.4	3160	732	1.13
	0.6	3034	776	1.20
	0.8	2934	812	1.26
T4	0.2	3652	738	1.37
	0.4	3518	780	1.45
	0.6	3401	819	1.53
	0.8	3309	855	1.59
T5	0.2	3740	751	1.46
	0.4	3608	792	1.54
	0.6	3492	830	1.62
	0.8	3402	866	1.69
T6	0.2	1860	475	0.24
	0.4	-	-	-
	0.6	-	-	-
	0.8	-	-	-
T7	0.2	1974	491	0.25
	0.4	1794	561	0.29
	0.6	-	-	-
	0.8	-	-	-
T8	0.2	2303	539	0.43
	0.4	2131	602	0.48
	0.6	1957	663	0.53
	0.8	1802	707	0.57
T9	0.2	3652	738	1.37
	0.4	3518	780	1.45
	0.6	3401	819	1.53
	0.8	3309	855	1.59
T10	0.2	3740	751	1.46
	0.4	3608	792	1.54
	0.6	3492	830	1.62
	0.8	3402	866	1.69

Horizontal Flow				
Speed Tap	ESP	CFM	RPM	BHP
T1	0.2	2063	496	0.32
	0.4	1895	561	0.36
	0.6	1700	628	0.41
	0.8	-	-	-
T2	0.2	2262	523	0.41
	0.4	2099	586	0.45
	0.6	1917	649	0.50
	0.8	-	-	-
T3	0.2	3314	673	1.04
	0.4	3179	719	1.11
	0.6	3052	764	1.18
	0.8	2940	809	1.25
T4	0.2	3665	725	1.35
	0.4	3540	766	1.43
	0.6	3426	806	1.50
	0.8	3340	844	1.57
T5	0.2	3753	738	1.44
	0.4	3631	778	1.52
	0.6	3520	817	1.59
	0.8	3437	854	1.66
T6	0.2	1848	466	0.24
	0.4	-	-	-
	0.6	-	-	-
	0.8	-	-	-
T7	0.2	1964	482	0.25
	0.4	1794	549	0.28
	0.6	-	-	-
	0.8	-	-	-
T8	0.2	2299	528	0.42
	0.4	2137	590	0.47
	0.6	1956	653	0.52
	0.8	1713	727	0.58
T9	0.2	3665	725	1.35
	0.4	3540	766	1.43
	0.6	3426	806	1.50
	0.8	3340	844	1.57
T10	0.2	3753	738	1.44
	0.4	3631	778	1.52
	0.6	3520	817	1.59
	0.8	3437	854	1.66

8.5 Ton Fan Data • 130 MBH Gas Heat Exchange •Models: DFG1023L, DFG1024L, DFG1027L

Down Flow				
Speed Tap	ESP	CFM	RPM	BHP
T1	0.2	2246	530	0.40
	0.4	2073	594	0.45
	0.6	1895	657	0.49
	0.8	1736	702	0.53
	1	-	-	-
	1.2	-	-	-
	1.4	-	-	-
T2	0.2	2457	561	0.50
	0.4	2289	621	0.55
	0.6	2124	680	0.61
	0.8	1980	722	0.64
	1	1792	781	0.70
	1.2	-	-	-
	1.4	-	-	-
T3	0.2	3582	728	1.28
	0.4	3446	770	1.36
	0.6	3327	810	1.43
	0.8	3235	846	1.49
	1	3120	889	1.57
	1.2	2994	928	1.64
	1.4	2809	983	1.73
T4	0.2	3957	785	1.68
	0.4	3833	824	1.76
	0.6	3718	860	1.84
	0.8	3627	896	1.91
	1	3521	935	2.00
	1.2	3412	971	2.07
	1.4	3265	1017	2.17
T5	0.2	4082	805	1.83
	0.4	3962	843	1.92
	0.6	3847	878	2.00
	0.8	3753	914	2.08
	1	3646	952	2.16
	1.2	3541	987	2.24
	1.4	3409	1030	2.34
T6	0.2	1936	486	0.27
	0.4	1755	556	0.31
	0.6	-	-	-
	0.8	-	-	-
	1	-	-	-
	1.2	-	-	-
	1.4	-	-	-
T7	0.2	2268	533	0.41
	0.4	2095	597	0.46
	0.6	1918	660	0.51
	0.8	1761	704	0.54
	1	-	-	-
	1.2	-	-	-
	1.4	-	-	-
T8	0.2	2580	579	0.56
	0.4	2415	637	0.62
	0.6	2256	693	0.68
	0.8	2120	735	0.72
	1	1943	791	0.77
	1.2	1752	843	0.82
	1.4	-	-	-
T9	0.2	3957	785	1.68
	0.4	3833	824	1.76
	0.6	3718	860	1.84
	0.8	3627	896	1.91
	1	3521	935	2.00
	1.2	3412	971	2.07
	1.4	3265	1017	2.17
T10	0.2	4082	805	1.83
	0.4	3962	843	1.92
	0.6	3847	878	2.00
	0.8	3753	914	2.08
	1	3646	952	2.16
	1.2	3541	987	2.24
	1.4	3409	1030	2.34

Horizontal Flow				
Speed Tap	ESP	CFM	RPM	BHP
T1	0.2	2241	520	0.39
	0.4	2077	583	0.44
	0.6	1893	647	0.49
	0.8	-	-	-
	1	-	-	-
	1.2	-	-	-
	1.4	-	-	-
T2	0.2	2455	550	0.49
	0.4	2297	610	0.54
	0.6	2126	669	0.60
	0.8	1907	738	0.66
	1	-	-	-
	1.2	-	-	-
	1.4	-	-	-
T3	0.2	3594	714	1.26
	0.4	3467	756	1.33
	0.6	3351	797	1.41
	0.8	3261	837	1.48
	1	3136	878	1.55
	1.2	3021	921	1.62
	1.4	2847	970	1.71
T4	0.2	3979	762	1.63
	0.4	3863	799	1.71
	0.6	3751	834	1.78
	0.8	3669	868	1.85
	1	3564	907	1.94
	1.2	3447	945	2.02
	1.4	3311	981	2.09
T5	0.2	4108	782	1.78
	0.4	3994	817	1.86
	0.6	3885	851	1.93
	0.8	3799	884	2.01
	1	3699	922	2.10
	1.2	3585	959	2.18
	1.4	3460	992	2.26
T6	0.2	1926	477	0.27
	0.4	1754	545	0.30
	0.6	-	-	-
	0.8	-	-	-
	1	-	-	-
	1.2	-	-	-
	1.4	-	-	-
T7	0.2	2262	523	0.40
	0.4	2099	586	0.45
	0.6	1917	649	0.50
	0.8	-	-	-
	1	-	-	-
	1.2	-	-	-
	1.4	-	-	-
T8	0.2	2580	568	0.55
	0.4	2424	625	0.61
	0.6	2260	682	0.66
	0.8	2060	747	0.73
	1	1857	810	0.79
	1.2	1697	857	0.84
	1.4	-	-	-
T9	0.2	3979	762	1.63
	0.4	3863	799	1.71
	0.6	3751	834	1.78
	0.8	3669	868	1.85
	1	3564	907	1.94
	1.2	3447	945	2.02
	1.4	3311	981	2.09
T10	0.2	4108	782	1.78
	0.4	3994	817	1.86
	0.6	3885	851	1.93
	0.8	3799	884	2.01
	1	3699	922	2.10
	1.2	3585	959	2.18
	1.4	3460	992	2.26

8.5 Ton Fan Data • 130 MBH Gas Heat Exchange • Models: DFG1023W, DFG1024W, DFG1027W

Down Flow				
Speed Tap	ESP	CFM	RPM	BHP
T1	0.2	2388	551	0.47
	0.4	2218	612	0.52
	0.6	2049	672	0.57
	0.8	1900	716	0.60
	1	1706	775	0.65
	1.2	-	-	-
	1.4	-	-	-
	1.6	-	-	-
	1.8	-	-	-
T2	0.2	2593	581	0.57
	0.4	2429	638	0.63
	0.6	2271	694	0.68
	0.8	2135	736	0.72
	1	1959	792	0.78
	1.2	1770	844	0.83
	1.4	-	-	-
	1.6	-	-	-
	1.8	-	-	-
T3	0.2	3787	759	1.49
	0.4	3657	799	1.56
	0.6	3541	837	1.64
	0.8	3451	872	1.71
	1	3343	913	1.79
	1.2	3227	950	1.86
	1.4	3061	1001	1.96
	1.6	2933	1037	2.03
	1.8	2788	1084	2.12
T4	0.2	4179	820	1.96
	0.4	4063	858	2.05
	0.6	3946	893	2.13
	0.8	3848	930	2.22
	1	3740	966	2.31
	1.2	3638	1001	2.39
	1.4	3519	1041	2.49
	1.6	3409	1074	2.57
	1.8	3290	1114	2.66
T5	0.2	4271	835	2.09
	0.4	4158	872	2.19
	0.6	4038	907	2.27
	0.8	3935	945	2.37
	1	3824	980	2.46
	1.2	3724	1015	2.54
	1.4	3618	1051	2.63
	1.6	3513	1084	2.72
	1.8	3403	1121	2.81
T6	0.2	2232	528	0.39
	0.4	2058	593	0.44
	0.6	1879	656	0.49
	0.8	1720	701	0.52
	1	-	-	-
	1.2	-	-	-
	1.4	-	-	-
	1.6	-	-	-
	1.8	-	-	-

Horizontal Flow				
Speed Tap	ESP	CFM	RPM	BHP
T1	0.2	2384	540	0.46
	0.4	2224	601	0.51
	0.6	2049	662	0.56
	0.8	1820	733	0.62
	1	-	-	-
	1.2	-	-	-
	1.4	-	-	-
	1.6	-	-	-
	1.8	-	-	-
T2	0.2	2593	570	0.56
	0.4	2438	627	0.62
	0.6	2275	684	0.67
	0.8	2077	748	0.74
	1	1875	811	0.80
	1.2	1715	858	0.84
	1.4	-	-	-
	1.6	-	-	-
	1.8	-	-	-
T3	0.2	3801	745	1.46
	0.4	3680	784	1.54
	0.6	3570	823	1.61
	0.8	3489	859	1.68
	1	3376	897	1.76
	1.2	3267	939	1.84
	1.4	3114	979	1.92
	1.6	3008	1017	1.99
	1.8	2854	1069	2.09
T4	0.2	4197	806	1.93
	0.4	4088	841	2.01
	0.6	3985	876	2.09
	0.8	3899	910	2.17
	1	3802	944	2.26
	1.2	3701	981	2.35
	1.4	3589	1014	2.42
	1.6	3493	1049	2.51
	1.8	3365	1094	2.62
T5	0.2	4288	821	2.06
	0.4	4183	855	2.14
	0.6	4080	890	2.23
	0.8	3987	924	2.32
	1	3892	957	2.40
	1.2	3791	994	2.49
	1.4	3689	1026	2.57
	1.6	3593	1061	2.66
	1.8	3474	1103	2.76
T6	0.2	2226	518	0.38
	0.4	2062	581	0.43
	0.6	1877	645	0.48
	0.8	-	-	-
	1	-	-	-
	1.2	-	-	-
	1.4	-	-	-
	1.6	-	-	-
	1.8	-	-	-

Down Flow				
Speed Tap	ESP	CFM	RPM	BHP
T7	0.2	2680	593	0.62
	0.4	2517	649	0.68
	0.6	2364	704	0.73
	0.8	2234	745	0.78
	1	2064	800	0.84
	1.2	1881	850	0.89
	1.4	-	-	-
	1.6	-	-	-
	1.8	-	-	-
T8	0.2	3086	653	0.88
	0.4	2935	702	0.95
	0.6	2800	750	1.01
	0.8	2692	788	1.06
	1	2552	837	1.13
	1.2	2396	882	1.19
	1.4	2176	945	1.27
	1.6	2025	990	1.33
	1.8	1855	1039	1.40
T9	0.2	4179	820	1.96
	0.4	4063	858	2.05
	0.6	3946	893	2.13
	0.8	3848	930	2.22
	1	3740	966	2.31
	1.2	3638	1001	2.39
	1.4	3519	1041	2.49
	1.6	3409	1074	2.57
	1.8	3290	1114	2.66
T10	0.2	4271	835	2.09
	0.4	4158	872	2.19
	0.6	4038	907	2.27
	0.8	3935	945	2.37
	1	3824	980	2.46
	1.2	3724	1015	2.54
	1.4	3618	1051	2.63
	1.6	3513	1084	2.72
	1.8	3403	1121	2.81

Horizontal Flow				
Speed Tap	ESP	CFM	RPM	BHP
T7	0.2	2680	582	0.61
	0.4	2528	638	0.67
	0.6	2369	693	0.72
	0.8	2184	755	0.79
	1	1990	816	0.85
	1.2	1835	862	0.90
	1.4	-	-	-
	1.6	-	-	-
	1.8	-	-	-
T8	0.2	3092	641	0.86
	0.4	2951	690	0.93
	0.6	2814	738	0.99
	0.8	2680	789	1.06
	1	2520	840	1.13
	1.2	2385	885	1.19
	1.4	2163	961	1.29
	1.6	2008	1002	1.35
	1.8	1852	1048	1.41
T9	0.2	4197	806	1.93
	0.4	4088	841	2.01
	0.6	3985	876	2.09
	0.8	3899	910	2.17
	1	3802	944	2.26
	1.2	3701	981	2.35
	1.4	3589	1014	2.42
	1.6	3493	1049	2.51
	1.8	3365	1094	2.62
T10	0.2	4288	821	2.06
	0.4	4183	855	2.14
	0.6	4080	890	2.23
	0.8	3987	924	2.32
	1	3892	957	2.40
	1.2	3791	994	2.49
	1.4	3689	1026	2.57
	1.6	3593	1061	2.66
	1.8	3474	1103	2.76

8.5 Ton Fan Data • 180 MBH Gas Heat Exchange • Models: DFG1023D, DFG1024D, DFG1027D

Down Flow				
Speed Tap	**ESP**	**CFM**	**RPM**	**BHP**
T1	0.2	1996	520	0.34
	0.4	1915	556	0.37
	0.6	-	-	-
	0.8	-	-	-
T2	0.2	2239	558	0.46
	0.4	2144	597	0.49
	0.6	1876	683	0.56
	0.8	-	-	-
T3	0.2	3257	717	1.16
	0.4	3122	761	1.23
	0.6	3014	796	1.29
	0.8	2883	842	1.36
T4	0.2	3618	772	1.51
	0.4	3481	815	1.59
	0.6	3399	842	1.64
	0.8	3287	882	1.72
T5	0.2	3721	788	1.62
	0.4	3586	830	1.71
	0.6	3506	855	1.76
	0.8	3398	894	1.84
T6	0.2	1705	475	0.22
	0.4	-	-	-
	0.6	-	-	-
	0.8	-	-	-
T7	0.2	2136	542	0.25
	0.4	2047	580	0.27
	0.6	1758	672	0.31
	0.8	-	-	-
T8	0.2	2537	605	0.63
	0.4	2426	646	0.67
	0.6	2215	714	0.74
	0.8	2028	773	0.80
T9	0.2	3618	772	1.51
	0.4	3481	815	1.59
	0.6	3399	842	1.64
	0.8	3287	882	1.72
T10	0.2	3721	788	1.62
	0.4	3586	830	1.71
	0.6	3506	855	1.76
	0.8	3398	894	1.84

Horizontal Flow				
Speed Tap	**ESP**	**CFM**	**RPM**	**BHP**
T1	0.2	2106	492	0.32
	0.4	1917	558	0.37
	0.6	1734	627	0.41
	0.8	-	-	-
T2	0.2	2355	527	0.43
	0.4	2178	589	0.49
	0.6	2007	651	0.54
	0.8	1758	729	0.60
T3	0.2	3395	676	1.09
	0.4	3263	720	1.16
	0.6	3133	763	1.23
	0.8	3025	807	1.30
T4	0.2	3761	730	1.43
	0.4	3640	769	1.50
	0.6	3523	806	1.57
	0.8	3438	843	1.65
T5	0.2	3866	745	1.53
	0.4	3747	783	1.61
	0.6	3632	819	1.69
	0.8	3550	854	1.76
T6	0.2	1808	449	0.21
	0.4	-	-	-
	0.6	-	-	-
	0.8	-	-	-
T7	0.2	2250	512	0.24
	0.4	2068	576	0.27
	0.6	1892	641	0.30
	0.8	-	-	-
T8	0.2	2660	570	0.59
	0.4	2498	626	0.65
	0.6	2340	683	0.71
	0.8	2140	749	0.78
T9	0.2	3761	730	1.43
	0.4	3640	769	1.50
	0.6	3523	806	1.57
	0.8	3438	843	1.65
T10	0.2	3866	745	1.53
	0.4	3747	783	1.61
	0.6	3632	819	1.69
	0.8	3550	854	1.76

8.5 Ton Fan Data • 180 MBH Gas Heat Exchange • Models: DFG1023L, DFG1024L, DFG1027L

Down Flow				
Speed Tap	ESP	CFM	RPM	BHP
T1	0.2	2239	558	0.45
	0.4	2144	597	0.48
	0.6	1876	683	0.55
	0.8	-	-	-
	1	-	-	-
	1.2	-	-	-
	1.4	-	-	-
T2	0.2	2459	593	0.57
	0.4	2352	633	0.61
	0.6	2127	706	0.68
	0.8	1932	766	0.74
	1	1767	815	0.79
	1.2	-	-	-
	1.4	-	-	-
T3	0.2	3560	763	1.42
	0.4	3423	807	1.50
	0.6	3338	834	1.55
	0.8	3223	875	1.63
	1	3112	915	1.70
	1.2	2999	950	1.77
	1.4	2819	998	1.86
T4	0.2	3919	818	1.82
	0.4	3790	858	1.91
	0.6	3708	883	1.97
	0.8	3605	919	2.05
	1	3501	956	2.13
	1.2	3395	989	2.20
	1.4	3243	1030	2.30
T5	0.2	4061	840	2.01
	0.4	3939	877	2.10
	0.6	3848	904	2.16
	0.8	3746	939	2.24
	1	3642	974	2.33
	1.2	3537	1007	2.41
	1.4	3402	1045	2.50
T6	0.2	2273	564	0.47
	0.4	2176	602	0.50
	0.6	1915	686	0.57
	0.8	1703	750	0.63
	1	-	-	-
	1.2	-	-	-
	1.4	-	-	-
T7	0.2	2664	625	0.70
	0.4	2546	667	0.74
	0.6	2358	728	0.81
	0.8	2182	784	0.87
	1	2029	831	0.93
	1.2	1871	876	0.98
	1.4			0.00
T8	0.2	3023	680	0.95
	0.4	2893	724	1.01
	0.6	2759	769	1.07
	0.8	2611	818	1.14
	1	2478	862	1.20
	1.2	2342	902	1.26
	1.4	2145	957	1.33
T9	0.2	3919	818	1.82
	0.4	3790	858	1.91
	0.6	3708	883	1.97
	0.8	3605	919	2.05
	1	3501	956	2.13
	1.2	3395	989	2.20
	1.4	3243	1030	2.30
T10	0.2	4061	840	2.01
	0.4	3939	877	2.10
	0.6	3848	904	2.16
	0.8	3746	939	2.24
	1	3642	974	2.33
	1.2	3537	1007	2.41
	1.4	3402	1045	2.50

Horizontal Flow				
Speed Tap	ESP	CFM	RPM	BHP
T1	0.2	2355	527	0.43
	0.4	2178	589	0.48
	0.6	2007	651	0.53
	0.8	1758	729	0.59
	1	-	-	-
	1.2	-	-	-
	1.4	-	-	-
T2	0.2	2581	559	0.54
	0.4	2414	616	0.60
	0.6	2253	674	0.65
	0.8	2041	743	0.72
	1	1838	802	0.77
	1.2	-	-	-
	1.4	-	-	-
T3	0.2	3702	721	1.34
	0.4	3580	761	1.42
	0.6	3460	799	1.49
	0.8	3373	836	1.56
	1	3255	879	1.64
	1.2	3130	920	1.71
	1.4	2970	964	1.79
T4	0.2	4066	775	1.73
	0.4	3952	811	1.81
	0.6	3842	845	1.88
	0.8	3757	878	1.96
	1	3656	917	2.04
	1.2	3540	954	2.13
	1.4	3412	988	2.20
T5	0.2	4209	797	1.91
	0.4	4097	832	1.99
	0.6	3989	865	2.07
	0.8	3897	898	2.15
	1	3799	935	2.23
	1.2	3689	971	2.32
	1.4	3573	1003	2.40
T6	0.2	2390	532	0.44
	0.4	2215	593	0.50
	0.6	2045	655	0.55
	0.8	1802	731	0.61
	1	-	-	-
	1.2	-	-	-
	1.4	-	-	-
T7	0.2	2790	589	0.66
	0.4	2633	642	0.72
	0.6	2480	696	0.78
	0.8	2301	758	0.84
	1	2116	813	0.91
	1.2	1968	865	0.96
	1.4	1729	958	1.07
T8	0.2	3157	642	0.89
	0.4	3016	689	0.96
	0.6	2877	736	1.02
	0.8	2746	786	1.09
	1	2591	836	1.16
	1.2	2452	883	1.23
	1.4	2245	954	1.33
T9	0.2	4066	775	1.73
	0.4	3952	811	1.81
	0.6	3842	845	1.88
	0.8	3757	878	1.96
	1	3656	917	2.04
	1.2	3540	954	2.13
	1.4	3412	988	2.20
T10	0.2	4209	797	1.91
	0.4	4097	832	1.99
	0.6	3989	865	2.07
	0.8	3897	898	2.15
	1	3799	935	2.23
	1.2	3689	971	2.32
	1.4	3573	1003	2.40

8.5 Ton Fan Data • 180 MBH Gas Heat Exchange • Models: DFG1023W, DFG1024W, DFG1027W

Down Flow				
Speed Tap	ESP	CFM	RPM	BHP
T1	0.2	2394	582	0.54
	0.4	2290	622	0.57
	0.6	2053	699	0.64
	0.8	1852	760	0.70
	1	-	-	-
	1.2	-	-	-
	1.4	-	-	-
	1.6	-	-	-
	1.8	-	-	-
T2	0.2	2594	614	0.65
	0.4	2480	655	0.70
	0.6	2280	720	0.77
	0.8	2098	778	0.83
	1	1941	826	0.88
	1.2	1778	871	0.93
	1.4	-	-	-
	1.6	-	-	-
	1.8	-	-	-
T3	0.2	3775	796	1.65
	0.4	3641	838	1.74
	0.6	3562	863	1.79
	0.8	3456	901	1.87
	1	3350	939	1.95
	1.2	3242	972	2.02
	1.4	3077	1017	2.11
	1.6	2962	1051	2.18
	1.8	2721	1113	2.31
T4	0.2	4174	857	2.17
	0.4	4060	892	2.26
	0.6	3956	921	2.33
	0.8	3854	955	2.42
	1	3749	990	2.50
	1.2	3643	1023	2.59
	1.4	3524	1057	2.67
	1.6	3413	1090	2.76
	1.8	3268	1129	2.86
T5	0.2	4267	871	2.31
	0.4	4161	903	2.39
	0.6	4042	936	2.48
	0.8	3938	970	2.57
	1	3831	1003	2.66
	1.2	3723	1037	2.75
	1.4	3619	1068	2.83
	1.6	3507	1101	2.92
	1.8	3400	1131	3.00
T6	0.2	2407	585	0.54
	0.4	2302	625	0.58
	0.6	2068	700	0.65
	0.8	1868	762	0.71
	1	-	-	-
	1.2	-	-	-
	1.4	-	-	-
	1.6	-	-	-
	1.8	-	-	-

Horizontal Flow				
Speed Tap	ESP	CFM	RPM	BHP
T1	0.2	2513	549	0.50
	0.4	2344	608	0.56
	0.6	2180	667	0.61
	0.8	1957	739	0.68
	1	1747	798	0.73
	1.2	-	-	-
	1.4	-	-	-
	1.6	-	-	-
	1.8	-	-	-
T2	0.2	2719	579	0.62
	0.4	2559	634	0.67
	0.6	2404	689	0.73
	0.8	2213	753	0.80
	1	2022	809	0.86
	1.2	1872	862	0.92
	1.4	-	-	-
	1.6	-	-	-
	1.8	-	-	-
T3	0.2	3921	754	1.56
	0.4	3804	791	1.64
	0.6	3690	826	1.71
	0.8	3608	861	1.79
	1	3501	900	1.87
	1.2	3382	939	1.95
	1.4	3241	977	2.03
	1.6	3109	1029	2.13
	1.8	2979	1063	2.20
T4	0.2	4323	815	2.06
	0.4	4211	849	2.15
	0.6	4106	881	2.23
	0.8	4003	915	2.31
	1	3906	951	2.40
	1.2	3799	986	2.49
	1.4	3693	1018	2.57
	1.6	3590	1060	2.68
	1.8	3480	1092	2.76
T5	0.2	4415	829	2.20
	0.4	4304	863	2.29
	0.6	4199	895	2.37
	0.8	4083	930	2.46
	1	3987	965	2.56
	1.2	3883	999	2.65
	1.4	3785	1032	2.74
	1.6	3691	1069	2.83
	1.8	3584	1103	2.92
T6	0.2	2527	551	0.51
	0.4	2358	610	0.57
	0.6	2195	669	0.62
	0.8	1974	740	0.69
	1	1765	799	0.74
	1.2	-	-	-
	1.4	-	-	-
	1.6	-	-	-
	1.8	-	-	-

Down Flow				
Speed Tap	ESP	CFM	RPM	BHP
T7	0.2	2994	676	0.93
	0.4	2865	720	0.99
	0.6	2727	765	1.05
	0.8	2577	815	1.12
	1	2443	860	1.18
	1.2	2305	900	1.23
	1.4	2107	955	1.31
	1.6	1968	996	1.36
	1.8	1711	1067	1.46
T8	0.2	3505	755	1.37
	0.4	3368	799	1.45
	0.6	3281	827	1.50
	0.8	3163	869	1.57
	1	3051	909	1.65
	1.2	2936	944	1.71
	1.4	2753	993	1.80
	1.6	2632	1030	1.86
	1.8	2365	1099	1.99
T9	0.2	4174	857	2.17
	0.4	4060	892	2.26
	0.6	3956	921	2.33
	0.8	3854	955	2.42
	1	3749	990	2.50
	1.2	3643	1023	2.59
	1.4	3524	1057	2.67
	1.6	3413	1090	2.76
	1.8	3268	1129	2.86
T10	0.2	4267	871	2.31
	0.4	4161	903	2.39
	0.6	4042	936	2.48
	0.8	3938	970	2.57
	1	3831	1003	2.66
	1.2	3723	1037	2.75
	1.4	3619	1068	2.83
	1.6	3507	1101	2.92
	1.8	3400	1131	3.00

Horizontal Flow				
Speed Tap	ESP	CFM	RPM	BHP
T7	0.2	3127	637	0.87
	0.4	2985	685	0.94
	0.6	2846	733	1.00
	0.8	2711	784	1.07
	1	2554	834	1.14
	1.2	2414	882	1.21
	1.4	2205	954	1.31
	1.6	2046	987	1.35
	1.8	1853	1046	1.43
T8	0.2	3647	713	1.29
	0.4	3523	753	1.36
	0.6	3402	792	1.43
	0.8	3312	831	1.50
	1	3191	874	1.58
	1.2	3065	916	1.66
	1.4	2900	962	1.74
	1.6	2755	1012	1.83
	1.8	2606	1052	1.90
T9	0.2	4323	815	2.06
	0.4	4211	849	2.15
	0.6	4106	881	2.23
	0.8	4003	915	2.31
	1	3906	951	2.40
	1.2	3799	986	2.49
	1.4	3693	1018	2.57
	1.6	3590	1060	2.68
	1.8	3480	1092	2.76
T10	0.2	4415	829	2.20
	0.4	4304	863	2.29
	0.6	4199	895	2.37
	0.8	4083	930	2.46
	1	3987	965	2.56
	1.2	3883	999	2.65
	1.4	3785	1032	2.74
	1.6	3691	1069	2.83
	1.8	3584	1103	2.92

8.5 Ton Fan Data • 225 MBH Gas Heat Exchange • Models: DFG1023D, DFG1024D, DFG1027D

Down Flow				
Speed Tap	**ESP**	**CFM**	**RPM**	**BHP**
T1	0.2	2038	544	0.36
	0.4	1850	607	0.40
	0.6	-	-	-
	0.8	-	-	-
T2	0.2	2291	586	0.48
	0.4	2128	640	0.52
	0.6	1970	707	0.58
	0.8	1846	765	0.63
T3	0.2	3351	759	1.23
	0.4	3265	789	1.28
	0.6	3161	837	1.35
	0.8	3028	878	1.42
T4	0.2	3571	795	1.45
	0.4	3492	824	1.50
	0.6	3397	868	1.58
	0.8	3269	906	1.65
T5	0.2	3708	817	1.60
	0.4	3632	847	1.66
	0.6	3540	888	1.74
	0.8	3417	924	1.81
T6	0.2	2476	616	0.58
	0.4	2329	664	0.63
	0.6	2183	728	0.69
	0.8	2054	783	0.74
T7	0.2	3174	730	0.69
	0.4	3078	762	0.72
	0.6	2968	813	0.77
	0.8	2833	857	0.81
T8	0.2	3735	822	1.63
	0.4	3659	851	1.69
	0.6	3568	892	1.77
	0.8	3447	928	1.84
T9	0.2	3571	795	1.45
	0.4	3492	824	1.50
	0.6	3397	868	1.58
	0.8	3269	906	1.65
T10	0.2	3708	817	1.60
	0.4	3632	847	1.66
	0.6	3540	888	1.74
	0.8	3417	924	1.81

Horizontal Flow				
Speed Tap	**ESP**	**CFM**	**RPM**	**BHP**
T1	0.2	2106	500	0.33
	0.4	1914	583	0.38
	0.6	1701	659	0.43
	0.8	-	-	-
T2	0.2	2374	537	0.44
	0.4	2201	611	0.50
	0.6	2010	680	0.56
	0.8	1907	744	0.61
T3	0.2	3487	695	1.12
	0.4	3374	737	1.19
	0.6	3257	785	1.27
	0.8	3133	829	1.34
T4	0.2	3714	729	1.33
	0.4	3609	767	1.40
	0.6	3500	812	1.48
	0.8	3379	852	1.55
T5	0.2	3855	750	1.47
	0.4	3753	787	1.54
	0.6	3647	830	1.63
	0.8	3530	868	1.70
T6	0.2	2570	564	0.53
	0.4	2409	631	0.59
	0.6	2234	697	0.66
	0.8	2124	756	0.71
T7	0.2	3302	668	0.63
	0.4	3182	714	0.67
	0.6	3055	765	0.72
	0.8	2931	812	0.77
T8	0.2	3882	754	1.50
	0.4	3781	791	1.57
	0.6	3676	834	1.66
	0.8	3560	872	1.73
T9	0.2	3714	729	1.33
	0.4	3609	767	1.40
	0.6	3500	812	1.48
	0.8	3379	852	1.55
T10	0.2	3855	750	1.47
	0.4	3753	787	1.54
	0.6	3647	830	1.63
	0.8	3530	868	1.70

8.5 Ton Fan Data • 225 MBH Gas Heat Exchange • Models: DFG1023L, DFG1024L, DFG1027L

Down Flow				
Speed Tap	ESP	CFM	RPM	BHP
T1	0.2	2298	587	0.48
	0.4	2136	641	0.52
	0.6	1979	708	0.58
	0.8	1854	766	0.62
	1	-	-	-
	1.2	-	-	-
	1.4	-	-	-
T2	0.2	2441	610	0.55
	0.4	2291	660	0.60
	0.6	2143	724	0.66
	0.8	2015	780	0.71
	1	1840	830	0.75
	1.2	-	-	-
	1.4	-	-	-
T3	0.2	3610	801	1.46
	0.4	3532	830	1.51
	0.6	3438	873	1.59
	0.8	3311	911	1.66
	1	3194	949	1.73
	1.2	3034	989	1.80
	1.4	2865	1030	1.88
T4	0.2	3945	856	1.87
	0.4	3867	889	1.94
	0.6	3780	926	2.02
	0.8	3671	960	2.09
	1	3566	994	2.17
	1.2	3424	1031	2.25
	1.4	3279	1068	2.33
T5	0.2	4057	874	2.03
	0.4	3976	911	2.11
	0.6	3889	945	2.19
	0.8	3790	978	2.27
	1	3687	1012	2.35
	1.2	3552	1047	2.43
	1.4	3416	1083	2.51
T6	0.2	2746	660	0.74
	0.4	2621	701	0.78
	0.6	2490	760	0.85
	0.8	2356	810	0.90
	1	2198	857	0.95
	1.2	1986	908	1.01
	1.4	1776	956	1.06
T7	0.2	3446	775	1.29
	0.4	3363	804	1.34
	0.6	3264	850	1.42
	0.8	3132	889	1.49
	1	3008	929	1.55
	1.2	2838	971	1.62
	1.4	2660	1014	1.69
T8	0.2	3983	862	1.92
	0.4	3905	896	2.00
	0.6	3818	932	2.08
	0.8	3712	966	2.15
	1	3608	1000	2.23
	1.2	3468	1036	2.31
	1.4	3326	1073	2.39
T9	0.2	3945	856	1.87
	0.4	3867	889	1.94
	0.6	3780	926	2.02
	0.8	3671	960	2.09
	1	3566	994	2.17
	1.2	3424	1031	2.25
	1.4	3279	1068	2.33
T10	0.2	4057	874	2.03
	0.4	3976	911	2.11
	0.6	3889	945	2.19
	0.8	3790	978	2.27
	1	3687	1012	2.35
	1.2	3552	1047	2.43
	1.4	3416	1083	2.51

Horizontal Flow				
Speed Tap	ESP	CFM	RPM	BHP
T1	0.2	2382	538	0.44
	0.4	2209	611	0.50
	0.6	2019	681	0.55
	0.8	1915	744	0.60
	1	1725	803	0.65
	1.2	-	-	-
	1.4	-	-	-
T2	0.2	2533	559	0.51
	0.4	2370	627	0.57
	0.6	2192	693	0.63
	0.8	2083	754	0.68
	1	1903	811	0.73
	1.2	1716	871	0.79
	1.4	-	-	-
T3	0.2	3754	735	1.34
	0.4	3650	773	1.41
	0.6	3542	817	1.49
	0.8	3422	857	1.56
	1	3314	899	1.64
	1.2	3201	944	1.72
	1.4	3059	989	1.80
T4	0.2	4096	788	1.72
	0.4	3995	824	1.80
	0.6	3892	865	1.89
	0.8	3787	900	1.96
	1	3690	938	2.05
	1.2	3596	977	2.13
	1.4	3475	1017	2.22
T5	0.2	4209	807	1.87
	0.4	4106	843	1.96
	0.6	4001	883	2.05
	0.8	3906	917	2.13
	1	3810	954	2.21
	1.2	3722	991	2.30
	1.4	3611	1029	2.39
T6	0.2	2854	604	0.67
	0.4	2711	662	0.74
	0.6	2556	722	0.80
	0.8	2438	776	0.86
	1	2280	830	0.92
	1.2	2113	886	0.99
	1.4	1948	943	1.05
T7	0.2	3585	709	1.18
	0.4	3476	750	1.25
	0.6	3363	797	1.33
	0.8	3239	839	1.40
	1	3123	883	1.48
	1.2	3001	930	1.55
	1.4	2851	978	1.63
T8	0.2	4135	794	1.77
	0.4	4034	830	1.85
	0.6	3930	871	1.94
	0.8	3828	906	2.02
	1	3732	943	2.10
	1.2	3639	982	2.19
	1.4	3522	1021	2.27
T9	0.2	4096	788	1.72
	0.4	3995	824	1.80
	0.6	3892	865	1.89
	0.8	3787	900	1.96
	1	3690	938	2.05
	1.2	3596	977	2.13
	1.4	3475	1017	2.22
T10	0.2	4209	807	1.87
	0.4	4106	843	1.96
	0.6	4001	883	2.05
	0.8	3906	917	2.13
	1	3810	954	2.21
	1.2	3722	991	2.30
	1.4	3611	1029	2.39

8.5 Ton Fan Data • 225 MBH Gas Heat Exchange • Models: DFG1023W, DFG1024W, DFG1027W

Down Flow				
Speed Tap	ESP	CFM	RPM	BHP
T1	0.2	2378	617	0.52
	0.4	2222	663	0.56
	0.6	2070	714	0.62
	0.8	1943	759	0.67
	1	1765	801	0.71
	1.2	-	-	-
	1.4	-	-	-
	1.6	-	-	-
	1.8	-	-	-
T2	0.2	2566	711	0.62
	0.4	2427	760	0.67
	0.6	2285	813	0.73
	0.8	2155	862	0.78
	1	1987	906	0.83
	1.2	1764	950	0.88
	1.4	-	-	-
	1.6	-	-	-
	1.8	-	-	-
T3	0.2	3775	1607	1.65
	0.4	3699	1674	1.71
	0.6	3609	1740	1.79
	0.8	3490	1808	1.86
	1	3379	1870	1.93
	1.2	3228	1930	2.01
	1.4	3070	1997	2.09
	1.6	3023	2066	2.17
	1.8	2894	2136	2.25
T4	0.2	4057	1954	2.03
	0.4	3976	2026	2.11
	0.6	3889	2096	2.19
	0.8	3790	2166	2.27
	1	3687	2231	2.35
	1.2	3552	2296	2.43
	1.4	3416	2366	2.51
	1.6	3383	2438	2.60
	1.8	3285	2510	2.69
T5	0.2	4136	2072	2.15
	0.4	4050	2145	2.25
	0.6	3963	2217	2.33
	0.8	3872	2287	2.41
	1	3772	2353	2.49
	1.2	3640	2419	2.57
	1.4	3512	2489	2.66
	1.6	3486	2562	2.74
	1.8	3400	2634	2.83
T6	0.2	2874	886	0.82
	0.4	2759	939	0.87
	0.6	2634	995	0.94
	0.8	2499	1050	0.99
	1	2348	1098	1.05
	1.2	2144	1146	1.11
	1.4	1938	1200	1.16
	1.6	1895	1253	1.22
	1.8	1739	1304	1.28

Horizontal Flow				
Speed Tap	ESP	CFM	RPM	BHP
T1	0.2	2465	550	0.47
	0.4	2298	620	0.54
	0.6	2115	688	0.59
	0.8	2008	750	0.65
	1	1824	808	0.70
	1.2	-	-	-
	1.4	-	-	-
	1.6	-	-	-
	1.8	-	-	-
T2	0.2	2664	577	0.57
	0.4	2510	641	0.63
	0.6	2341	705	0.70
	0.8	2228	763	0.75
	1	2058	818	0.81
	1.2	1879	877	0.87
	1.4	1712	936	0.93
	1.6	-	-	-
	1.8	-	-	-
T3	0.2	3923	761	1.51
	0.4	3822	797	1.59
	0.6	3718	839	1.67
	0.8	3604	877	1.75
	1	3502	917	1.83
	1.2	3399	959	1.91
	1.4	3265	1002	1.99
	1.6	3097	1058	2.11
	1.8	2966	1102	2.20
T4	0.2	4209	807	1.87
	0.4	4106	843	1.96
	0.6	4001	883	2.05
	0.8	3906	917	2.13
	1	3810	954	2.21
	1.2	3722	991	2.30
	1.4	3611	1029	2.39
	1.6	3482	1075	2.50
	1.8	3369	1116	2.59
T5	0.2	4288	820	1.99
	0.4	4183	857	2.08
	0.6	4075	897	2.18
	0.8	3988	931	2.26
	1	3893	966	2.35
	1.2	3807	1002	2.43
	1.4	3706	1038	2.52
	1.6	3593	1080	2.62
	1.8	3487	1120	2.72
T6	0.2	2988	623	0.75
	0.4	2853	677	0.82
	0.6	2707	734	0.89
	0.8	2586	786	0.95
	1	2437	838	1.01
	1.2	2279	893	1.08
	1.4	2114	948	1.14
	1.6	1922	1008	1.22
	1.8	1762	1052	1.27

Down Flow				
Speed Tap	ESP	CFM	RPM	BHP
T7	0.2	3547	1383	1.39
	0.4	3467	1446	1.45
	0.6	3371	1510	1.52
	0.8	3242	1575	1.59
	1	3123	1633	1.66
	1.2	2959	1690	1.73
	1.4	2786	1755	1.81
	1.6	2735	1820	1.88
	1.8	2592	1887	1.96
T8	0.2	4057	1954	2.03
	0.4	3976	2026	2.11
	0.6	3889	2096	2.19
	0.8	3790	2166	2.27
	1	3687	2231	2.35
	1.2	3552	2296	2.43
	1.4	3416	2366	2.51
	1.6	3383	2438	2.60
	1.8	3285	2510	2.69
T9	0.2	4126	2057	2.14
	0.4	4041	2130	2.23
	0.6	3954	2201	2.31
	0.8	3862	2271	2.39
	1	3761	2337	2.47
	1.2	3629	2403	2.55
	1.4	3500	2473	2.64
	1.6	3473	2545	2.72
	1.8	3385	2617	2.81
T10	0.2	4191	2161	2.25
	0.4	4101	2235	2.35
	0.6	4012	2307	2.43
	0.8	3929	2378	2.51
	1	3829	2445	2.60
	1.2	3700	2512	2.68
	1.4	3578	2582	2.76
	1.6	3557	2655	2.85
	1.8	3481	2726	2.93

Horizontal Flow				
Speed Tap	ESP	CFM	RPM	BHP
T7	0.2	3689	725	1.28
	0.4	3583	764	1.35
	0.6	3474	809	1.43
	0.8	3352	849	1.50
	1	3241	893	1.57
	1.2	3125	938	1.66
	1.4	2979	985	1.74
	1.6	2794	1044	1.84
	1.8	2652	1090	1.92
T8	0.2	4209	807	1.87
	0.4	4106	843	1.96
	0.6	4001	883	2.05
	0.8	3906	917	2.13
	1	3810	954	2.21
	1.2	3722	991	2.30
	1.4	3611	1029	2.39
	1.6	3482	1075	2.50
	1.8	3369	1116	2.59
T9	0.2	4278	818	1.97
	0.4	4173	855	2.06
	0.6	4065	896	2.16
	0.8	3977	929	2.24
	1	3882	965	2.33
	1.2	3797	1000	2.41
	1.4	3694	1037	2.50
	1.6	3578	1080	2.61
	1.8	3472	1119	2.70
T10	0.2	4342	829	2.08
	0.4	4234	867	2.17
	0.6	4123	908	2.28
	0.8	4043	941	2.36
	1	3948	976	2.45
	1.2	3865	1010	2.53
	1.4	3770	1046	2.62
	1.6	3670	1084	2.72
	1.8	3569	1122	2.81

10.0 Ton Fan Data • 130 MBH Gas Heat Exchange • DFG1203D, DFG1204D, DFG1207D

Down Flow				
Speed Tap	**ESP**	**CFM**	**RPM**	**BHP**
T1	0.2	2116	500	0.35
	0.4	-	-	-
	0.6	-	-	-
	0.8	-	-	-
T2	0.2	2346	530	0.45
	0.4	2091	604	0.51
	0.6	-	-	-
	0.8	-	-	-
T3	0.2	3452	679	1.14
	0.4	3329	722	1.21
	0.6	3174	773	1.29
	0.8	2958	835	1.39
T4	0.2	4228	791	1.95
	0.4	4118	828	2.04
	0.6	4003	868	2.13
	0.8	3861	910	2.24
T5	0.2	4353	810	2.12
	0.4	4232	849	2.23
	0.6	4118	887	2.33
	0.8	4000	923	2.42
T6	0.2	2116	500	0.35
	0.4	-	-	-
	0.6	-	-	-
	0.8	-	-	-
T7	0.2	2189	510	0.35
	0.4	-	-	-
	0.6	-	-	-
	0.8	-	-	-
T8	0.2	2261	519	0.41
	0.4	-	-	-
	0.6	-	-	-
	0.8	-	-	-
T9	0.2	4228	791	1.95
	0.4	4118	828	2.04
	0.6	4003	868	2.13
	0.8	3861	910	2.24
T10	0.2	4353	810	2.12
	0.4	4232	849	2.23
	0.6	4118	887	2.33
	0.8	4000	923	2.42

Horizontal Flow				
Speed Tap	**ESP**	**CFM**	**RPM**	**BHP**
T1	0.2	2044	494	0.34
	0.4	-	-	-
	0.6	-	-	-
	0.8	-	-	-
T2	0.2	2326	519	0.44
	0.4	2146	580	0.49
	0.6	-	-	-
	0.8	-	-	-
T3	0.2	3601	646	1.08
	0.4	3491	688	1.15
	0.6	3348	739	1.23
	0.8	3122	795	1.33
T4	0.2	4364	751	1.85
	0.4	4267	789	1.94
	0.6	4165	827	2.04
	0.8	4034	868	2.13
T5	0.2	4465	771	2.02
	0.4	4365	810	2.12
	0.6	4262	847	2.22
	0.8	4158	887	2.33
T6	0.2	2044	494	0.34
	0.4	-	-	-
	0.6	-	-	-
	0.8	-	-	-
T7	0.2	2134	502	0.35
	0.4	-	-	-
	0.6	-	-	-
	0.8	-	-	-
T8	0.2	2222	510	0.40
	0.4	2035	572	0.45
	0.6	-	-	-
	0.8	-	-	-
T9	0.2	4364	751	1.85
	0.4	4267	789	1.94
	0.6	4165	827	2.04
	0.8	4034	868	2.13
T10	0.2	4465	771	2.02
	0.4	4365	810	2.12
	0.6	4262	847	2.22
	0.8	4158	887	2.33

10 Ton Fan Data • 130 MBH Gas Heat Exchange • Models: DFG1203L, DFG1204L, DFG1207L

Down Flow				
Speed Tap	ESP	CFM	RPM	BHP
T1	0.2	2371	573	0.51
	0.4	2177	639	0.57
	0.6	-	-	-
	0.8	-	-	-
	1	-	-	-
	1.2	-	-	-
	1.4	-	-	-
T2	0.2	2613	604	0.62
	0.4	2432	667	0.68
	0.6	2222	723	0.74
	0.8	2159	786	0.80
	1	-	-	-
	1.2	-	-	-
	1.4	-	-	-
T3	0.2	3758	760	1.30
	0.4	3640	804	1.38
	0.6	3515	847	1.45
	0.8	3384	891	1.52
	1	3236	936	1.60
	1.2	3077	979	1.68
	1.4	2919	1023	1.75
T4	0.2	4577	879	2.06
	0.4	4493	911	2.14
	0.6	4411	946	2.22
	0.8	4259	979	2.30
	1	4137	1015	2.38
	1.2	4018	1056	2.48
	1.4	3866	1097	2.57
T5	0.2	4699	897	2.21
	0.4	4618	929	2.28
	0.6	4540	962	2.37
	0.8	4390	994	2.44
	1	4272	1029	2.53
	1.2	4158	1069	2.63
	1.4	4009	1108	2.73
T6	0.2	2312	565	0.49
	0.4	2114	632	0.54
	0.6	-	-	-
	0.8	-	-	-
	1	-	-	-
	1.2	-	-	-
	1.4	-	-	-
T7	0.2	2650	609	0.63
	0.4	2472	671	0.70
	0.6	2266	727	0.76
	0.8	2200	789	0.82
	1	2017	848	0.88
	1.2	-	-	-
	1.4	-	-	-
T8	0.2	3146	676	0.89
	0.4	2996	729	0.96
	0.6	2828	779	1.03
	0.8	2729	833	1.10
	1	2562	886	1.17
	1.2	2372	928	1.23
	1.4	2217	973	1.29
T9	0.2	4577	879	2.06
	0.4	4493	911	2.14
	0.6	4411	946	2.22
	0.8	4259	979	2.30
	1	4137	1015	2.38
	1.2	4018	1056	2.48
	1.4	3866	1097	2.57
T10	0.2	4699	897	2.21
	0.4	4618	929	2.28
	0.6	4540	962	2.37
	0.8	4390	994	2.44
	1	4272	1029	2.53
	1.2	4158	1069	2.63
	1.4	4009	1108	2.73

Horizontal Flow				
Speed Tap	ESP	CFM	RPM	BHP
T1	0.2	2468	525	0.47
	0.4	2305	600	0.53
	0.6	2110	663	0.59
	0.8	-	-	-
	1	-	-	-
	1.2	-	-	-
	1.4	-	-	-
T2	0.2	2720	554	0.56
	0.4	2567	624	0.64
	0.6	2386	684	0.70
	0.8	2229	742	0.76
	1	2123	801	0.82
	1.2	-	-	-
	1.4	-	-	-
T3	0.2	3916	696	1.19
	0.4	3808	743	1.27
	0.6	3688	788	1.35
	0.8	3559	834	1.43
	1	3413	882	1.51
	1.2	3262	931	1.59
	1.4	3111	978	1.67
T4	0.2	4773	803	1.88
	0.4	4690	836	1.96
	0.6	4605	872	2.05
	0.8	4498	910	2.13
	1	4347	949	2.23
	1.2	4229	988	2.32
	1.4	4097	1033	2.42
T5	0.2	4901	819	2.01
	0.4	4821	851	2.09
	0.6	4739	885	2.18
	0.8	4636	922	2.27
	1	4487	960	2.36
	1.2	4375	998	2.45
	1.4	4247	1043	2.56
T6	0.2	4901	819	2.01
	0.4	4821	851	2.09
	0.6	4739	885	2.18
	0.8	4636	922	2.27
	1	4487	960	2.36
	1.2	4375	998	2.45
	1.4	4247	1043	2.56
T7	0.2	2759	559	0.58
	0.4	2608	628	0.65
	0.6	2429	687	0.71
	0.8	2273	745	0.77
	1	2165	804	0.84
	1.2	-	-	-
	1.4	-	-	-
T8	0.2	3276	620	0.82
	0.4	3146	678	0.90
	0.6	2994	731	0.97
	0.8	2850	783	1.04
	1	2722	837	1.11
	1.2	2547	895	1.18
	1.4	2386	941	1.24
T9	0.2	4773	803	1.88
	0.4	4690	836	1.96
	0.6	4605	872	2.05
	0.8	4498	910	2.13
	1	4347	949	2.23
	1.2	4229	988	2.32
	1.4	4097	1033	2.42
T10	0.2	4901	819	2.01
	0.4	4821	851	2.09
	0.6	4739	885	2.18
	0.8	4636	922	2.27
	1	4487	960	2.36
	1.2	4375	998	2.45
	1.4	4247	1043	2.56

10.0 Ton Fan Data • 130 MBH Gas Heat Exchange • Models: DFG1203W, DFG1204W, DFG1207W

Down Flow				
Speed Tap	ESP	CFM	RPM	BHP
T1	0.2	2536	594	0.58
	0.4	2352	658	0.64
	0.6	2135	715	0.70
	0.8	2078	779	0.76
	1	-	-	-
	1.2	-	-	-
	1.4	-	-	-
	1.6	-	-	-
	1.8	-	-	-
T2	0.2	2753	623	0.68
	0.4	2581	683	0.75
	0.6	2383	738	0.81
	0.8	2309	798	0.87
	1	2130	856	0.94
	1.2	-	-	-
	1.4	-	-	-
	1.6	-	-	-
	1.8	-	-	-
T3	0.2	4026	798	1.52
	0.4	3920	838	1.59
	0.6	3812	878	1.67
	0.8	3670	918	1.74
	1	3531	960	1.82
	1.2	3385	1003	1.91
	1.4	3228	1046	1.99
	1.6	3062	1089	2.07
	1.8	2925	1129	2.15
T4	0.2	4844	920	2.39
	0.4	4767	950	2.47
	0.6	4692	982	2.56
	0.8	4545	1012	2.63
	1	4431	1046	2.72
	1.2	4324	1085	2.82
	1.4	4178	1123	2.92
	1.6	4011	1157	3.01
	1.8	3846	1198	3.12
T5	0.2	4973	941	2.58
	0.4	4899	969	2.66
	0.6	4826	1001	2.74
	0.8	4684	1030	2.82
	1	4574	1062	2.91
	1.2	4471	1100	3.01
	1.4	4330	1137	3.12
	1.6	4168	1169	3.20
	1.8	4001	1209	3.31
T6	0.2	2111	539	0.41
	0.4	-	-	-
	0.6	-	-	-
	0.8	-	-	-
	1	-	-	-
	1.2	-	-	-
	1.4	-	-	-
	1.6	-	-	-
	1.8	-	-	-

Horizontal Flow				
Speed Tap	ESP	CFM	RPM	BHP
T1	0.2	2640	545	0.53
	0.4	2484	616	0.60
	0.6	2299	678	0.66
	0.8	2140	736	0.72
	1	2038	796	0.78
	1.2	-	-	-
	1.4	-	-	-
	1.6	-	-	-
	1.8	-	-	-
T2	0.2	2866	572	0.63
	0.4	2719	638	0.70
	0.6	2546	696	0.76
	0.8	2393	753	0.82
	1	2281	811	0.89
	1.2	2090	873	0.96
	1.4	-	-	-
	1.6	-	-	-
	1.8	-	-	-
T3	0.2	4196	730	1.39
	0.4	4097	772	1.47
	0.6	3990	814	1.55
	0.8	3868	857	1.63
	1	3717	902	1.72
	1.2	3576	948	1.80
	1.4	3431	995	1.89
	1.6	3266	1041	1.98
	1.8	3117	1086	2.06
T4	0.2	5054	839	2.18
	0.4	4976	870	2.26
	0.6	4898	902	2.35
	0.8	4799	938	2.44
	1	4655	974	2.54
	1.2	4549	1010	2.63
	1.4	4426	1054	2.74
	1.6	4288	1096	2.85
	1.8	4121	1132	2.95
T5	0.2	5189	858	2.35
	0.4	5114	887	2.43
	0.6	5039	918	2.52
	0.8	4944	952	2.61
	1	4805	988	2.71
	1.2	4705	1022	2.80
	1.4	4587	1064	2.92
	1.6	4456	1105	3.03
	1.8	4292	1141	3.13
T6	0.2	2197	494	0.37
	0.4	2022	574	0.43
	0.6	-	-	-
	0.8	-	-	-
	1	-	-	-
	1.2	-	-	-
	1.4	-	-	-
	1.6	-	-	-
	1.8	-	-	-

Down Flow				
Speed Tap	ESP	CFM	RPM	BHP
T7	0.2	2650	609	0.63
	0.4	2472	671	0.70
	0.6	2266	727	0.76
	0.8	2200	789	0.82
	1	2017	848	0.88
	1.2	-	-	-
	1.4	-	-	-
	1.6	-	-	-
	1.8	-	-	-
T8	0.2	3146	676	0.89
	0.4	2996	729	0.96
	0.6	2828	779	1.03
	0.8	2729	833	1.10
	1	2562	886	1.17
	1.2	2372	928	1.23
	1.4	2217	973	1.29
	1.6	2085	1024	1.35
	1.8	2003	1059	1.40
T9	0.2	4844	920	2.39
	0.4	4767	950	2.47
	0.6	4692	982	2.56
	0.8	4545	1012	2.63
	1	4431	1046	2.72
	1.2	4324	1085	2.82
	1.4	4178	1123	2.92
	1.6	4011	1157	3.01
	1.8	3846	1198	3.12
T10	0.2	4973	941	2.58
	0.4	4899	969	2.66
	0.6	4826	1001	2.74
	0.8	4684	1030	2.82
	1	4574	1062	2.91
	1.2	4471	1100	3.01
	1.4	4330	1137	3.12
	1.6	4168	1169	3.20
	1.8	4001	1209	3.31

Horizontal Flow				
Speed Tap	ESP	CFM	RPM	BHP
T7	0.2	2759	559	0.58
	0.4	2608	628	0.65
	0.6	2429	687	0.71
	0.8	2273	745	0.77
	1	2165	804	0.84
	1.2	-	-	-
	1.4	-	-	-
	1.6	-	-	-
	1.8	-	-	-
T8	0.2	3276	620	0.82
	0.4	3146	678	0.90
	0.6	2994	731	0.97
	0.8	2850	783	1.04
	1	2722	837	1.11
	1.2	2547	895	1.18
	1.4	2386	941	1.24
	1.6	2206	989	1.31
	1.8	2115	1044	1.38
T9	0.2	5054	839	2.18
	0.4	4976	870	2.26
	0.6	4898	902	2.35
	0.8	4799	938	2.44
	1	4655	974	2.54
	1.2	4549	1010	2.63
	1.4	4426	1054	2.74
	1.6	4288	1096	2.85
	1.8	4121	1132	2.95
T10	0.2	5189	858	2.35
	0.4	5114	887	2.43
	0.6	5039	918	2.52
	0.8	4944	952	2.61
	1	4805	988	2.71
	1.2	4705	1022	2.80
	1.4	4587	1064	2.92
	1.6	4456	1105	3.03
	1.8	4292	1141	3.13

10 Ton Fan Data • 180 MBH Gas Heat Exchange • Models: DFG1203D, DFG1204D, DFG1207D

Down Flow				
Speed Tap	ESP	CFM	RPM	BHP
T1	0.2	2164	529	0.37
	0.4	-	-	-
	0.6	-	-	-
	0.8	-	-	-
T2	0.2	2410	561	0.47
	0.4	2233	622	0.52
	0.6	2073	669	0.56
	0.8	-	-	-
T3	0.2	3406	693	1.03
	0.4	3307	736	1.09
	0.6	3211	778	1.16
	0.8	2987	838	1.24
T4	0.2	4183	803	1.74
	0.4	4104	841	1.82
	0.6	4000	883	1.91
	0.8	3873	923	2.00
T5	0.2	4305	821	1.89
	0.4	4221	859	1.98
	0.6	4106	903	2.08
	0.8	4004	938	2.16
T6	0.2	2175	530	0.32
	0.4	1952	611	0.37
	0.6	1742	672	0.41
	0.8	-	-	-
T7	0.2	2682	597	0.36
	0.4	2530	652	0.39
	0.6	2393	697	0.42
	0.8	2124	766	0.46
T8	0.2	3279	676	0.94
	0.4	3172	721	1.00
	0.6	3072	763	1.06
	0.8	2837	825	1.15
T9	0.2	4183	803	1.74
	0.4	4104	841	1.82
	0.6	4000	883	1.91
	0.8	3873	923	2.00
T10	0.2	4305	821	1.89
	0.4	4221	859	1.98
	0.6	4106	903	2.08
	0.8	4004	938	2.16

Horizontal Flow				
Speed Tap	ESP	CFM	RPM	BHP
T1	0.2	2304	479	0.33
	0.4	2065	562	0.39
	0.6	-	-	-
	0.8	-	-	-
T2	0.2	2549	506	0.42
	0.4	2343	582	0.49
	0.6	2162	643	0.54
	0.8	-	-	-
T3	0.2	3550	616	0.91
	0.4	3451	671	1.00
	0.6	3340	720	1.07
	0.8	3152	794	1.18
T4	0.2	4359	710	1.54
	0.4	4281	756	1.64
	0.6	4203	799	1.73
	0.8	4079	856	1.85
T5	0.2	4489	725	1.67
	0.4	4404	772	1.78
	0.6	4327	814	1.87
	0.8	4216	866	1.99
T6	0.2	2136	461	0.28
	0.4	-	-	-
	0.6	-	-	-
	0.8	-	-	-
T7	0.2	2820	535	0.32
	0.4	2649	605	0.37
	0.6	2489	662	0.40
	0.8	2251	739	0.45
T8	0.2	3421	601	0.84
	0.4	3312	659	0.92
	0.6	3193	709	0.99
	0.8	2996	784	1.09
T9	0.2	4359	710	1.54
	0.4	4281	756	1.64
	0.6	4203	799	1.73
	0.8	4079	856	1.85
T10	0.2	4489	725	1.67
	0.4	4404	772	1.78
	0.6	4327	814	1.87
	0.8	4216	866	1.99

10 Ton Fan Data • 180 MBH Gas Heat Exchange • Models: DFG1203L, DFG1204L, DFG1207L

Down Flow				
Speed Tap	ESP	CFM	RPM	BHP
T1	0.2	2410	561	0.47
	0.4	2233	622	0.52
	0.6	2073	669	0.56
	0.8	-	-	-
	1	-	-	-
	1.2	-	-	-
	1.4	-	-	-
T2	0.2	2667	595	0.59
	0.4	2514	650	0.64
	0.6	2376	696	0.69
	0.8	2105	765	0.76
	1	-	-	-
	1.2	-	-	-
	1.4	-	-	-
T3	0.2	3745	740	1.30
	0.4	3662	780	1.37
	0.6	3572	821	1.44
	0.8	3381	874	1.53
	1	3172	927	1.63
	1.2	2967	979	1.72
	1.4	2767	1020	1.79
T4	0.2	4534	856	2.22
	0.4	4433	898	2.33
	0.6	4284	944	2.45
	0.8	4241	968	2.51
	1	4141	1009	2.62
	1.2	4043	1045	2.72
	1.4	3923	1079	2.81
T5	0.2	4577	863	2.30
	0.4	4471	906	2.41
	0.6	4312	953	2.54
	0.8	4283	974	2.59
	1	4196	1014	2.70
	1.2	4110	1048	2.79
	1.4	4001	1082	2.88
T6	0.2	2567	582	0.54
	0.4	2405	639	0.59
	0.6	2259	685	0.64
	0.8	-	-	-
	1	-	-	-
	1.2	-	-	-
	1.4	-	-	-
T7	0.2	3213	667	0.90
	0.4	3103	713	0.96
	0.6	2999	756	1.02
	0.8	2760	818	1.10
	1	2529	876	1.18
	1.2	2311	930	1.25
	1.4	2121	974	1.31
T8	0.2	3756	742	1.31
	0.4	3673	781	1.38
	0.6	3584	823	1.45
	0.8	3394	875	1.54
	1	3185	928	1.64
	1.2	2981	980	1.73
	1.4	2781	1021	1.80
T9	0.2	4534	856	2.22
	0.4	4433	898	2.33
	0.6	4284	944	2.45
	0.8	4241	968	2.51
	1	4141	1009	2.62
	1.2	4043	1045	2.72
	1.4	3923	1079	2.81
T10	0.2	4577	863	2.30
	0.4	4471	906	2.41
	0.6	4312	953	2.54
	0.8	4283	974	2.59
	1	4196	1014	2.70
	1.2	4110	1048	2.79
	1.4	4001	1082	2.88

Horizontal Flow				
Speed Tap	ESP	CFM	RPM	BHP
T1	0.2	2549	506	0.42
	0.4	2343	582	0.49
	0.6	2162	643	0.54
	0.8	-	-	-
	1	-	-	-
	1.2	-	-	-
	1.4	-	-	-
T2	0.2	2805	533	0.53
	0.4	2632	604	0.60
	0.6	2471	661	0.65
	0.8	2232	738	0.73
	1	2035	796	0.79
	1.2	-	-	-
	1.4	-	-	-
T3	0.2	3899	656	1.15
	0.4	3819	705	1.24
	0.6	3726	752	1.32
	0.8	3564	820	1.44
	1	3439	856	1.50
	1.2	3120	950	1.67
	1.4	2970	983	1.72
T4	0.2	4741	757	1.97
	0.4	4629	806	2.10
	0.6	4550	848	2.20
	0.8	4465	886	2.30
	1	4392	928	2.41
	1.2	4287	969	2.52
	1.4	4193	1010	2.63
T5	0.2	4790	764	2.03
	0.4	4670	814	2.17
	0.6	4588	855	2.28
	0.8	4510	890	2.37
	1	4439	934	2.49
	1.2	4361	968	2.58
	1.4	4277	1011	2.69
T6	0.2	2705	523	0.49
	0.4	2520	595	0.55
	0.6	2351	654	0.61
	0.8	2107	730	0.68
	1	-	-	-
	1.2	-	-	-
	1.4	-	-	-
T7	0.2	3355	594	0.80
	0.4	3240	652	0.88
	0.6	3117	704	0.95
	0.8	2915	779	1.05
	1	2755	823	1.11
	1.2	2427	915	1.23
	1.4	2289	958	1.29
T8	0.2	3910	657	1.16
	0.4	3831	707	1.25
	0.6	3739	753	1.33
	0.8	3577	821	1.45
	1	3453	857	1.51
	1.2	3135	950	1.68
	1.4	2984	983	1.73
T9	0.2	4741	757	1.97
	0.4	4629	806	2.10
	0.6	4550	848	2.20
	0.8	4465	886	2.30
	1	4392	928	2.41
	1.2	4287	969	2.52
	1.4	4193	1010	2.63
T10	0.2	4790	764	2.03
	0.4	4670	814	2.17
	0.6	4588	855	2.28
	0.8	4510	890	2.37
	1	4439	934	2.49
	1.2	4361	968	2.58
	1.4	4277	1011	2.69

10 Ton Fan Data • 180 MBH Gas Heat Exchange • Models: DFG1203W, DFG1204W, DFG1207W

Down Flow				
Speed Tap	ESP	CFM	RPM	BHP
T1	0.2	2589	586	0.56
	0.4	2393	658	0.63
	0.6	2205	713	0.68
	0.8	2110	781	0.74
	1	-	-	-
	1.2	-	-	-
	1.4	-	-	-
	1.6	-	-	-
	1.8	-	-	-
T2	0.2	2818	617	0.66
	0.4	2636	684	0.73
	0.6	2459	736	0.78
	0.8	2349	801	0.85
	1	2132	858	0.91
	1.2	-	-	-
	1.4	-	-	-
	1.6	-	-	-
	1.8	-	-	-
T3	0.2	4089	788	1.41
	0.4	3978	829	1.49
	0.6	3859	868	1.56
	0.8	3682	917	1.64
	1	3518	962	1.72
	1.2	3383	998	1.79
	1.4	3211	1042	1.87
	1.6	3034	1087	1.95
	1.8	2883	1125	2.02
T4	0.2	4931	901	2.21
	0.4	4853	930	2.28
	0.6	4762	961	2.35
	0.8	4568	1003	2.46
	1	4441	1040	2.55
	1.2	4332	1075	2.63
	1.4	4205	1110	2.72
	1.6	4003	1152	2.82
	1.8	3778	1200	2.94
T5	0.2	5125	927	2.45
	0.4	5052	954	2.52
	0.6	4964	985	2.60
	0.8	4774	1025	2.71
	1	4656	1060	2.80
	1.2	4551	1095	2.90
	1.4	4435	1127	2.98
	1.6	4235	1168	3.09
	1.8	4004	1217	3.22
T6	0.2	2919	630	0.70
	0.4	2744	695	0.78
	0.6	2572	746	0.83
	0.8	2455	810	0.90
	1	2242	866	0.97
	1.2	2070	903	1.01
	1.4	-	-	-
	1.6	-	-	-
	1.8	-	-	-

Horizontal Flow				
Speed Tap	ESP	CFM	RPM	BHP
T1	0.2	2516	536	0.51
	0.4	2406	616	0.59
	0.6	2132	690	0.66
	0.8	-	-	-
	1	-	-	-
	1.2	-	-	-
	1.4	-	-	-
	1.6	-	-	-
	1.8	-	-	-
T2	0.2	2749	561	0.60
	0.4	2626	635	0.68
	0.6	2370	706	0.75
	0.8	2167	761	0.81
	1	-	-	-
	1.2	-	-	-
	1.4	-	-	-
	1.6	-	-	-
	1.8	-	-	-
T3	0.2	4056	706	1.27
	0.4	3869	753	1.35
	0.6	3705	804	1.44
	0.8	3560	850	1.52
	1	3387	901	1.62
	1.2	3201	951	1.70
	1.4	2996	1005	1.80
	1.6	2773	1056	1.89
	1.8	2562	1107	1.98
T4	0.2	4942	812	1.99
	0.4	4733	846	2.07
	0.6	4608	885	2.17
	0.8	4494	925	2.27
	1	4352	964	2.36
	1.2	4210	1007	2.47
	1.4	4039	1053	2.58
	1.6	3852	1103	2.70
	1.8	3664	1153	2.82
T5	0.2	5152	840	2.22
	0.4	4942	871	2.30
	0.6	4821	908	2.40
	0.8	4712	947	2.50
	1	4578	983	2.60
	1.2	4445	1024	2.71
	1.4	4284	1068	2.82
	1.6	4110	1117	2.95
	1.8	3931	1164	3.08
T6	0.2	2853	572	0.64
	0.4	2723	644	0.72
	0.6	2475	713	0.80
	0.8	2277	767	0.86
	1	2061	838	0.94
	1.2	-	-	-
	1.4	-	-	-
	1.6	-	-	-
	1.8	-	-	-

Down Flow				
Speed Tap	ESP	CFM	RPM	BHP
T7	0.2	3792	748	1.20
	0.4	3666	795	1.27
	0.6	3535	836	1.34
	0.8	3370	889	1.43
	1	3193	936	1.50
	1.2	3050	973	1.56
	1.4	2860	1020	1.64
	1.6	2699	1066	1.71
	1.8	2586	1098	1.76
T8	0.2	4506	844	1.76
	0.4	4414	878	1.84
	0.6	4310	913	1.91
	0.8	4120	958	2.00
	1	3974	999	2.09
	1.2	3853	1035	2.16
	1.4	3704	1074	2.25
	1.6	3510	1118	2.34
	1.8	3314	1163	2.43
T9	0.2	4931	901	2.21
	0.4	4853	930	2.28
	0.6	4762	961	2.35
	0.8	4568	1003	2.46
	1	4441	1040	2.55
	1.2	4332	1075	2.63
	1.4	4205	1110	2.72
	1.6	4003	1152	2.82
	1.8	3778	1200	2.94
T10	0.2	5125	927	2.45
	0.4	5052	954	2.52
	0.6	4964	985	2.60
	0.8	4774	1025	2.71
	1	4656	1060	2.80
	1.2	4551	1095	2.90
	1.4	4435	1127	2.98
	1.6	4235	1168	3.09
	1.8	4004	1217	3.22

Horizontal Flow				
Speed Tap	ESP	CFM	RPM	BHP
T7	0.2	3749	671	1.08
	0.4	3574	724	1.16
	0.6	3390	779	1.25
	0.8	3233	827	1.33
	1	3049	884	1.42
	1.2	2847	935	1.50
	1.4	2633	991	1.59
	1.6	2401	1041	1.67
	1.8	2185	1092	1.75
T8	0.2	4492	757	1.58
	0.4	4291	796	1.66
	0.6	4149	842	1.76
	0.8	4021	885	1.85
	1	3863	930	1.94
	1.2	3700	976	2.04
	1.4	3510	1027	2.15
	1.6	3302	1078	2.25
	1.8	3100	1129	2.36
T9	0.2	4942	812	1.99
	0.4	4733	846	2.07
	0.6	4608	885	2.17
	0.8	4494	925	2.27
	1	4352	964	2.36
	1.2	4210	1007	2.47
	1.4	4039	1053	2.58
	1.6	3852	1103	2.70
	1.8	3664	1153	2.82
T10	0.2	5152	840	2.22
	0.4	4942	871	2.30
	0.6	4821	908	2.40
	0.8	4712	947	2.50
	1	4578	983	2.60
	1.2	4445	1024	2.71
	1.4	4284	1068	2.82
	1.6	4110	1117	2.95
	1.8	3931	1164	3.08

10 Ton Fan Data • 240 MBH Gas Heat Exchange • Models: DFG1203D, DFG1204D, DFG1207D

Down Flow				
Speed Tap	**ESP**	**CFM**	**RPM**	**BHP**
T1	0.2	2169	555	0.43
	0.4	-	-	-
	0.6	-	-	-
	0.8	-	-	-
T2	0.2	2450	600	0.58
	0.4	2203	672	0.65
	0.6	2031	721	0.70
	0.8	-	-	-
T3	0.2	3421	761	1.34
	0.4	3321	797	1.40
	0.6	3197	841	1.48
	0.8	3004	896	1.57
T4	0.2	4193	895	2.36
	0.4	4099	930	2.46
	0.6	4003	962	2.54
	0.8	3908	994	2.63
T5	0.2	4287	912	2.54
	0.4	4177	951	2.65
	0.6	4083	980	2.73
	0.8	4012	1007	2.80
T6	0.2	2463	602	0.59
	0.4	2218	673	0.66
	0.6	2047	722	0.70
	0.8	-	-	-
T7	0.2	3093	706	0.69
	0.4	2954	751	0.73
	0.6	2814	798	0.78
	0.8	2605	855	0.83
T8	0.2	3620	795	1.55
	0.4	3536	827	1.61
	0.6	3420	869	1.69
	0.8	3242	921	1.79
T9	0.2	4193	895	2.36
	0.4	4099	930	2.46
	0.6	4003	962	2.54
	0.8	3908	994	2.63
T10	0.2	4287	912	2.54
	0.4	4177	951	2.65
	0.6	4083	980	2.73
	0.8	4012	1007	2.80

Horizontal Flow				
Speed Tap	**ESP**	**CFM**	**RPM**	**BHP**
T1	0.2	2325	498	0.38
	0.4	2029	592	0.46
	0.6	-	-	-
	0.8	-	-	-
T2	0.2	2623	536	0.52
	0.4	2379	615	0.59
	0.6	2138	687	0.66
	0.8	-	-	-
T3	0.2	3663	668	1.17
	0.4	3552	712	1.25
	0.6	3410	766	1.34
	0.8	3178	836	1.47
T4	0.2	4523	783	2.07
	0.4	4405	825	2.18
	0.6	4291	863	2.28
	0.8	4183	906	2.39
T5	0.2	4631	798	2.22
	0.4	4497	843	2.35
	0.6	4380	880	2.45
	0.8	4302	915	2.55
T6	0.2	2636	537	0.52
	0.4	2395	616	0.60
	0.6	2155	688	0.67
	0.8	-	-	-
T7	0.2	3308	622	0.61
	0.4	3163	676	0.66
	0.6	2992	736	0.72
	0.8	2743	808	0.79
T8	0.2	3881	696	1.36
	0.4	3782	737	1.44
	0.6	3654	786	1.53
	0.8	3439	854	1.66
T9	0.2	4523	783	2.07
	0.4	4405	825	2.18
	0.6	4291	863	2.28
	0.8	4183	906	2.39
T10	0.2	4631	798	2.22
	0.4	4497	843	2.35
	0.6	4380	880	2.45
	0.8	4302	915	2.55

10 Ton Fan Data • 240 MBH Gas Heat Exchange • Models: DFG1203L, DFG1204L, DFG1207L

Down Flow				
Speed Tap	ESP	CFM	RPM	BHP
T1	0.2	2435	597	0.56
	0.4	2205	670	0.63
	0.6	-	-	-
	0.8	-	-	-
	1	-	-	-
	1.2	-	-	-
	1.4	-	-	-
T2	0.2	2697	640	0.71
	0.4	2491	706	0.78
	0.6	2279	760	0.84
	0.8	2125	805	0.89
	1	-	-	-
	1.2	-	-	-
	1.4	-	-	-
T3	0.2	3443	762	1.25
	0.4	3299	808	1.32
	0.6	3141	852	1.39
	0.8	3002	892	1.46
	1	2825	939	1.53
	1.2	2617	991	1.62
	1.4	2459	1029	1.68
T4	0.2	4573	951	2.52
	0.4	4490	976	2.59
	0.6	4395	1006	2.67
	0.8	4284	1039	2.76
	1	4157	1075	2.85
	1.2	4011	1118	2.97
	1.4	3881	1151	3.05
T5	0.2	4708	974	2.73
	0.4	4627	998	2.80
	0.6	4538	1027	2.88
	0.8	4430	1058	2.97
	1	4311	1093	3.07
	1.2	4174	1134	3.18
	1.4	4048	1166	3.27
T6	0.2	3088	704	0.97
	0.4	2915	759	1.04
	0.6	2733	807	1.11
	0.8	2586	850	1.17
	1	2395	899	1.23
	1.2	2173	952	1.31
	1.4	2007	990	1.36
T7	0.2	3941	845	1.72
	0.4	3830	880	1.79
	0.6	3704	917	1.87
	0.8	3576	954	1.94
	1	3419	997	2.03
	1.2	3236	1046	2.13
	1.4	3088	1083	2.21
T8	0.2	4619	959	2.59
	0.4	4537	984	2.66
	0.6	4444	1013	2.74
	0.8	4334	1045	2.83
	1	4210	1081	2.92
	1.2	4067	1123	3.04
	1.4	3938	1156	3.13
T9	0.2	4573	951	2.52
	0.4	4490	976	2.59
	0.6	4395	1006	2.67
	0.8	4284	1039	2.76
	1	4157	1075	2.85
	1.2	4011	1118	2.97
	1.4	3881	1151	3.05
T10	0.2	4708	974	2.73
	0.4	4627	998	2.80
	0.6	4538	1027	2.88
	0.8	4430	1058	2.97
	1	4311	1093	3.07
	1.2	4174	1134	3.18
	1.4	4048	1166	3.27

Horizontal Flow				
Speed Tap	ESP	CFM	RPM	BHP
T1	0.2	2576	539	0.50
	0.4	2320	629	0.59
	0.6	2042	706	0.66
	0.8	-	-	-
	1	-	-	-
	1.2	-	-	-
	1.4	-	-	-
T2	0.2	2863	577	0.64
	0.4	2633	657	0.73
	0.6	2379	728	0.81
	0.8	2216	778	0.86
	1	-	-	-
	1.2	-	-	-
	1.4	-	-	-
T3	0.2	3677	687	1.12
	0.4	3514	741	1.21
	0.6	3324	795	1.30
	0.8	3182	841	1.37
	1	2977	898	1.47
	1.2	2844	938	1.53
	1.4	2563	1020	1.67
T4	0.2	4904	854	2.27
	0.4	4806	882	2.34
	0.6	4692	916	2.43
	0.8	4580	954	2.53
	1	4423	1002	2.66
	1.2	4333	1024	2.72
	1.4	4160	1067	2.83
T5	0.2	5050	874	2.45
	0.4	4954	901	2.53
	0.6	4846	933	2.62
	0.8	4737	970	2.72
	1	4589	1015	2.85
	1.2	4501	1037	2.91
	1.4	4343	1076	3.02
T6	0.2	3289	634	0.87
	0.4	3096	701	0.96
	0.6	2876	763	1.05
	0.8	2725	810	1.11
	1	2511	868	1.19
	1.2	2359	917	1.26
	1.4	2045	1013	1.39
T7	0.2	4219	760	1.55
	0.4	4091	801	1.63
	0.6	3939	845	1.72
	0.8	3811	887	1.81
	1	3622	942	1.92
	1.2	3512	972	1.98
	1.4	3277	1035	2.11
T8	0.2	4954	861	2.33
	0.4	4856	888	2.40
	0.6	4745	922	2.49
	0.8	4634	959	2.59
	1	4480	1006	2.72
	1.2	4391	1028	2.78
	1.4	4223	1070	2.89
T9	0.2	4904	854	2.27
	0.4	4806	882	2.34
	0.6	4692	916	2.43
	0.8	4580	954	2.53
	1	4423	1002	2.66
	1.2	4333	1024	2.72
	1.4	4160	1067	2.83
T10	0.2	5050	874	2.45
	0.4	4954	901	2.53
	0.6	4846	933	2.62
	0.8	4737	970	2.72
	1	4589	1015	2.85
	1.2	4501	1037	2.91
	1.4	4343	1076	3.02

10 Ton Fan Data • 240 MBH Gas Heat Exchange • Models: DFG1203W, DFG1204W, DFG1207W

Down Flow				
Speed Tap	ESP	CFM	RPM	BHP
T1	0.2	2635	630	0.67
	0.4	2423	697	0.74
	0.6	2206	752	0.80
	0.8	2051	798	0.85
	1	-	-	-
	1.2	-	-	-
	1.4	-	-	-
	1.6	-	-	-
	1.8	-	-	-
T2	0.2	2843	664	0.80
	0.4	2650	725	0.87
	0.6	2449	777	0.94
	0.8	2298	822	0.99
	1	2099	872	1.05
	1.2	-	-	-
	1.4	-	-	-
	1.6	-	-	-
	1.8	-	-	-
T3	0.2	4057	864	1.85
	0.4	3952	897	1.92
	0.6	3833	932	2.00
	0.8	3708	968	2.07
	1	3556	1011	2.16
	1.2	3378	1059	2.27
	1.4	3234	1095	2.35
	1.6	3028	1144	2.45
	1.8	2882	1176	2.52
T4	0.2	4833	996	2.95
	0.4	4753	1019	3.02
	0.6	4667	1047	3.10
	0.8	4564	1077	3.19
	1	4452	1110	3.29
	1.2	4325	1148	3.40
	1.4	4203	1179	3.49
	1.6	4016	1218	3.61
	1.8	3891	1249	3.70
T5	0.2	4912	1009	3.09
	0.4	4831	1032	3.16
	0.6	4747	1060	3.25
	0.8	4646	1090	3.34
	1	4539	1121	3.43
	1.2	4419	1157	3.55
	1.4	4300	1188	3.64
	1.6	4120	1225	3.75
	1.8	3996	1256	3.85
T6	0.2	2941	680	0.86
	0.4	2756	739	0.94
	0.6	2563	789	1.00
	0.8	2413	833	1.06
	1	2217	883	1.12
	1.2	-	-	-
	1.4	-	-	-
	1.6	-	-	-
	1.8	-	-	-

Horizontal Flow				
Speed Tap	ESP	CFM	RPM	BHP
T1	0.2	2795	568	0.60
	0.4	2558	650	0.69
	0.6	2299	723	0.77
	0.8	2134	772	0.82
	1	-	-	-
	1.2	-	-	-
	1.4	-	-	-
	1.6	-	-	-
	1.8	-	-	-
T2	0.2	3022	598	0.72
	0.4	2806	673	0.81
	0.6	2566	741	0.89
	0.8	2407	790	0.95
	1	2188	848	1.02
	1.2	2022	903	1.09
	1.4	-	-	-
	1.6	-	-	-
	1.8	-	-	-
T3	0.2	4344	777	1.66
	0.4	4224	815	1.74
	0.6	4080	857	1.84
	0.8	3955	899	1.92
	1	3770	952	2.04
	1.2	3665	980	2.10
	1.4	3441	1039	2.23
	1.6	3245	1093	2.34
	1.8	2992	1151	2.47
T4	0.2	5185	893	2.64
	0.4	5089	919	2.72
	0.6	4987	950	2.81
	0.8	4880	985	2.92
	1	4742	1029	3.05
	1.2	4656	1050	3.11
	1.4	4510	1087	3.22
	1.6	4336	1141	3.38
	1.8	4101	1201	3.56
T5	0.2	5270	905	2.77
	0.4	5173	931	2.85
	0.6	5072	961	2.95
	0.8	4968	996	3.05
	1	4836	1037	3.18
	1.2	4750	1059	3.24
	1.4	4613	1094	3.35
	1.6	4445	1147	3.51
	1.8	4220	1205	3.69
T6	0.2	3129	613	0.78
	0.4	2922	684	0.87
	0.6	2690	749	0.95
	0.8	2534	798	1.01
	1	2317	856	1.09
	1.2	2157	909	1.15
	1.4	1830	1011	1.28
	1.6	1673	1038	1.32
	1.8	1521	1063	1.35

Down Flow				
Speed Tap	ESP	CFM	RPM	BHP
T7	0.2	3666	799	1.44
	0.4	3537	840	1.52
	0.6	3394	880	1.59
	0.8	3260	919	1.66
	1	3091	965	1.74
	1.2	2894	1016	1.84
	1.4	2740	1053	1.90
	1.6	2546	1104	2.00
	1.8	2388	1136	2.05
T8	0.2	4276	901	2.11
	0.4	4182	930	2.18
	0.6	4074	963	2.26
	0.8	3955	997	2.34
	1	3813	1038	2.43
	1.2	3648	1084	2.54
	1.4	3509	1119	2.63
	1.6	3301	1166	2.74
	1.8	3162	1198	2.81
T9	0.2	4833	996	2.95
	0.4	4753	1019	3.02
	0.6	4667	1047	3.10
	0.8	4564	1077	3.19
	1	4452	1110	3.29
	1.2	4325	1148	3.40
	1.4	4203	1179	3.49
	1.6	4016	1218	3.61
	1.8	3891	1249	3.70
T10	0.2	4912	1009	3.09
	0.4	4831	1032	3.16
	0.6	4747	1060	3.25
	0.8	4646	1090	3.34
	1	4539	1121	3.43
	1.2	4419	1157	3.55
	1.4	4300	1188	3.64
	1.6	4120	1225	3.75
	1.8	3996	1256	3.85

Horizontal Flow				
Speed Tap	ESP	CFM	RPM	BHP
T7	0.2	3919	719	1.30
	0.4	3772	767	1.39
	0.6	3601	817	1.48
	0.8	3465	861	1.56
	1	3266	917	1.66
	1.2	3144	953	1.72
	1.4	2883	1026	1.85
	1.6	2695	1073	1.94
	1.8	2465	1122	2.03
T8	0.2	4582	810	1.90
	0.4	4473	843	1.98
	0.6	4343	881	2.07
	0.8	4224	921	2.16
	1	4049	973	2.28
	1.2	3952	998	2.34
	1.4	3749	1049	2.46
	1.6	3553	1106	2.59
	1.8	3294	1167	2.74
T9	0.2	5185	893	2.64
	0.4	5089	919	2.72
	0.6	4987	950	2.81
	0.8	4880	985	2.92
	1	4742	1029	3.05
	1.2	4656	1050	3.11
	1.4	4510	1087	3.22
	1.6	4336	1141	3.38
	1.8	4101	1201	3.56
T10	0.2	5270	905	2.77
	0.4	5173	931	2.85
	0.6	5072	961	2.95
	0.8	4968	996	3.05
	1	4836	1037	3.18
	1.2	4750	1059	3.24
	1.4	4613	1094	3.35
	1.6	4445	1147	3.51
	1.8	4220	1205	3.69

12.5 Ton Fan Data • 130 MBH Gas Heat Exchange • Models: DFG1503D, DFG1504D, DFG1507D

Down Flow				
Speed Tap	**ESP**	**CFM**	**RPM**	**BHP**
T1	0.2	2212	511	0.33
	0.4	1879	609	0.40
	0.6	1656	664	0.43
	0.8	1436	714	0.46
T2	0.2	2495	550	0.45
	0.4	2213	636	0.53
	0.6	2022	689	0.57
	0.8	1801	741	0.61
T3	0.2	4262	803	1.79
	0.4	4181	839	1.87
	0.6	4087	876	1.96
	0.8	3951	923	2.06
T4	0.2	4637	860	2.30
	0.4	4542	898	2.40
	0.6	4424	934	2.50
	0.8	4346	966	2.58
T5	0.2	4718	873	2.43
	0.4	4614	912	2.54
	0.6	4485	948	2.64
	0.8	4425	975	2.72
T6	0.2	1655	434	0.14
	0.4	-	-	-
	0.6	-	-	-
	0.8	-	-	-
T7	0.2	1899	468	0.15
	0.4	1505	580	0.19
	0.6	-	-	-
	0.8	-	-	-
T8	0.2	2135	500	0.30
	0.4	1787	602	0.36
	0.6	1556	658	0.40
	0.8	-	-	-
T9	0.2	4637	860	2.30
	0.4	4542	898	2.40
	0.6	4424	934	2.50
	0.8	4346	966	2.58
T10	0.2	4718	873	2.43
	0.4	4614	912	2.54
	0.6	4485	948	2.64
	0.8	4425	975	2.72

Horizontal Flow				
Speed Tap	**ESP**	**CFM**	**RPM**	**BHP**
T1	0.2	2299	481	0.31
	0.4	2056	573	0.37
	0.6	1747	660	0.43
	0.8	1568	711	0.46
T2	0.2	2587	516	0.43
	0.4	2382	596	0.49
	0.6	2116	676	0.56
	0.8	1947	728	0.60
T3	0.2	4385	747	1.67
	0.4	4313	784	1.75
	0.6	4233	825	1.84
	0.8	4131	869	1.94
T4	0.2	4767	802	2.14
	0.4	4674	843	2.25
	0.6	4592	881	2.36
	0.8	4510	917	2.45
T5	0.2	4849	815	2.27
	0.4	4746	858	2.39
	0.6	4660	896	2.50
	0.8	4583	929	2.59
T6	0.2	1732	413	0.13
	0.4	1407	529	0.17
	0.6	-	-	-
	0.8	-	-	-
T7	0.2	1981	443	0.14
	0.4	1693	548	0.18
	0.6	1332	645	0.21
	0.8	-	-	-
T8	0.2	2221	472	0.28
	0.4	1967	566	0.34
	0.6	1645	656	0.40
	0.8	1464	707	0.43
T9	0.2	4767	802	2.14
	0.4	4674	843	2.25
	0.6	4592	881	2.36
	0.8	4510	917	2.45
T10	0.2	4849	815	2.27
	0.4	4746	858	2.39
	0.6	4660	896	2.50
	0.8	4583	929	2.59

12.5 Ton Fan Data • 130 MBH Gas Heat Exchange • Models: DFG1503L, DFG1504L, DFG1507L

Down Flow				
Speed Tap	ESP	CFM	RPM	BHP
T1	0.2	2496	542	0.44
	0.4	2223	624	0.51
	0.6	1952	696	0.57
	0.8	1785	742	0.61
	1	1573	794	0.65
	1.2	1361	836	0.68
	1.4	-	-	-
T2	0.2	2788	584	0.58
	0.4	2541	657	0.65
	0.6	2296	723	0.72
	0.8	2135	769	0.76
	1	1925	820	0.81
	1.2	1726	862	0.86
	1.4	1471	907	0.90
T3	0.2	4584	843	1.93
	0.4	4466	875	2.01
	0.6	4356	911	2.09
	0.8	4233	947	2.17
	1	4059	994	2.28
	1.2	3933	1030	2.36
	1.4	3701	1077	2.47
T4	0.2	5506	981	3.25
	0.4	5413	1007	3.33
	0.6	5331	1034	3.42
	0.8	5233	1064	3.52
	1	5121	1096	3.63
	1.2	5020	1128	3.73
	1.4	4861	1162	3.85
T5	0.2	5631	1001	3.50
	0.4	5537	1028	3.60
	0.6	5452	1054	3.69
	0.8	5359	1083	3.79
	1	5261	1112	3.89
	1.2	5161	1143	4.00
	1.4	5022	1174	4.11
T6	0.2	2566	552	0.47
	0.4	2299	632	0.54
	0.6	2034	702	0.60
	0.8	1869	749	0.64
	1	1657	800	0.69
	1.2	1448	843	0.72
	1.4	-	-	-
T7	0.2	3189	641	0.80
	0.4	2975	703	0.88
	0.6	2765	762	0.95
	0.8	2611	806	1.00
	1	-	-	-
	1.2	-	-	-
	1.4	-	-	-
T8	0.2	3751	722	1.18
	0.4	3581	770	1.25
	0.6	3416	819	1.33
	0.8	3274	860	1.40
	1	3075	911	1.48
	1.2	2917	950	1.55
	1.4	2664	998	1.63
T9	0.2	5506	981	3.25
	0.4	5413	1007	3.33
	0.6	5331	1034	3.42
	0.8	5233	1064	3.52
	1	5121	1096	3.63
	1.2	5020	1128	3.73
	1.4	4861	1162	3.85
T10	0.2	5631	1001	3.50
	0.4	5537	1028	3.60
	0.6	5452	1054	3.69
	0.8	5359	1083	3.79
	1	5261	1112	3.89
	1.2	5161	1143	4.00
	1.4	5022	1174	4.11

Horizontal Flow				
Speed Tap	ESP	CFM	RPM	BHP
T1	0.2	2431	515	0.42
	0.4	2257	591	0.48
	0.6	1904	688	0.56
	0.8	1725	743	0.61
	1	1516	798	0.65
	1.2	-	-	-
	1.4	-	-	-
T2	0.2	2743	555	0.55
	0.4	2583	624	0.62
	0.6	2269	712	0.71
	0.8	2103	765	0.76
	1	1898	820	0.81
	1.2	1688	873	0.87
	1.4	1487	912	0.91
T3	0.2	4641	803	1.84
	0.4	4549	839	1.92
	0.6	4433	875	2.01
	0.8	4334	916	2.10
	1	4174	965	2.21
	1.2	4037	1007	2.31
	1.4	3877	1053	2.42
T4	0.2	5591	932	3.09
	0.4	5504	961	3.18
	0.6	5433	988	3.27
	0.8	5352	1020	3.38
	1	5247	1056	3.50
	1.2	5145	1089	3.61
	1.4	5031	1128	3.73
T5	0.2	5717	950	3.15
	0.4	5627	979	3.24
	0.6	5553	1007	3.33
	0.8	5472	1038	3.44
	1	5379	1071	3.54
	1.2	5282	1102	3.65
	1.4	5178	1139	3.77
T6	0.2	2506	525	0.45
	0.4	-	-	-
	0.6	-	-	-
	0.8	-	-	-
	1	-	-	-
	1.2	-	-	-
	1.4	-	-	-
T7	0.2	3169	610	0.76
	0.4	3027	671	0.83
	0.6	2763	745	0.93
	0.8	2614	796	0.99
	1	-	-	-
	1.2	-	-	-
	1.4	-	-	-
T8	0.2	3765	687	1.12
	0.4	3646	737	1.20
	0.6	3449	794	1.29
	0.8	3322	841	1.37
	1	3136	894	1.46
	1.2	2965	943	1.54
	1.4	2782	987	1.61
T9	0.2	5591	932	3.09
	0.4	5504	961	3.18
	0.6	5433	988	3.27
	0.8	5352	1020	3.38
	1	5247	1056	3.50
	1.2	5145	1089	3.61
	1.4	5031	1128	3.73
T10	0.2	5717	950	3.15
	0.4	5627	979	3.24
	0.6	5553	1007	3.33
	0.8	5472	1038	3.44
	1	5379	1071	3.54
	1.2	5282	1102	3.65
	1.4	5178	1139	3.77

12.5 Ton Fan Data • 130 MBH Gas Heat Exchange • Models: DFG1503W, DFG1504W, DFG1507W

Down Flow				
Speed Tap	ESP	CFM	RPM	BHP
T1	0.2	2704	572	0.54
	0.4	-	-	-
	0.6	-	-	-
	0.8	-	-	-
	1	-	-	-
	1.2	-	-	-
	1.4	-	-	-
	1.6	-	-	-
	1.8	-	-	-
T2	0.2	2947	606	0.66
	0.4	2713	675	0.74
	0.6	-	-	-
	0.8	-	-	-
	1	-	-	-
	1.2	-	-	-
	1.4	-	-	-
	1.6	-	-	-
	1.8	-	-	-
T3	0.2	4815	877	2.20
	0.4	4708	905	2.27
	0.6	4609	939	2.36
	0.8	4492	974	2.44
	1	4328	1018	2.56
	1.2	4210	1053	2.64
	1.4	3990	1098	2.76
	1.6	3782	1133	2.84
	1.8	3556	1183	2.97
T4	0.2	5720	1015	3.70
	0.4	5621	1043	3.81
	0.6	5533	1070	3.90
	0.8	5443	1098	4.01
	1	5357	1124	4.10
	1.2	5258	1154	4.21
	1.4	5136	1182	4.31
	1.6	5009	1210	4.41
	1.8	4856	1244	4.54
T5	0.2	5804	1029	3.92
	0.4	5700	1059	4.03
	0.6	5607	1086	4.13
	0.8	5520	1113	4.24
	1	5448	1136	4.33
	1.2	5349	1165	4.44
	1.4	5245	1189	4.53
	1.6	5141	1218	4.64
	1.8	5009	1247	4.75
T6	0.2	1739	435	0.17
	0.4	1397	539	0.22
	0.6	-	-	-
	0.8	-	-	-
	1	-	-	-
	1.2	-	-	-
	1.4	-	-	-
	1.6	-	-	-
	1.8	-	-	-

Horizontal Flow				
Speed Tap	ESP	CFM	RPM	BHP
T1	0.2	2653	543	0.51
	0.4	-	-	-
	0.6	-	-	-
	0.8	-	-	-
	1	-	-	-
	1.2	-	-	-
	1.4	-	-	-
	1.6	-	-	-
	1.8	-	-	-
T2	0.2	2911	577	0.63
	0.4	2759	643	0.70
	0.6	-	-	-
	0.8	-	-	-
	1	-	-	-
	1.2	-	-	-
	1.4	-	-	-
	1.6	-	-	-
	1.8	-	-	-
T3	0.2	4881	835	2.10
	0.4	4794	868	2.18
	0.6	4695	900	2.26
	0.8	4603	939	2.36
	1	4453	985	2.47
	1.2	4325	1026	2.58
	1.4	4174	1072	2.69
	1.6	3966	1118	2.81
	1.8	3748	1164	2.92
T4	0.2	5805	963	3.51
	0.4	5711	992	3.62
	0.6	5632	1022	3.73
	0.8	5550	1052	3.84
	1	5468	1082	3.95
	1.2	5374	1112	4.06
	1.4	5278	1146	4.18
	1.6	5171	1180	4.30
	1.8	5045	1214	4.43
T5	0.2	5888	975	3.71
	0.4	5788	1006	3.83
	0.6	5703	1038	3.95
	0.8	5619	1067	4.06
	1	5548	1094	4.16
	1.2	5457	1122	4.27
	1.4	5370	1153	4.39
	1.6	5285	1186	4.51
	1.8	5182	1219	4.64
T6	0.2	1623	412	0.16
	0.4	1408	505	0.20
	0.6	-	-	-
	0.8	-	-	-
	1	-	-	-
	1.2	-	-	-
	1.4	-	-	-
	1.6	-	-	-
	1.8	-	-	-

Down Flow				
Speed Tap	ESP	CFM	RPM	BHP
T7	0.2	2209	501	0.33
	0.4	1911	591	0.39
	0.6	1612	669	0.44
	0.8	1440	717	0.47
	1	-	-	-
	1.2	-	-	-
	1.4	-	-	-
	1.6	-	-	-
	1.8	-	-	-
T8	0.2	2652	564	0.51
	0.4	2393	641	0.58
	0.6	2136	710	0.65
	0.8	1972	756	0.69
	1	1761	808	0.74
	1.2	1556	850	0.77
	1.4	-	-	-
	1.6	-	-	-
	1.8	-	-	-
T9	0.2	5720	1015	3.70
	0.4	5621	1043	3.81
	0.6	5533	1070	3.90
	0.8	5443	1098	4.01
	1	5357	1124	4.10
	1.2	5258	1154	4.21
	1.4	5136	1182	4.31
	1.6	5009	1210	4.41
	1.8	4856	1244	4.54
T10	0.2	5804	1029	3.92
	0.4	5700	1059	4.03
	0.6	5607	1086	4.13
	0.8	5520	1113	4.24
	1	5448	1136	4.33
	1.2	5349	1165	4.44
	1.4	5245	1189	4.53
	1.6	5141	1218	4.64
	1.8	5009	1247	4.75

Horizontal Flow				
Speed Tap	ESP	CFM	RPM	BHP
T7	0.2	2125	476	0.31
	0.4	1936	558	0.37
	0.6	1545	666	0.44
	0.8	1353	723	0.47
	1	-	-	-
	1.2	-	-	-
	1.4	-	-	-
	1.6	-	-	-
	1.8	-	-	-
T8	0.2	2598	536	0.49
	0.4	2431	609	0.55
	0.6	2099	701	0.64
	0.8	1927	755	0.69
	1	1721	810	0.74
	1.2	1505	864	0.79
	1.4	-	-	-
	1.6	-	-	-
	1.8	-	-	-
T9	0.2	5805	963	3.51
	0.4	5711	992	3.62
	0.6	5632	1022	3.73
	0.8	5550	1052	3.84
	1	5468	1082	3.95
	1.2	5374	1112	4.06
	1.4	5278	1146	4.18
	1.6	5171	1180	4.30
	1.8	5045	1214	4.43
T10	0.2	5888	975	3.71
	0.4	5788	1006	3.83
	0.6	5703	1038	3.95
	0.8	5619	1067	4.06
	1	5548	1094	4.16
	1.2	5457	1122	4.27
	1.4	5370	1153	4.39
	1.6	5285	1186	4.51
	1.8	5182	1219	4.64

12.5 Ton Fan Data • 180 MBH Gas Heat Exchange • Models: DFG1503D, DFG1504D, DFG1507D

Down Flow				
Speed Tap	**ESP**	**CFM**	**RPM**	**BHP**
T1	0.2	2193	557	0.39
	0.4	1887	633	0.45
	0.6	1669	689	0.49
	0.8	1468	736	0.52
T2	0.2	2471	600	0.53
	0.4	2214	666	0.59
	0.6	2000	721	0.64
	0.8	1783	773	0.68
T3	0.2	4276	902	2.24
	0.4	4194	935	2.32
	0.6	4090	964	2.39
	0.8	3950	999	2.48
T4	0.2	4410	929	2.48
	0.4	4318	963	2.57
	0.6	4236	988	2.64
	0.8	4130	1015	2.71
T5	0.2	4486	944	2.63
	0.4	4384	980	2.73
	0.6	4317	1002	2.79
	0.8	4234	1023	2.85
T6	0.2	1953	521	0.29
	0.4	-	-	-
	0.6	-	-	-
	0.8	-	-	-
T7	0.2	2464	599	0.33
	0.4	2206	665	0.37
	0.6	1991	720	0.40
	0.8	-	-	-
T8	0.2	2927	671	0.81
	0.4	2743	724	0.87
	0.6	2538	775	0.93
	0.8	-	-	-
T9	0.2	4410	929	2.48
	0.4	4318	963	2.57
	0.6	4236	988	2.64
	0.8	4130	1015	2.71
T10	0.2	4486	944	2.63
	0.4	4384	980	2.73
	0.6	4317	1002	2.79
	0.8	4234	1023	2.85

Horizontal Flow				
Speed Tap	**ESP**	**CFM**	**RPM**	**BHP**
T1	0.2	2396	493	0.35
	0.4	2214	572	0.40
	0.6	1870	666	0.47
	0.8	1703	718	0.51
T2	0.2	2687	529	0.47
	0.4	2527	601	0.53
	0.6	2243	684	0.61
	0.8	2086	736	0.65
T3	0.2	4645	783	1.94
	0.4	4562	820	2.04
	0.6	4489	860	2.14
	0.8	4400	902	2.24
T4	0.2	4802	805	2.15
	0.4	4715	841	2.25
	0.6	4629	883	2.36
	0.8	4545	921	2.46
T5	0.2	4892	818	2.28
	0.4	4801	854	2.38
	0.6	4703	897	2.50
	0.8	4623	933	2.60
T6	0.2	2147	462	0.26
	0.4	1944	548	0.31
	0.6	-	-	-
	0.8	-	-	-
T7	0.2	2680	528	0.29
	0.4	2519	601	0.33
	0.6	2234	684	0.38
	0.8	2076	736	0.41
T8	0.2	3168	589	0.71
	0.4	3039	651	0.79
	0.6	2844	717	0.87
	0.8	2703	769	0.93
T9	0.2	4802	805	2.15
	0.4	4715	841	2.25
	0.6	4629	883	2.36
	0.8	4545	921	2.46
T10	0.2	4892	818	2.28
	0.4	4801	854	2.38
	0.6	4703	897	2.50
	0.8	4623	933	2.60

12.5 Ton Fan Data • 180 MBH Gas Heat Exchange • Models: DFG1503L, DFG1504L, DFG1507L

Down Flow				
Speed Tap	ESP	CFM	RPM	BHP
T1	0.2	2460	566	0.49
	0.4	2245	640	0.55
	0.6	1998	704	0.61
	0.8	1829	749	0.64
	1	1623	796	0.68
	1.2	1451	851	0.73
	1.4	-	-	-
T2	0.2	2715	603	0.61
	0.4	2518	671	0.68
	0.6	2289	731	0.74
	0.8	2123	775	0.78
	1	1918	822	0.83
	1.2	1748	873	0.88
	1.4	1547	911	0.92
T3	0.2	4558	880	2.05
	0.4	4466	910	2.12
	0.6	4344	944	2.20
	0.8	4202	979	2.28
	1	4028	1020	2.37
	1.2	3881	1050	2.44
	1.4	3699	1093	2.54
T4	0.2	5562	1041	3.63
	0.4	5487	1067	3.72
	0.6	5385	1092	3.81
	0.8	5265	1121	3.91
	1	5139	1150	4.01
	1.2	5008	1175	4.10
	1.4	4883	1208	4.22
T5	0.2	5665	1058	3.88
	0.4	5586	1086	3.98
	0.6	5481	1111	4.08
	0.8	5364	1140	4.18
	1	5247	1166	4.28
	1.2	5119	1192	4.37
	1.4	5005	1222	4.48
T6	0.2	2809	617	0.66
	0.4	2618	683	0.73
	0.6	2396	741	0.79
	0.8	2231	785	0.84
	1	2026	831	0.89
	1.2	1858	882	0.94
	1.4	1657	920	0.98
T7	0.2	3566	730	1.13
	0.4	3424	778	1.21
	0.6	3249	825	1.28
	0.8	3093	865	1.34
	1	2898	910	1.41
	1.2	2738	951	1.48
	1.4	2539	993	1.54
T8	0.2	4220	829	1.69
	0.4	4114	864	1.76
	0.6	3975	902	1.84
	0.8	3829	939	1.91
	1	3645	982	2.00
	1.2	3494	1015	2.07
	1.4	3303	1058	2.16
T9	0.2	5562	1041	3.63
	0.4	5487	1067	3.72
	0.6	5385	1092	3.81
	0.8	5265	1121	3.91
	1	5139	1150	4.01
	1.2	5008	1175	4.10
	1.4	4883	1208	4.22
T10	0.2	5665	1058	3.88
	0.4	5586	1086	3.98
	0.6	5481	1111	4.08
	0.8	5364	1140	4.18
	1	5247	1166	4.28
	1.2	5119	1192	4.37
	1.4	5005	1222	4.48

Horizontal Flow				
Speed Tap	ESP	CFM	RPM	BHP
T1	0.2	2601	527	0.45
	0.4	2405	600	0.52
	0.6	2146	679	0.58
	0.8	1920	747	0.64
	1	1759	793	0.68
	1.2	1506	863	0.74
	1.4	1410	906	0.78
T2	0.2	2859	560	0.56
	0.4	2677	627	0.63
	0.6	2444	701	0.71
	0.8	2235	765	0.77
	1	2078	811	0.82
	1.2	1835	880	0.89
	1.4	1732	921	0.93
T3	0.2	4729	802	1.87
	0.4	4634	839	1.95
	0.6	4543	874	2.03
	0.8	4440	916	2.13
	1	4319	957	2.23
	1.2	4161	1013	2.36
	1.4	4030	1044	2.43
T4	0.2	5756	944	3.29
	0.4	5672	974	3.40
	0.6	5597	1003	3.50
	0.8	5519	1035	3.61
	1	5427	1069	3.73
	1.2	5333	1101	3.84
	1.4	5236	1131	3.95
T5	0.2	5862	960	3.52
	0.4	5775	990	3.63
	0.6	5692	1021	3.75
	0.8	5612	1052	3.86
	1	5526	1084	3.98
	1.2	5440	1112	4.08
	1.4	5353	1143	4.19
T6	0.2	2955	572	0.61
	0.4	2778	638	0.68
	0.6	2553	709	0.75
	0.8	2350	772	0.82
	1	2195	817	0.87
	1.2	1956	887	0.94
	1.4	1851	927	0.99
T7	0.2	3722	670	1.04
	0.4	3585	722	1.12
	0.6	3426	776	1.20
	0.8	3271	829	1.29
	1	3129	874	1.36
	1.2	2923	939	1.46
	1.4	2800	975	1.51
T8	0.2	4386	757	1.54
	0.4	4278	798	1.63
	0.6	4168	839	1.71
	0.8	4049	884	1.80
	1	3920	927	1.89
	1.2	3744	987	2.01
	1.4	3614	1020	2.08
T9	0.2	5756	944	3.29
	0.4	5672	974	3.40
	0.6	5597	1003	3.50
	0.8	5519	1035	3.61
	1	5427	1069	3.73
	1.2	5333	1101	3.84
	1.4	5236	1131	3.95
T10	0.2	5862	960	3.52
	0.4	5775	990	3.63
	0.6	5692	1021	3.75
	0.8	5612	1052	3.86
	1	5526	1084	3.98
	1.2	5440	1112	4.08
	1.4	5353	1143	4.19

12.5 Ton Fan Data • 180 MBH Gas Heat Exchange • Models: DFG1503W, DFG1504W, DFG1507W

Down Flow				
Speed Tap	ESP	CFM	RPM	BHP
T1	0.2	2636	592	0.57
	0.4	2434	661	0.64
	0.6	2200	723	0.70
	0.8	2033	767	0.74
	1	1827	814	0.8
	1.2	1657	866	0.8
	1.4	1456	904	0.9
	1.6	-	-	-
	1.8	-	-	-
T2	0.2	2868	626	0.69
	0.4	2682	690	0.76
	0.6	2463	748	0.82
	0.8	2299	791	0.87
	1	2095	838	0.92
	1.2	1927	887	0.98
	1.4	1726	926	1.02
	1.6	1468	998	1.10
	1.8	-	-	-
T3	0.2	4839	924	2.40
	0.4	4758	951	2.46
	0.6	4646	982	2.54
	0.8	4510	1015	2.63
	1	4345	1054	2.73
	1.2	4202	1081	2.80
	1.4	4029	1123	2.91
	1.6	3885	1146	2.97
	1.8	3666	1188	3.08
T4	0.2	5692	1063	3.95
	0.4	5611	1092	4.06
	0.6	5505	1117	4.15
	0.8	5389	1145	4.26
	1	5275	1170	4.35
	1.2	5147	1197	4.45
	1.4	5038	1226	4.56
	1.6	4884	1248	4.64
	1.8	4725	1269	4.72
T5	0.2	5813	1085	4.32
	0.4	5722	1118	4.46
	0.6	5608	1143	4.56
	0.8	5497	1171	4.67
	1	5398	1192	4.75
	1.2	5274	1220	4.86
	1.4	5184	1244	4.96
	1.6	5015	1271	5.07
	1.8	4884	1282	5.11
T6	0.2	2893	630	0.70
	0.4	2709	693	0.77
	0.6	-	-	-
	0.8	-	-	-
	1	-	-	-
	1.2	-	-	-
	1.4	-	-	-
	1.6	-	-	-
	1.8	-	-	-

Horizontal Flow				
Speed Tap	ESP	CFM	RPM	BHP
T1	0.2	2780	550	0.53
	0.4	2594	619	0.60
	0.6	2353	694	0.67
	0.8	2138	760	0.73
	1	1980	805	0.77
	1.2	1734	875	0.84
	1.4	1633	916	0.88
	1.6	1417	969	0.93
	1.8	-	-	-
T2	0.2	3015	580	0.64
	0.4	2841	644	0.71
	0.6	2622	714	0.79
	0.8	2423	776	0.85
	1	2269	822	0.90
	1.2	2032	891	0.98
	1.4	1925	931	1.02
	1.6	1704	985	1.08
	1.8	1495	1056	1.163
T3	0.2	5016	841	2.18
	0.4	4928	874	2.27
	0.6	4851	906	2.35
	0.8	4759	944	2.45
	1	4645	984	2.55
	1.2	4503	1036	2.68
	1.4	4375	1066	2.76
	1.6	4176	1120	2.90
	1.8	4032	1155	2.99
T4	0.2	5890	964	3.59
	0.4	5801	995	3.70
	0.6	5716	1026	3.82
	0.8	5636	1057	3.93
	1	5550	1089	4.05
	1.2	5467	1115	4.15
	1.4	5383	1146	4.26
	1.6	5301	1178	4.38
	1.8	5199	1212	4.51
T5	0.2	6016	984	3.92
	0.4	5919	1017	4.05
	0.6	5818	1052	4.19
	0.8	5731	1081	4.31
	1	5652	1111	4.43
	1.2	5582	1129	4.50
	1.4	5516	1162	4.63
	1.6	5473	1186	4.73
	1.8	5380	1223	4.88
T6	0.2	3040	583	0.65
	0.4	2868	647	0.72
	0.6	2651	716	0.80
	0.8	-	-	-
	1	-	-	-
	1.2	-	-	-
	1.4	-	-	-
	1.6	-	-	-
	1.8	-	-	-

Down Flow				
Speed Tap	ESP	CFM	RPM	BHP
T7	0.2	3491	719	1.08
	0.4	3344	768	1.15
	0.6	3165	817	1.23
	0.8	3009	857	1.29
	1	2812	903	1.35
	1.2	2652	944	1.42
	1.4	-	-	-
	1.6	-	-	-
	1.8	-	-	-
T8	0.2	4636	893	2.14
	0.4	4548	921	2.21
	0.6	4429	955	2.29
	0.8	4289	989	2.37
	1	4117	1030	2.47
	1.2	3971	1058	2.54
	1.4	3791	1101	2.64
	1.6	3641	1127	2.70
	1.8	3419	1170	2.80
T9	0.2	5692	1063	3.95
	0.4	5611	1092	4.06
	0.6	5505	1117	4.15
	0.8	5389	1145	4.26
	1	5275	1170	4.35
	1.2	5147	1197	4.45
	1.4	5038	1226	4.56
	1.6	4884	1248	4.64
	1.8	4725	1269	4.72
T10	0.2	5813	1085	4.32
	0.4	5722	1118	4.46
	0.6	5608	1143	4.56
	0.8	5497	1171	4.67
	1	5398	1192	4.75
	1.2	5274	1220	4.86
	1.4	5184	1244	4.96
	1.6	5015	1271	5.07
	1.8	4884	1282	5.11

Horizontal Flow				
Speed Tap	ESP	CFM	RPM	BHP
T7	0.2	3646	661	0.99
	0.4	3505	714	1.07
	0.6	3341	769	1.15
	0.8	3181	823	1.24
	1	3038	868	1.30
	1.2	2828	934	1.40
	1.4	2706	970	1.46
	1.6	2476	1028	1.54
	1.8	2286	1085	1.63
T8	0.2	4810	813	1.95
	0.4	4716	849	2.04
	0.6	4630	883	2.12
	0.8	4530	923	2.21
	1	4411	964	2.31
	1.2	4257	1019	2.44
	1.4	4127	1050	2.52
	1.6	3916	1107	2.65
	1.8	3765	1143	2.74
T9	0.2	5890	964	3.59
	0.4	5801	995	3.70
	0.6	5716	1026	3.82
	0.8	5636	1057	3.93
	1	5550	1089	4.05
	1.2	5467	1115	4.15
	1.4	5383	1146	4.26
	1.6	5301	1178	4.38
	1.8	5199	1212	4.51
T10	0.2	6016	984	3.92
	0.4	5919	1017	4.05
	0.6	5818	1052	4.19
	0.8	5731	1081	4.31
	1	5652	1111	4.43
	1.2	5582	1129	4.50
	1.4	5516	1162	4.63
	1.6	5473	1186	4.73
	1.8	5380	1223	4.88

12.5 Ton Fan Data • 240 MBH Gas Heat Exchange • Models: DFG1503D, DFG1504D, DFG1507D

Down Flow				
Speed Tap	**ESP**	**CFM**	**RPM**	**BHP**
T1	0.2	2201	591	0.45
	0.4	1963	656	0.50
	0.6	1757	707	0.54
	0.8	1557	750	0.57
T2	0.2	2378	617	0.54
	0.4	2159	678	0.60
	0.6	1952	730	0.64
	0.8	1745	776	0.68
T3	0.2	4170	910	2.26
	0.4	4067	938	2.33
	0.6	3941	974	2.42
	0.8	3784	1010	2.51
T4	0.2	4268	929	2.44
	0.4	4162	956	2.51
	0.6	4051	988	2.59
	0.8	3913	1020	2.67
T5	0.2	4371	951	2.65
	0.4	4259	977	2.72
	0.6	4168	1003	2.79
	0.8	4054	1028	2.86
T6	0.2	2714	668	0.74
	0.4	2528	721	0.80
	0.6	-	-	-
	0.8	-	-	-
T7	0.2	3440	782	0.87
	0.4	3314	820	0.91
	0.6	3126	872	0.97
	0.8	2907	924	1.03
T8	0.2	4006	879	2.00
	0.4	3903	908	2.07
	0.6	3756	950	2.16
	0.8	3576	993	2.26
T9	0.2	4268	929	2.44
	0.4	4162	956	2.51
	0.6	4051	988	2.59
	0.8	3913	1020	2.67
T10	0.2	4371	951	2.65
	0.4	4259	977	2.72
	0.6	4168	1003	2.79
	0.8	4054	1028	2.86

Horizontal Flow				
Speed Tap	**ESP**	**CFM**	**RPM**	**BHP**
T1	0.2	2476	505	0.39
	0.4	2292	578	0.44
	0.6	1965	670	0.51
	0.8	1791	722	0.55
T2	0.2	2659	527	0.46
	0.4	2489	596	0.53
	0.6	2199	680	0.60
	0.8	2035	733	0.65
T3	0.2	4604	774	1.92
	0.4	4518	814	2.02
	0.6	4442	853	2.12
	0.8	4348	895	2.22
T4	0.2	4722	790	2.07
	0.4	4634	830	2.18
	0.6	4549	870	2.28
	0.8	4458	910	2.39
T5	0.2	4849	808	2.25
	0.4	4757	848	2.36
	0.6	4656	891	2.48
	0.8	4566	928	2.58
T6	0.2	3008	570	0.63
	0.4	2862	632	0.70
	0.6	2640	702	0.78
	0.8	-	-	-
T7	0.2	3781	666	0.74
	0.4	3677	715	0.80
	0.6	3569	762	0.85
	0.8	3451	812	0.90
T8	0.2	4412	748	1.70
	0.4	4326	790	1.80
	0.6	4255	828	1.88
	0.8	4157	872	1.98
T9	0.2	4722	790	2.07
	0.4	4634	830	2.18
	0.6	4549	870	2.28
	0.8	4458	910	2.39
T10	0.2	4849	808	2.25
	0.4	4757	848	2.36
	0.6	4656	891	2.48
	0.8	4566	928	2.58

12.5 Ton Fan Data • 240 MBH Gas Heat Exchange • Models: DFG1503L, DFG1504L, DFG1507L

Down Flow				
Speed Tap	ESP	CFM	RPM	BHP
T1	0.2	2551	625	0.60
	0.4	2345	687	0.66
	0.6	2139	741	0.71
	0.8	1985	786	0.76
	1	1804	845	0.81
	1.2	1670	884	0.85
	1.4	1432	952	0.92
T2	0.2	2682	647	0.68
	0.4	2484	706	0.74
	0.6	2284	758	0.79
	0.8	2132	802	0.84
	1	1953	860	0.90
	1.2	1817	898	0.94
	1.4	1583	963	1.01
T3	0.2	4560	959	2.40
	0.4	4456	983	2.46
	0.6	4332	1015	2.54
	0.8	4209	1048	2.62
	1	4064	1081	2.70
	1.2	3916	1111	2.78
	1.4	3749	1141	2.85
T4	0.2	5492	1121	4.20
	0.4	5399	1146	4.29
	0.6	5306	1171	4.39
	0.8	5185	1195	4.48
	1	5083	1218	4.56
	1.2	4962	1240	4.65
	1.4	4836	1260	4.72
T5	0.2	5600	1141	4.55
	0.4	5503	1169	4.66
	0.6	5412	1194	4.76
	0.8	5289	1216	4.85
	1	5197	1239	4.94
	1.2	5084	1260	5.02
	1.4	4965	1280	5.10
T6	0.2	3326	753	1.11
	0.4	3165	798	1.18
	0.6	2992	842	1.24
	0.8	2851	883	1.30
	1	2681	932	1.37
	1.2	2536	968	1.43
	1.4	-	-	-
T7	0.2	4117	885	1.85
	0.4	3995	915	1.91
	0.6	3854	951	1.99
	0.8	3726	987	2.06
	1	3570	1025	2.14
	1.2	3421	1057	2.21
	1.4	3237	1095	2.29
T8	0.2	4756	992	2.68
	0.4	4658	1015	2.75
	0.6	4542	1045	2.83
	0.8	4420	1076	2.91
	1	4282	1107	2.99
	1.2	4136	1135	3.07
	1.4	3977	1163	3.15
T9	0.2	5492	1121	4.20
	0.4	5399	1146	4.29
	0.6	5306	1171	4.39
	0.8	5185	1195	4.48
	1	5083	1218	4.56
	1.2	4962	1240	4.65
	1.4	4836	1260	4.72
T10	0.2	5600	1141	4.55
	0.4	5503	1169	4.66
	0.6	5412	1194	4.76
	0.8	5289	1216	4.85
	1	5197	1239	4.94
	1.2	5084	1260	5.02
	1.4	4965	1280	5.10

Horizontal Flow				
Speed Tap	ESP	CFM	RPM	BHP
T1	0.2	2756	547	0.53
	0.4	2597	613	0.59
	0.6	2292	707	0.68
	0.8	2146	758	0.73
	1	1968	810	0.78
	1.2	1759	865	0.83
	1.4	1574	896	0.86
T2	0.2	2896	565	0.59
	0.4	2742	629	0.66
	0.6	2455	718	0.75
	0.8	2313	768	0.80
	1	2135	820	0.86
	1.2	1933	875	0.91
	1.4	1749	908	0.95
T3	0.2	4898	828	2.07
	0.4	4805	863	2.16
	0.6	4717	894	2.23
	0.8	4624	933	2.33
	1	4488	981	2.45
	1.2	4370	1024	2.56
	1.4	4229	1071	2.68
T4	0.2	5877	971	3.64
	0.4	5792	999	3.74
	0.6	5711	1030	3.86
	0.8	5632	1061	3.97
	1	5564	1089	4.08
	1.2	5480	1118	4.19
	1.4	5393	1150	4.31
T5	0.2	5989	990	3.95
	0.4	5900	1018	4.06
	0.6	5803	1055	4.20
	0.8	5723	1084	4.32
	1	5672	1107	4.41
	1.2	5591	1133	4.52
	1.4	5516	1159	4.62
T6	0.2	3585	653	0.96
	0.4	3454	707	1.04
	0.6	3247	772	1.14
	0.8	3124	819	1.21
	1	2954	872	1.29
	1.2	2781	923	1.36
	1.4	2609	964	1.42
T7	0.2	4428	764	1.60
	0.4	4323	805	1.68
	0.6	4199	846	1.77
	0.8	4097	888	1.86
	1	3945	939	1.96
	1.2	3808	986	2.06
	1.4	3653	1033	2.16
T8	0.2	5106	857	2.32
	0.4	5017	889	2.41
	0.6	4940	917	2.48
	0.8	4851	955	2.58
	1	4724	1001	2.71
	1.2	4615	1041	2.82
	1.4	4482	1088	2.94
T9	0.2	5877	971	3.64
	0.4	5792	999	3.74
	0.6	5711	1030	3.86
	0.8	5632	1061	3.97
	1	5564	1089	4.08
	1.2	5480	1118	4.19
	1.4	5393	1150	4.31
T10	0.2	5989	990	3.95
	0.4	5900	1018	4.06
	0.6	5803	1055	4.20
	0.8	5723	1084	4.32
	1	5672	1107	4.41
	1.2	5591	1133	4.52
	1.4	5516	1159	4.62

12.5 Ton Fan Data • 240 MBH Gas Heat Exchange • Models: DFG1503W, DFG1504W, DFG1507W

Down Flow				
Speed Tap	ESP	CFM	RPM	BHP
T1	0.2	2551	625	0.60
	0.4	2345	687	0.66
	0.6	2139	741	0.71
	0.8	1985	786	0.76
	1	1804	845	0.81
	1.2	1670	884	0.85
	1.4	1432	952	0.92
	1.6	-	-	-
	1.8	-	-	-
T2	0.2	2826	671	0.76
	0.4	2637	726	0.83
	0.6	2443	776	0.88
	0.8	2294	820	0.93
	1	2116	876	1.00
	1.2	1978	913	1.04
	1.4	1749	976	1.11
	1.6	1596	1005	1.14
	1.8	1396	1022	1.162
T3	0.2	4825	1004	2.79
	0.4	4729	1026	2.85
	0.6	4615	1056	2.94
	0.8	4495	1086	3.02
	1	4359	1116	3.11
	1.2	4214	1144	3.18
	1.4	4057	1171	3.26
	1.6	3852	1206	3.36
	1.8	3684	1239	3.45
T4	0.2	5509	1124	4.25
	0.4	5416	1149	4.35
	0.6	5323	1174	4.44
	0.8	5202	1198	4.53
	1	5102	1221	4.62
	1.2	4982	1243	4.70
	1.4	4857	1263	4.78
	1.6	4731	1284	4.86
	1.8	4590	1304	4.93
T5	0.2	5600	1141	4.55
	0.4	5503	1169	4.66
	0.6	5412	1194	4.76
	0.8	5289	1216	4.85
	1	5197	1239	4.94
	1.2	5084	1260	5.02
	1.4	4965	1280	5.10
	1.6	4866	1296	5.17
	1.8	4731	1311	5.23
T6	0.2	3028	704	0.89
	0.4	2851	755	0.96
	0.6	2665	803	1.02
	0.8	2520	845	1.07
	1	-	-	-
	1.2	-	-	-
	1.4	-	-	-
	1.6	-	-	-
	1.8	-	-	-

Horizontal Flow				
Speed Tap	ESP	CFM	RPM	BHP
T1	0.2	2756	547	0.53
	0.4	2597	613	0.59
	0.6	2292	707	0.68
	0.8	2146	758	0.73
	1	1968	810	0.78
	1.2	1759	865	0.83
	1.4	1574	896	0.86
	1.6	1422	968	0.93
	1.8	1344	1023	0.98
T2	0.2	3051	585	0.66
	0.4	2902	646	0.73
	0.6	2633	729	0.83
	0.8	2496	779	0.89
	1	2319	832	0.95
	1.2	2123	886	1.01
	1.4	1942	920	1.05
	1.6	1780	989	1.12
	1.8	1677	1044	1.186
T3	0.2	5179	867	2.41
	0.4	5091	899	2.50
	0.6	5018	926	2.58
	0.8	4930	963	2.68
	1	4807	1008	2.80
	1.2	4700	1048	2.92
	1.4	4570	1094	3.04
	1.6	4405	1136	3.16
	1.8	4222	1182	3.29
T4	0.2	5896	974	3.68
	0.4	5810	1002	3.79
	0.6	5727	1034	3.91
	0.8	5647	1065	4.03
	1	5582	1092	4.13
	1.2	5499	1120	4.24
	1.4	5413	1152	4.36
	1.6	5332	1185	4.48
	1.8	5240	1219	4.61
T5	0.2	5989	990	3.95
	0.4	5900	1018	4.06
	0.6	5803	1055	4.20
	0.8	5723	1084	4.32
	1	5672	1107	4.41
	1.2	5591	1133	4.52
	1.4	5516	1159	4.62
	1.6	5460	1191	4.75
	1.8	5400	1222	4.87
T6	0.2	3267	612	0.78
	0.4	3126	671	0.85
	0.6	2883	746	0.95
	0.8	2751	795	1.01
	1	2577	848	1.08
	1.2	-	-	-
	1.4	-	-	-
	1.6	-	-	-
	1.8	-	-	-

Down Flow				
Speed Tap	ESP	CFM	RPM	BHP
T7	0.2	4234	904	1.98
	0.4	4117	933	2.04
	0.6	3981	968	2.12
	0.8	3854	1003	2.20
	1	3701	1040	2.28
	1.2	3552	1071	2.35
	1.4	3372	1107	2.43
	1.6	3160	1144	2.51
	1.8	2978	1177	2.58
T8	0.2	5098	1051	3.27
	0.4	5007	1072	3.34
	0.6	4903	1100	3.43
	0.8	4783	1128	3.51
	1	4658	1155	3.60
	1.2	4519	1181	3.68
	1.4	4374	1204	3.75
	1.6	4186	1236	3.85
	1.8	4026	1266	3.94
T9	0.2	5509	1124	4.25
	0.4	5416	1149	4.35
	0.6	5323	1174	4.44
	0.8	5202	1198	4.53
	1	5102	1221	4.62
	1.2	4982	1243	4.70
	1.4	4857	1263	4.78
	1.6	4731	1284	4.86
	1.8	4590	1304	4.93
T10	0.2	5600	1141	4.55
	0.4	5503	1169	4.66
	0.6	5412	1194	4.76
	0.8	5289	1216	4.85
	1	5197	1239	4.94
	1.2	5084	1260	5.02
	1.4	4965	1280	5.10
	1.6	4866	1296	5.17
	1.8	4731	1311	5.23

Horizontal Flow				
Speed Tap	ESP	CFM	RPM	BHP
T7	0.2	4552	781	1.71
	0.4	4451	820	1.80
	0.6	4338	858	1.88
	0.8	4238	900	1.97
	1	4089	950	2.08
	1.2	3957	996	2.18
	1.4	3806	1043	2.29
	1.6	3622	1093	2.40
	1.8	3434	1143	2.51
T8	0.2	5466	908	2.83
	0.4	5382	937	2.92
	0.6	5316	963	3.00
	0.8	5233	998	3.11
	1	5127	1038	3.23
	1.2	5031	1074	3.35
	1.4	4914	1117	3.48
	1.6	4770	1156	3.60
	1.8	4605	1198	3.73
T9	0.2	5896	974	3.68
	0.4	5810	1002	3.79
	0.6	5727	1034	3.91
	0.8	5647	1065	4.03
	1	5582	1092	4.13
	1.2	5499	1120	4.24
	1.4	5413	1152	4.36
	1.6	5332	1185	4.48
	1.8	5240	1219	4.61
T10	0.2	5989	990	3.95
	0.4	5900	1018	4.06
	0.6	5803	1055	4.20
	0.8	5723	1084	4.32
	1	5672	1107	4.41
	1.2	5591	1133	4.52
	1.4	5516	1159	4.62
	1.6	5460	1191	4.75
	1.8	5400	1222	4.87

7.5 - 8.5 Ton blower Fan Curve

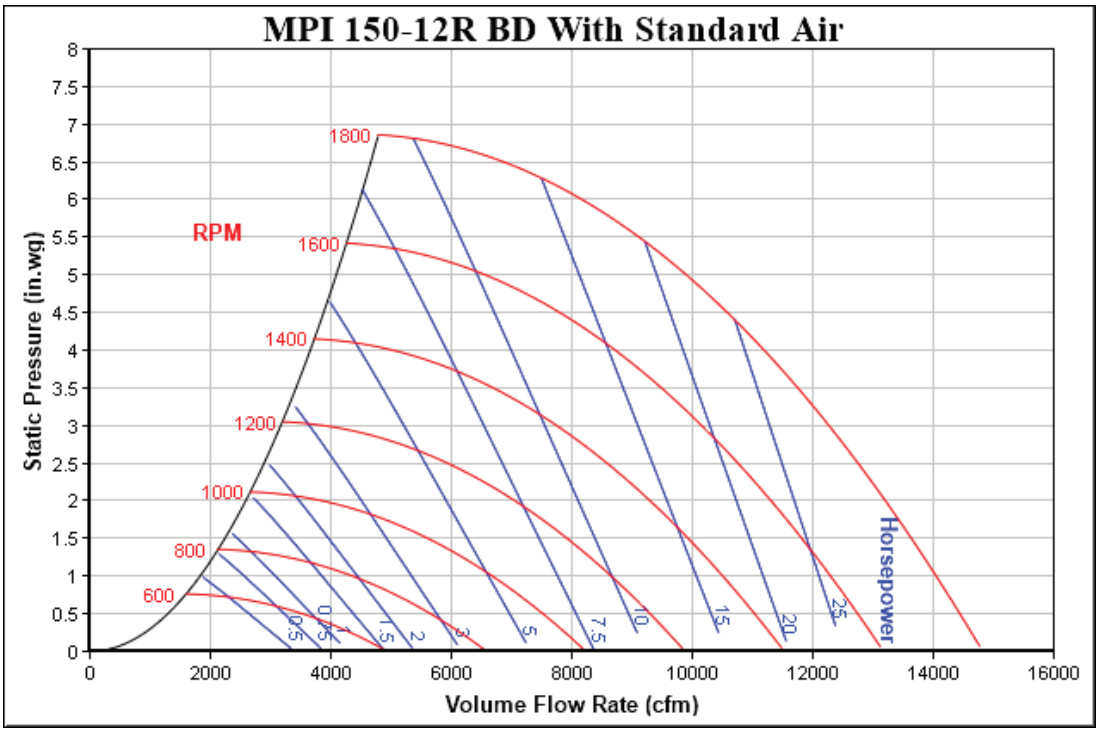

10 - 12.5 Ton blower Fan Curve

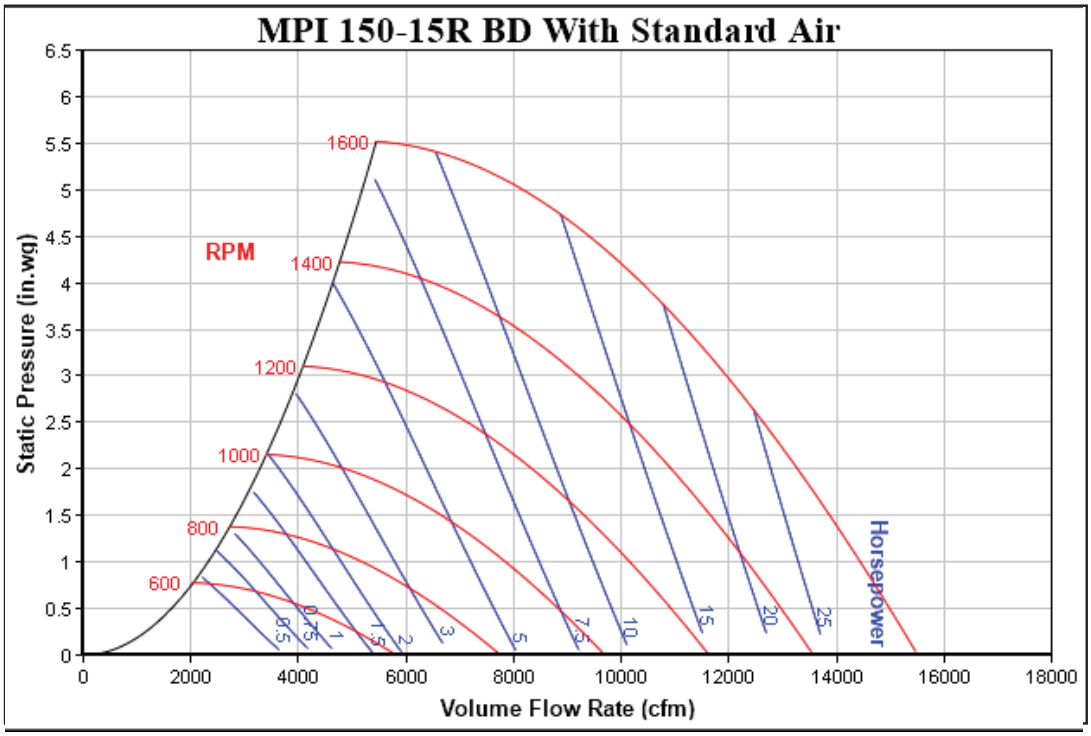

Static Pressure

7.5-12.5 TONS		
DOWNFLOW ECONOMIZER PRESSURE DROP		
Cabinet	CFM	SP in.wg.
7.5 Ton	2250	.04"
	3000	.07"
	3750	.11"
8.5 Ton	2550	.06"
	3400	.10"
	4250	.16"
10 Ton	3000	.08"
	4000	.13"
	5000	.22"
12.5 Ton	3750	.14"
	5000	.24"
	6250	.36"

7.5-12.5 TONS		
HORIZONTAL ECONOMIZER PRESSURE DROP		
Cabinet	CFM	SP in.wg.
7.5 Ton	2250	.05"
	3000	.07"
	3750	.13"
8.5 Ton	2550	.07"
	3400	.13"
	4250	.18"
10 Ton	3000	.07"
	4000	.12"
	5000	.19"
12.5 Ton	3750	.09"
	5000	.15"
	6250	.24"

Electrical Data

Model Number	Electrical Rating	Compressor			Outdoor Fan Motor			Indoor Fan Motor			Optional Electric Heat			Optional Powered Convienience Outlet	Optional Power Exhaust	Power Supply	
		QTY	RLA	LRA	QTY	HP	FLA	Type	HP	FLA	Part #	KW*	FLA	FLA	FLA	MCA	MOP
DFG0903D	208/230/3/60	2	13.1	83.1	2	0.33	2	Direct Drive Standard Static	2.4	8	-	-	-	-	-	41.6/41.6	50/50
											-	-	-	9.6/8.7	-	51.2/50.3	60/60
											-	-	-	-	3.3/3.0	44.9/44.6	50/50
											-	-	-	9.6/8.7	3.3/3.0	54.5/53.3	60/60
DFG0903L	208/230/3/60	2	13.1	83.1	2	0.33	2	Direct Drive Medium Static	2.4	8	-	-	-	-	-	41.6/41.6	50/50
											-	-	-	9.6/8.7	-	51.2/50.3	60/60
											-	-	-	-	3.3/3.0	44.9/44.6	50/50
											-	-	-	9.6/8.7	3.3/3.0	54.5/53.3	60/60
DFG0903W	208/230/3/60	2	13.1	83.1	2	0.33	2	Direct Drive High Static	3.5	10.9	-	-	-	-	-	44.5/44.5	50/50
											-	-	-	9.6/8.7	-	54.1/53.2	60/60
											-	-	-	-	3.3/3.0	47.8/47.5	60/60
											-	-	-	9.6/8.7	3.3/3.0	57.4/56.2	70/60
DFG0904D	460/3/60	2	6.1	41	2	0.33	0.85	Direct Drive Standard Static	2.4	5.4	-	-	-	-	-	20.8	25
											-	-	-	4.3	-	25.1	30
											-	-	-	-	1	21.8	25
											-	-	-	4.3	1	26.1	30
DFG0904L	460/3/60	2	6.1	41	2	0.33	0.85	Direct Drive Medium Static	2.4	5.4	-	-	-	-	-	20.8	25
											-	-	-	4.3	-	25.1	30
											-	-	-	-	1	21.8	25
											-	-	-	4.3	1	26.1	30
DFG0904W	460/3/60	2	6.1	41	2	0.33	0.85	Direct Drive High Static	3.5	7.2	-	-	-	-	-	22.6	30
											-	-	-	4.3	-	26.9	30
											-	-	-	-	1	23.6	30
											-	-	-	4.3	1	27.9	35
DFG0907D	575/3/60	2	4.4	33	2	0.33	0.67	Direct Drive Standard Static	2.4	4	-	-	-	-	-	15.1	20
											-	-	-	3.5	-	18.6	20
											-	-	-	-	1.7	16.3	20
											-	-	-	3.5	1.7	19.8	20
DFG0907L	575/3/60	2	4.4	33	2	0.33	0.67	Direct Drive Medium Static	2.4	4	-	-	-	-	-	15.1	20
											-	-	-	3.5	-	18.6	20
											-	-	-	-	1.7	16.3	20
											-	-	-	3.5	1.7	19.8	20
DFG0907W	575/3/60	2	4.4	33	2	0.33	0.67	Direct Drive High Static	3.5	5	-	-	-	-	-	16.1	20
											-	-	-	3.5	-	19.6	20
											-	-	-	-	1.7	17.3	20
											-	-	-	3.5	1.7	20.8	25
DFG1023D	208/230/3/60	2	14.5	98	2	0.33	2	Direct Drive Standard Static	2.4	8	-	-	-	-	-	44.6/44.6	50/50
											-	-	-	9.6/8.7	-	54.2/53.3	60/60
											-	-	-	-	3.3/3.0	47.9/47.6	60/60
											-	-	-	9.6/8.7	3.3/3.0	57.5/56.3	70/70
DFG1023L	208/230/3/60	2	14.5	98	2	0.33	2	Direct Drive Medium Static	3.5	10.9	-	-	-	-	-	47.5/47.5	60/60
											-	-	-	9.6/8.7	-	57.1/56.2	70/70
											-	-	-	-	3.3/3.0	50.8/50.5	60/60
											-	-	-	9.6/8.7	3.3/3.0	60.4/59.2	70/70
DFG1023W	208/230/3/60	2	14.5	98	2	0.33	2	Direct Drive High Static	3.5	10.9	-	-	-	-	-	47.5/47.5	60/60
											-	-	-	9.6/8.7	-	57.1/56.2	70/70
											-	-	-	-	3.3/3.0	50.8/50.5	60/60
											-	-	-	9.6/8.7	3.3/3.0	60.4/59.2	70/70

Electrical Data

Model Number	Electrical Rating	Compressor			Outdoor Fan Motor			Indoor Fan Motor			Optional Electric Heat			Optional Powered Convienience Outlet	Optional Power Exhaust	Power Supply	
		QTY	RLA	LRA	QTY	HP	FLA	Type	HP	FLA	Part #	KW*	FLA	FLA	FLA	MCA	MOP
DFG1024D	460/3/60	2	6.3	55	2	0.33	0.85	Direct Drive Standard Static	2.4	5.4	-	-	-	-	-	21.4	25
											-	-	-	4.3	-	25.7	30
											-	-	-	-	1	22.4	25
											-	-	-	4.3	1	26.7	30
DFG1024L	460/3/60	2	6.3	55	2	0.33	0.85	Direct Drive Medium Static	3.5	7.2	-	-	-	-	-	23.2	30
											-	-	-	4.3	-	27.5	30
											-	-	-	-	1	24.2	30
											-	-	-	4.3	1	28.5	35
DFG1024W	460/3/60	2	6.3	55	2	0.33	0.85	Direct Drive High Static	3.5	7.2	-	-	-	-	-	23.2	30
											-	-	-	4.3	-	27.5	30
											-	-	-	-	1	24.2	30
											-	-	-	4.3	1	28.5	35
DFG1027D	575/3/60	2	6	41	2	0.33	0.67	Direct Drive Standard Static	2.4	4	-	-	-	-	-	18.9	20
											-	-	-	3.5	-	22.4	25
											-	-	-	-	1.7	20.1	25
											-	-	-	3.5	1.7	23.6	25
DFG1027L	575/3/60	2	6	41	2	0.33	0.67	Direct Drive Medium Static	3.5	5	-	-	-	-	-	19.9	25
											-	-	-	3.5	-	23.4	25
											-	-	-	-	1.7	21.1	25
											-	-	-	3.5	1.7	24.6	30
DFG1027W	575/3/60	2	6	41	2	0.33	0.67	Direct Drive High Static	3.5	5	-	-	-	-	-	19.9	25
											-	-	-	3.5	-	23.4	25
											-	-	-	-	1.7	21.1	25
											-	-	-	3.5	1.7	24.6	30
DFG1203D	208/230/3/60	2	15.6	110	2	0.33	2	Direct Drive Standard Static	3.5	10.9	-	-	-	-	-	50.1/50.1	60/60
											-	-	-	9.6/8.7	-	59.7/58.8	70/70
											-	-	-	-	3.3/3.0	53.4/53.1	60/60
											-	-	-	9.6/8.7	3.3/3.0	63.0/61.8	70/70
DFG1203L	208/230/3/60	2	15.6	110	2	0.33	2	Direct Drive Medium Static	5	14.5	-	-	-	-	-	53.7/53.7	60/60
											-	-	-	9.6/8.7	-	63.3/62.4	70/70
											-	-	-	-	3.3/3.0	57.0/56.7	70/70
											-	-	-	9.6/8.7	3.3/3.0	66.6/65.4	80/80
DFG1203W	208/230/3/60	2	15.6	110	2	0.33	2	Direct Drive High Static	5	14.5	-	-	-	-	-	53.7/53.7	60/60
											-	-	-	9.6/8.7	-	63.3/62.4	70/70
											-	-	-	-	3.3/3.0	57.0/56.7	70/70
											-	-	-	9.6/8.7	3.3/3.0	66.6/65.4	80/80
DFG1204D	460/3/60	2	7.8	52	2	0.33	0.85	Direct Drive Standard Static	3.5	7.2	-	-	-	-	-	26.4	30
											-	-	-	4.3	-	30.7	35
											-	-	-	-	1	27.4	35
											-	-	-	4.3	1	31.7	35
DFG1204L	460/3/60	2	7.8	52	2	0.33	0.85	Direct Drive Medium Static	5	10.6	-	-	-	-	-	29.8	40
											-	-	-	4.3	-	34.1	45
											-	-	-	-	1	30.8	40
											-	-	-	4.3	1	35.1	45
DFG1204W	460/3/60	2	7.8	52	2	0.33	0.85	Direct Drive High Static	5	10.6	-	-	-	-	-	29.8	40
											-	-	-	4.3	-	34.1	45
											-	-	-	-	1	30.8	40
											-	-	-	4.3	1	35.1	45

Electrical Data

Model Number	Electrical Rating	Compressor			Outdoor Fan Motor			Indoor Fan Motor			Optional Electric Heat			Optional Powered Convienience Outlet	Optional Power Exhaust	Power Supply	
		QTY	RLA	LRA	QTY	HP	FLA	Type	HP	FLA	Part #	KW*	FLA	FLA	FLA	MCA	MOP
DFG1207D	575/3/60	2	5.8	38.9	2	0.33	0.67	Direct Drive Standard Static	3.5	5	-	-	-	-	-	19.5	25
											-	-	-	3.5	-	23.0	25
											-	-	-	-	1.7	20.7	25
											-	-	-	3.5	1.7	24.2	25
DFG1207L	575/3/60	2	5.8	38.9	2	0.33	0.67	Direct Drive Medium Static	5	7.2	-	-	-	-	-	21.7	25
											-	-	-	3.5	-	25.2	30
											-	-	-	-	1.7	22.9	30
											-	-	-	3.5	1.7	26.4	30
DFG1207W	575/3/60	2	5.8	38.9	2	0.33	0.67	Direct Drive High Static	5	7.2	-	-	-	-	-	21.7	25
											-	-	-	3.5	-	25.2	30
											-	-	-	-	1.7	22.9	30
											-	-	-	3.5	1.7	26.4	30
DFG1503D	208/230/3/60	2	19	123	2	0.5	2.7	Direct Drive Standard Static	3.5	10.9	-	-	-	-	-	59.1/59.1	70/70
											-	-	-	9.6/8.7	-	68.7/67.8	80/80
											-	-	-	-	3.3/3.0	62.4/62.1	80/80
											-	-	-	9.6/8.7	3.3/3.0	72.0/70.8	90/80
DFG1503L	208/230/3/60	2	19	123	2	0.5	2.7	Direct Drive Medium Static	5	14.5	-	-	-	-	-	62.7/62.7	80/80
											-	-	-	9.6/8.7	-	72.3/71.4	90/90
											-	-	-	-	3.3/3.0	66.0/65.7	80/80
											-	-	-	9.6/8.7	3.3/3.0	75.6/74.4	90/90
DFG1503W	208/230/3/60	2	19	123	2	0.5	2.7	Direct Drive High Static	5	14.5	-	-	-	-	-	62.7/62.7	80/80
											-	-	-	9.6/8.7	-	72.3/71.4	90/90
											-	-	-	-	3.3/3.0	66.0/65.7	80/80
											-	-	-	9.6/8.7	3.3/3.0	75.6/74.4	90/90
DFG1504D	460/3/60	2	9.7	62	2	0.5	1.4	Direct Drive Standard Static	3.5	7.2	-	-	-	-	-	31.9	40
											-	-	-	4.3	-	36.2	45
											-	-	-	-	1	32.9	40
											-	-	-	4.3	1	37.2	45
DFG1504W	460/3/60	2	9.7	62	2	0.5	1.4	Direct Drive High Static	5	10.6	-	-	-	-	-	35.3	45
											-	-	-	4.3	-	39.6	50
											-	-	-	-	1	36.3	45
											-	-	-	4.3	1	40.6	50
DFG1507D	575/3/60	2	7.4	50	2	0.5	1	Direct Drive Standard Static	3.5	5	-	-	-	-	-	23.7	30
											-	-	-	3.5	-	27.2	30
											-	-	-	-	1.7	24.9	30
											-	-	-	3.5	1.7	28.4	35
DFG1507L	575/3/60	2	7.4	50	2	0.5	1	Direct Drive Medium Static	5	7.2	-	-	-	-	-	25.9	30
											-	-	-	3.5	-	29.4	35
											-	-	-	-	1.7	27.1	30
											-	-	-	3.5	1.7	30.6	35
DFG1507W	575/3/60	2	7.4	50	2	0.5	1	Direct Drive High Static	5	7.2	-	-	-	-	-	25.9	30
											-	-	-	3.5	-	29.4	35
											-	-	-	-	1.7	27.1	30
											-	-	-	3.5	1.7	30.6	35

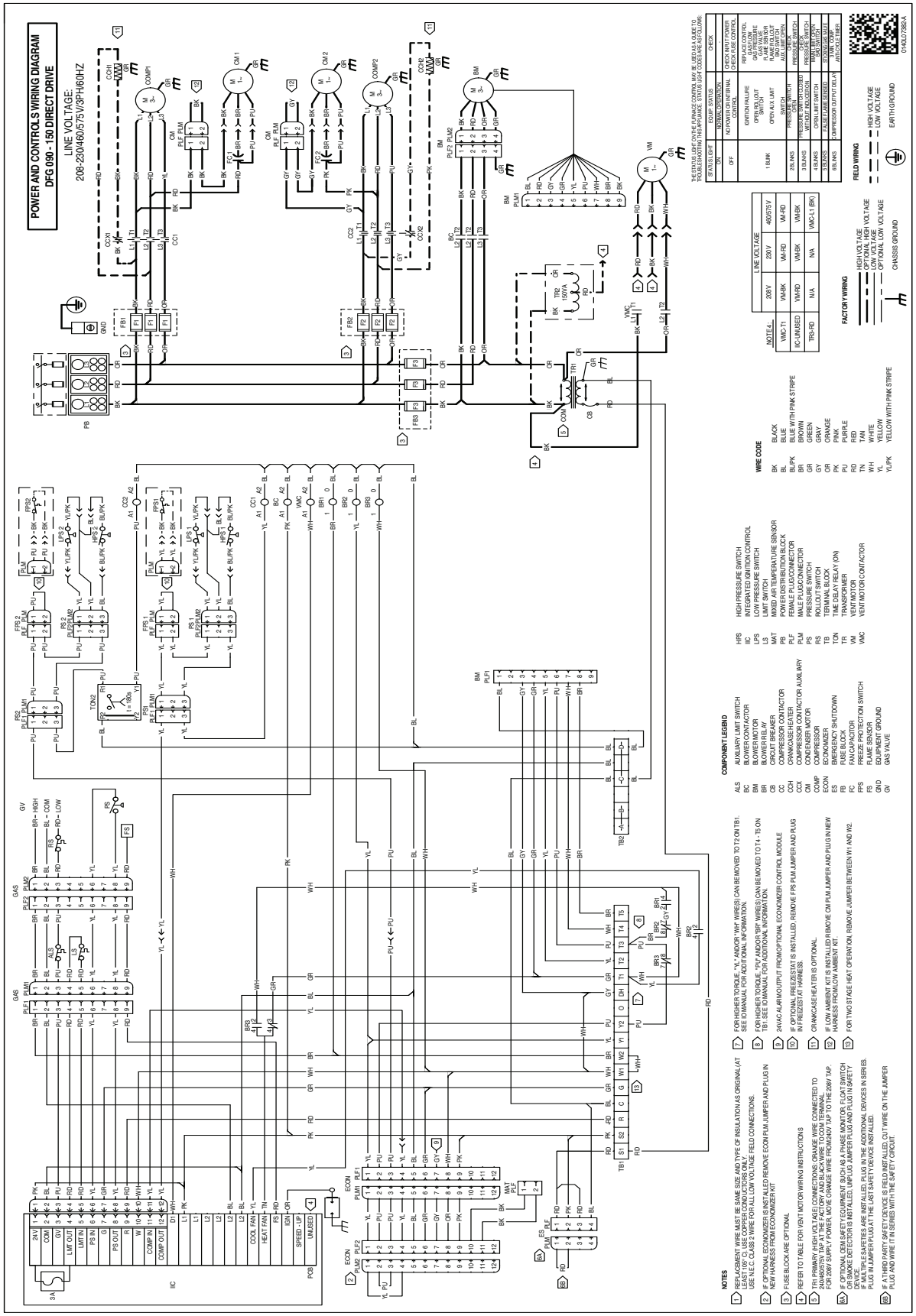
POWER AND CONTROLS WIRING DIAGRAM
DFG 090 - 150 DIRECT DRIVE
LINE VOLTAGE:
208-230/460/575V/3PH/60HZ
NOTES
COMPONENT LEGEND
WIRE CODE
FIELD WIRING
FACTORY WIRING
HIGH VOLTAGE
LOW VOLTAGE
EARTH GROUND
CHASSIS GROUND
OPTIONAL LOW VOLTAGE
IIC
PCB
ECON
GAS
GV
COMP1
COMP2
OM 1
OM 2
BM
VM
TB1
TB4
TB5
TB6
TB7
TB8
TB9
TB10
TB11
TB12
TB13
TB14
TB15
TB16
TB17
TB18
TB19
TB20
TB21
TB22
TB23
TB24
TB25
TB26
TB27
TB28
TB29
TB30
TB31
TB32
TB33
TB34
TB35
TB36
TB37
TB38
TB39
TB40
TB41
TB42
TB43

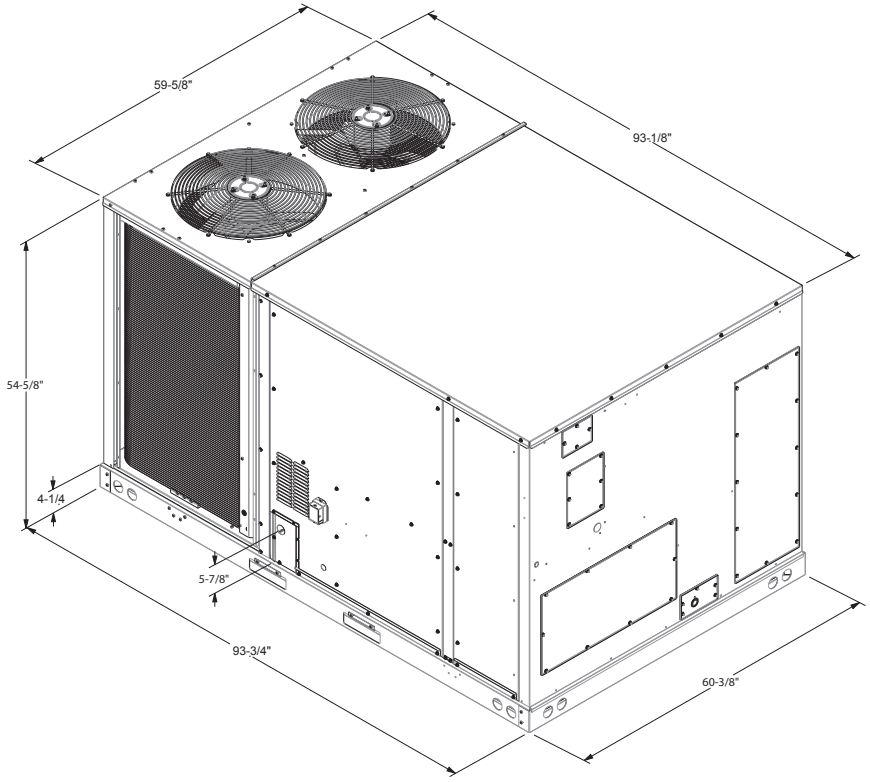

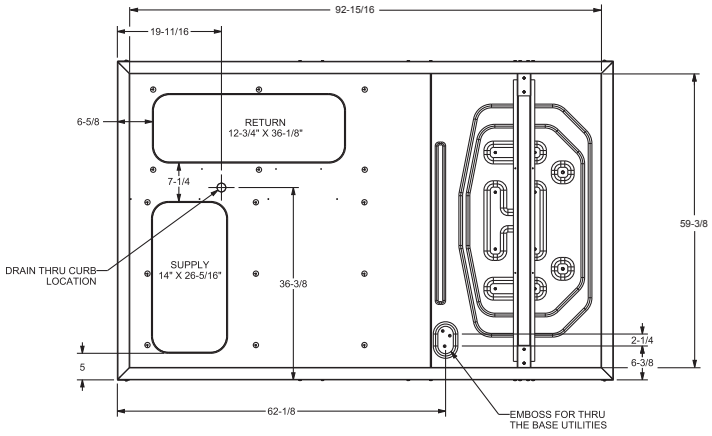

Model Size	DIM "A"
DFG 090	8.96
DFG 102	8.96
DFG 120	6.46
DFG 150	6.46

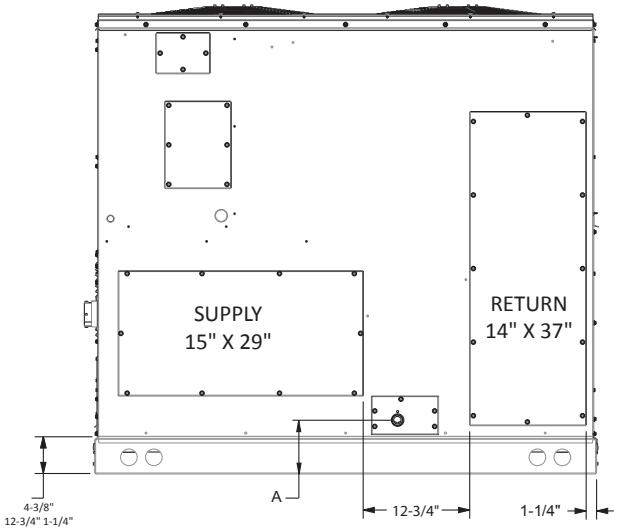

HORIZONTAL DISCHARGE

Electrical Connections

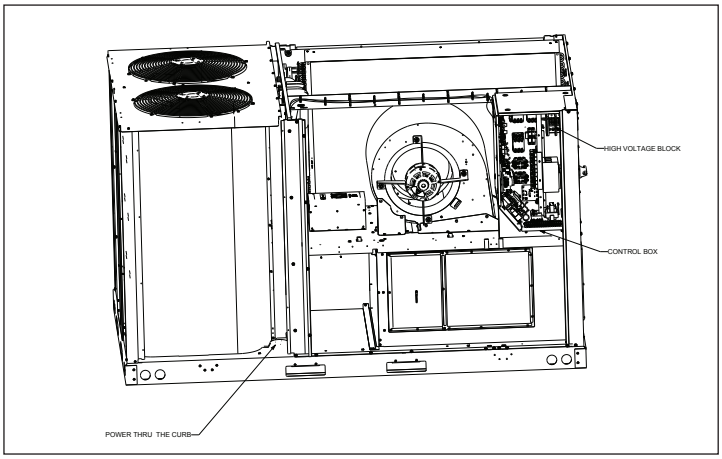

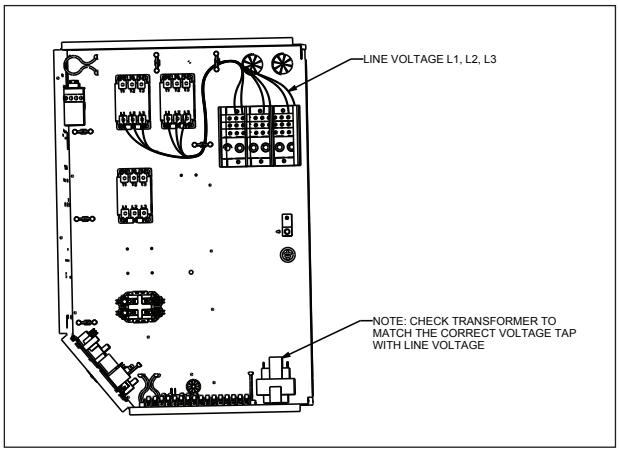

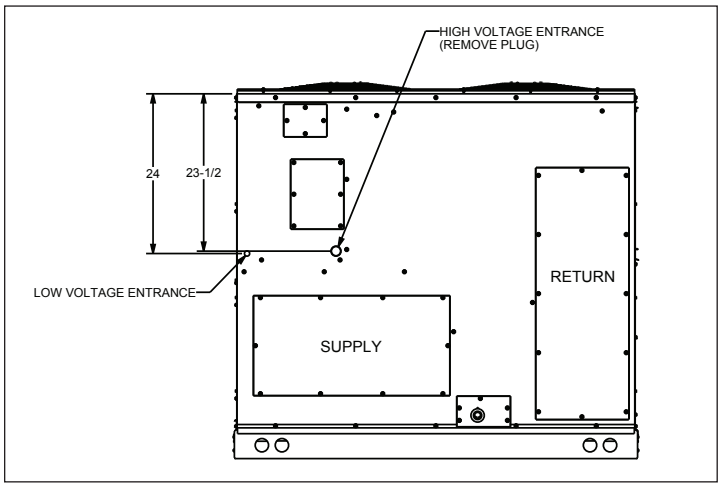

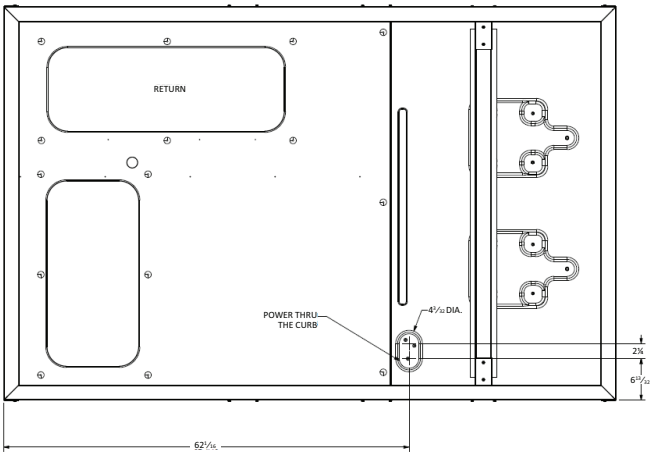

Unit Clearances

Service Clearance

Allow for recommended service clearances as shown in figure to the right. In situations that have multiple units, a 36" minimum clearance is required between the condenser coils. A clearance of 48" is recommended on all sides of the unit to allow service access and to ensure proper ventilation and condenser airflow. The top of the unit should be unobstructed. Provide a roof walkway along the sides of the unit for service and access to controls and components. Contact your Daikin sales representative for service requirements less than those recommended.

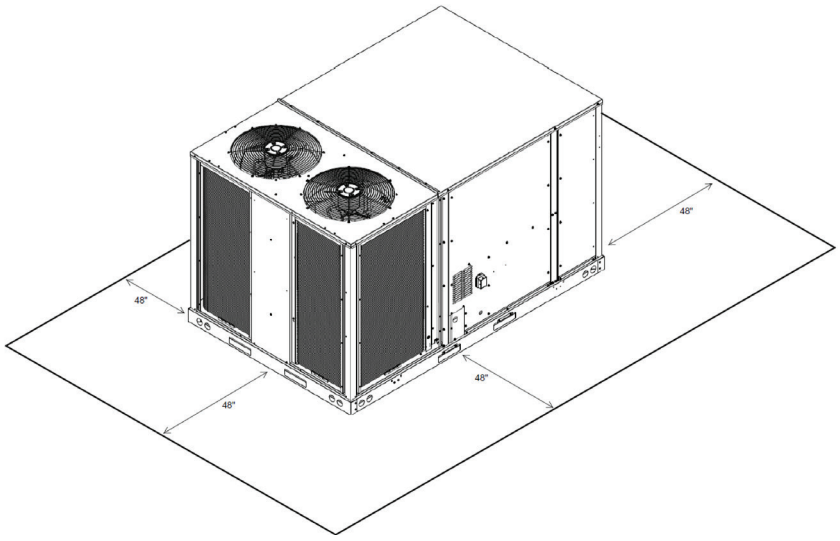

Unit Location

The structural engineer must verify that the roof has adequate support and ability to minimize deflection. Take extreme caution when using on a wooden roof structure. Unit condenser coils should be in a location that avoids any heated exhaust air.

Allow sufficient space around the unit for maintenance/service clearance. Consult your Daikin sales representative if available clearances do not meet minimum recommendations.

Where code considerations, such as the NEC, require extended clearances, these take precedence.

Provisions for forks have been included in the unit base frame. No other fork locations are approved.

» Unit must be lifted by the four lifting holes located at the base frame corners.

» Lifting cables should be attached to the unit with shackles.

» The distance between the crane hook and the top of the unit must not be less than 60".

» Two spreader bars must span over the unit to prevent damage to the cabinet by the lift cables. Spreader bars must be of sufficient length so that cables do not come in contact with the unit during transport. Remove wood struts mounted beneath unit base frame before setting unit on roof curb. These struts are intended to protect unit base frame from fork lift damage. To remove the struts, extract the sheet metal retainers and pull the struts through the base of the unit. Refer to rigging label on the unit.

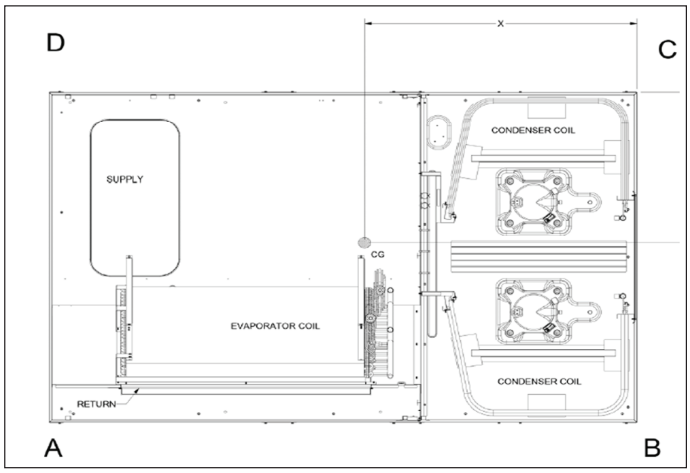

Corner & Center-of-Gravity Locations

Important: If using bottom discharge with roof curb, ductwork should be attached to the curb prior to installing the unit. Refer to the Roof Curb Installation Instructions for proper curb installation. Curbing must be installed in compliance with the National Roofing Contractors Association Manual. Lower unit carefully onto roof mounting curb. While rigging the unit, the center of gravity will cause the condenser end to be lower than the supply air end. Bring condenser end of unit into alignment with the curb. With condenser end of the unit resting on curb member and using curb as a fulcrum, lower opposite end of the unit until entire unit is seated on the curb. When a rectangular cantilever curb is used, take care to center the unit. Check for proper alignment and orientation of supply and return openings with duct.

Roof Curb Installation

The roof curb is field-assembled and must be installed level (within 1/16" per foot side to side). A sub-base must be constructed by the contractor in applications involving pitched roofs. Gaskets are furnished and must be installed between the unit and curb. For proper installation, follow NRCA guidelines. In applications requiring post and rail installation, an I-beam securely mounted on multiple posts should support the unit on each side. In addition, the insulation on the underside of the unit should be protected from the elements. Applications in geographic areas subjected to seismic or hurricane conditions must meet code requirements for fastening the unit to the curb and the curb to the building structure. For further and more detailed information please refer to our Daikin Light Commercial Packaged unit IOD.

Weights

Model	Shipping Weight (lbs)	Operating Weight (lbs)	Corner Weights (lbs)				Length	Width
			A	B	C	D	X (in)	Y (in)
DFG090	1140	1060	228	310	236	366	49	29
DFG102	1160	1080	230	318	244	368	49	29
DFG120	1219	1139	304	238	381	296	46	27
DFG150	1310	1230	206	437	241	426	46	30

For details on accessories refer to document **PM-LC-ACCESSORIES**

Notes

Notes

Notes

Our continuing commitment to quality products may mean a change in specifications without notice.
©2024 **DAIKIN COMFORT TECHNOLOGIES MANUFACTURING, L.P.** • Houston, Texas • Printed in the USA.