DRC Commercial

High-Efficiency Air Conditioner
Direct-Drive Packaged Rooftop Unit
DRC Commercial
3-6 Nominal Tons

3-5 TON - 16.4 SEER2 / 12.1 EER2
6 TON - 17.1 IEER / 12.1 EER

5 YEAR PARTS LIMITED WARRANTY*

Intertek

*Complete warranty details available from your local distributor or manufacturer's representative or at www.daikincomfort.com or www.daikinac.com

Supersedes 05/23

Our Perfect Package:

Harnessing energy-efficient performance, proven technology, and enhanced comfort for life.

Since becoming the first company in Japan to manufacture packaged air conditioning systems, in 1951, Daikin has supported comfortable indoor living based on the strengths and technologies that have led to the growth of the company becoming one of the world's largest manufacturers of HVAC products, systems and refrigerants.

Today, as a comprehensive global manufacturer of HVAC products and systems, the Daikin brand is committed to being recognized as a truly global and excellent company capable of continually creating new value for its customers. The company plans to pursue sustainable growth and foster business operations that consistently harmonize with the goals of improving indoor comfort.

The group philosophy of the company includes:

- Creating new value continuously for customers
- Developing world leading energy-saving technology
- Being a flexible and dynamic organization
- Allowing employees to be the driving force for the success of the company
- Fostering an atmosphere of best practices, boldness, and innovation
- Thinking and acting globally

Contents

2	**Introduction**	2
4	**Nomenclature**	4
5	**Features and Benefits**	5
	Applications	8
	Serviceability	8
9	**Product Specifications**	9
	Coil Dimensions	12
	AHRI Ratings	12
	Sound Data	12
13	**Expanding Cooling Data**	13
21	**Electric Heater Data**	21
22	**Airflow**	22
34	**DDC Airflow**	34
41	**Static Pressure**	41
42	**HGRH Performance**	42
45	**Electrical Data**	45
54	**Wiring Diagrams**	54
58	**Dimensional Data**	58
59	**Electrical Connections**	59
	Unit Clearances	59
60	**Installation**	60
	Weights	60

For details on accessories refer to document **PM-LC-ACCESSORIES**

Nomenclature

D	R	C	036	3	D	XXX	C	X	A	X	X	X	X	X	X	X	X	B	*
1	2	3	4,5,6	7	8	9,10,11	12	13	14	15	16	17	18	19	20	21	22	23	24

Revision Levels
Major & Minor

Brand
D Daikin

Configuration
R High Efficiency

Application
C Cooling

Nominal Cooling Capacity
036 3 Tons
048 4 Tons
060 5 Tons
072 6 Tons

Voltage
1 208-230/1/60 4 460/3/60
3 208-230/3/60 7 575/3/60

Supply Fan/Drive Type/Motor
D Direct-Drive- Standard Static
W Direct-Drive- High-Static

Nominal Heating Capacity
AC Field and Factory-Installed Electric Heat
XXX No Heat
005 5kW
010 10 kW
015 15 kW
016 15 kW
020 20 kW
021 20 kW
022 20 kW
030 30 kW
031 30 kW

See product specifications for heat size(s) available for each capacity.

Refrigeration Systems
C Two stage cooling modes
F Two stage cooling modes with Hot Gas Reheat and Low-ambient control

Heat Exchanger
X No options
B No options

Controls
A Electromechanical controls
C DDC w/ BACnet™ interface

Sensors
X No Options
A RA Smoke Detector
B SA Smoke Detector
C RA & SA Smoke Detector

Coils, Hail guard
X No Options
C Hail Guard

Economizer
X No Options
A Ultra Low-Leak Downflow Economizer w/ Enthalpy Sensor
B Low-Leak Downflow Economizer w/ Enthalpy Sensor
E Ultra Low-Leak Downflow Economizer for DDC controls w/ Enthalpy Sensor
G Ultra Low-Leak Downflow Economizer w/ Dry Bulb Sensor
H Low-Leak Downflow Economizer w/ Dry Bulb Sensor
L Ultra Low-Leak Downflow Economizer for DDC controls w/ Dry Bulb Sensor
N Low-Leak Downflow Economizer for DDC controls w/ Enthalpy Sensor
P Low-Leak Downflow Economizer for DDC controls w/ Dry Bulb Sensor

Electrical
X No Options
A Non-Fused Disconnect
B Phase Monitor
C Thru-the-base connections
E Non-Fused Disconnect and Phase Monitor
F Non-Fused Disconnect and Thru-the-base connections
H Phase Monitor and Thru-the-base connections
L Non-Fused Disconnect, Thru-the-base connections and Phase Monitor

Service Options
X No Option
A Powered convenience outlet
B Non-powered convenience outlet
C Hinge Panels
D Hinged Panels and Powered convenience outlet
E Hinged Panels and non-powered convenience outlet
M Metal frame filter and Hinged Panels (National Account Customers Only)

X No Options

PE Connection
X No Options
B Single-point power connection for Power Exhaust

X No Options

AC Stocking Models

New Daikin 3-6 Ton Direct-Drive

Model Number	Code String
DRC0361D000001S	DRC0361DXXXCXAXXXXXXXX
DRC0363D000001S	DRC0363DXXXCXAXXXXXXXX
DRC0364D000001S	DRC0364DXXXCXAXXXXXXXX
DRC0367D000001S	DRC0367DXXXCXAXXXXXXXX
DRC0481D000001S	DRC0481DXXXCXAXXXXXXXX
DRC0483D000001S	DRC0483DXXXCXAXXXXXXXX
DRC0484D000001S	DRC0484DXXXCXAXXXXXXXX
DRC0487D000001S	DRC0487DXXXCXAXXXXXXXX
DRC0601D000001S	DRC0601DXXXCXAXXXXXXXX
DRC0603D000001S	DRC0603DXXXCXAXXXXXXXX
DRC0604D000001S	DRC0604DXXXCXAXXXXXXXX
DRC0607D000001S	DRC0607DXXXCXAXXXXXXXX
DRC0723D000001S	DRC0723DXXXCXAXXXXXXXX
DRC0724D000001S	DRC0724DXXXCXAXXXXXXXX
DRC0727D000001S	DRC0727DXXXCXAXXXXXXXX

Daikin Packaged Rooftop Units (RTUs) are built to perform, with features and options that help provide low installation and operation costs, superior indoor air quality, efficient operation, and longevity.

Installation

Daikin Packaged units are designed with fast and easy installation in mind and are ideal for both new construction and retrofit projects. Our packaged rooftop units are built to be a direct replacement for most rooftop units on the field without the need of a curb adapter, to be able to replace the unit in a shorter time and at a lower cost (compared to the previous design).

Cabinet Construction

Daikin packaged rooftop units are made with high quality galvanized steel with a powder-paint finish to provide higher corrosion resistance.

» Easy accessibility using our tool-less filter access.

» The interior surface in the indoor air section is fully insulated to prevent sweating and thermal losses, using our foil face fiberglass insulation which also omits exposed filter fibers into the airstream.

» 1" Raised flanged edges around the supply and return offer easy installation for the duct connections.

» The full perimeter base rail is built using heavy gauge galvanized steel for a stronger structural installation, the base rails are a minimum of 3 ½" tall and include holes to allow for overhead rigging and lifting with forklifts.

» Electrical lines and can be brought through the base of the unit or through the horizontal knockout for easy installation and accessibility on the field.

Compressor

High performance, low noise scroll compressors to match the required total load.

» Two-stage scroll compressor for partial load applications.

» Resiliently factory-mounted on rubber grommets for vibration isolation

» Unit is factory charged with environmentally friendly R-410A refrigerant.

» Compressor location outside the condenser section to avoid air bypass.

» Internal overload protection included with compressor.

Supply Fan

The direct-drive with airfoil single width, single inlet (SWSI) Class II construction supply fan with aluminum fan +blades provides efficient and quiet operation at wide ranging static pressure and air flow requirements.

» Fan wheel is continuously welded to the hub plate and end rim for long lasting reliable operation.

» Direct-drive ECM motor removes the need for belts, sheaves, or bearings and its permanently lubricated motors provides low maintenance cost.

» Each fan assembly is dynamically trim balanced at the factory before shipment for quick start-up and efficient operation.

» Electromechanical integrated controls modulate the supply fan motor

» Motor with thermal overload is provided for motor long lasting operation.

Coils

All units use large face area outdoor coils. These coils are constructed with seamless copper tubes, mechanically bonded into aluminum plate-type fins with full drawn collars to completely cover the tubes for high operating efficiencies.

The indoor coil section is installed in a draw through configuration to provide better dehumidification.

» Coils are factory pressure tested to ensure pressure and leak integrity.

» Copper tube / aluminum fin coils on condenser and evaporator

» 5mm Smart Coil Technology on all condenser coils for improved performance and reduced refrigerant load.

Controls and Wiring

Packaged rooftop units come equipped with a well-organized, large, easy to use weatherproof internal control box with easy access, for a better user experience.

» Units are factory-wired with labeled color-coded wires and complete 24-volt Electromechanical controls package.

» Units include single-point power entry as standard and also available with electric heat kits if selected.

» Terminal blocks are provided as standard for easy installation and field power wiring

» The Daikin iLINQ Controller is a factory-installed solution to provide intelligent control for Daikin Light Commercial rooftop units* (RTUs). iLINQ provides physical inputs and outputs to control and monitor the RTU and features a graphic web interface for remote access (via a computer or tablet). Equipped with built-in BACnet™ IP and MS/TP interface or it can be used with an optional LonWorks® card that is available to integrate the Daikin RTU with building automation systems (BMS).

Filtration

Unit provides a draw-through filter section as standard for better air quality and long lasting component maintenance.

» Filters installed on the units are standard off the shelf sizes for easy replacement.

» One or two size filter per unit for low maintenance cost and easy replacement.

» Easy and fast filter service access.

Heating Section

Wide ranging of electric heat selections effectively handle most comfort heating demand from morning warm-up control to full heat.

Electric Heat

ETL approved electric heat is factory assembled, installed and tested.

» Heating control is fully integrated into the unit's control system for quick start-up and reliable control.

» Durable low watt density, nickel chromium elements provide longer life (compared to units without).

» Fuses are provided in each branch circuit to a maximum of 48 Amps per NEC requirements.

» Single-point power connection reduces installation cost.

» For operational safeties electric heat includes automatic reset, and high temperature limit safety protection and an airflow safety switch to prevent electric heat operation in the event of no airflow.

Electrical

Units are completely wired and tested at the factory to provide faster commissioning and start-up.

» Wiring complies with NEC requirements and all applicable UL standards.

» For ease of use, wiring and electrical components are number coded and labeled according to the electrical diagram.

» A 120 V GFI convenience receptacle requiring independent power supply for the receptacle is optional.

» An optional unit powered 20 amp 115 V convenience receptacle, complete with factory mounted transformer, disconnect switch, and primary and secondary overload protection, eliminates the need to pull a separate 115 V power source.

» Supply air fan, compressor, and condenser fan motor branch circuits have individual short circuit protection. Unit includes knockouts in the bottom of the main control panels for field wiring entrance.

» A single-point power connection with power block is standard and a terminal board is provided for connecting low voltage control wiring.

» For better serviceability an optional non-fused disconnect switch can be installed inside the control panel and operated by an externally mounted handle to disconnect the electrical power at the unit

Daikin Modulating Hot Gas Reheat Dehumidification

Using a space sensor in conjunction with the Daikin iLINQ Controller and Reheat Module, the unit can initiate a Dehumidification Mode as the space humidity rises above setpoint. In this mode, the modulating valve diverts a percentage of the hot gas to the reheat coil as required in order to maintain supply air temperature requirements while lowering the space relative humidity. The modulating valve system allows smooth transition into dehumidification and longer run time at a steady supply air temperature. The indoor fan will operate at high and low speed during dehumidification mode.

DAIKIN

Applications

Daikin Rooftop units are intended for comfort cooling applications in normal heating, ventilating, and air conditioning. Consult your local Daikin sales representative for applications involving operations at high ambient temperatures, high altitudes, non-cataloged voltages, or for job-specific unit selections that fall outside of the range of the catalog tables.

For proper operation, units should be rigged in accordance with instructions stated on the installation manual. Fire dampers, if required, must be installed in the ductwork according to local and/or state codes. No space is allowed for these dampers in the unit.

Follow factory check, test and start procedures explicitly to achieve satisfactory start-up and operation.

Most rooftop applications take advantage of the significant energy savings provided with economizer operation. When an economizer system is used, mechanical refrigeration is typically not required below an ambient temperature of 50°F.

Serviceability

Daikin packaged rooftop units are built with serviceability in mind, designed to make future maintenance and service on the unit easy and accessible.

- Our packaged rooftop units offer a slide out blower to facilitate the access and removal of the fan.
- Filter panels on the small chassis line offer tool-less access for easy maintenance.
- Independent compressor outside of the air bypass to eliminate component blockage and provide easy access.
- Labeled field connections, color coded and continuously marked wire to identify point-to-point component connections.
- All 3 - 12.5 ton units are designed for convertible airflow orientation to serve downflow or horizontal applications. Every unit ships prepared to convert to horizontal orientation in the field if required.
- Condenser clean out from inside-out.
- Easy access to gas valves and control panel.

Model	DRC0361D000001S	DRC0363D000001S	DRC0364D000001S	DRC0367D000001S
COOLING CAPACITY				
Total, BTU/h	36,000	36,000	36,000	36,000
SEER2 / EER2	16.4/12.1	16.4/12.1	16.4/12.1	16.4/12.1
AHRI Reference #	210798529	212914145	212914146	212914147
EVAPORATOR MOTOR / COIL				
Motor Type	Direct-Drive	Direct-Drive	Direct-Drive	Direct-Drive
External Static Pressure (ESP)	Standard	Standard	Standard	Standard
Wheel Dia. X Width	12x11	12x11	12x11	12x11
Indoor Nominal CFM	1180	1180	1180	1180
RPM	1200	1200	1500	1500
Indoor Horsepower	0.75	0.75	1.20	1.20
Filter Size (in)	14 X 20 X 2 (4)	14 X 20 X 2 (4)	14 X 20 X 2 (4)	14 X 20 X 2 (4)
Drain Size (NPT)	¾	¾	¾	¾
R-410A Refrigerant Charge (oz.)	106	106	106	106
Evaporator Coil Face Area (ft^2)	7.3	7.3	7.3	7.3
Rows Deep/ Fins per Inch	$^4/_{16}$	$^4/_{16}$	$^4/_{16}$	$^4/_{16}$
CONDENSER FAN/COIL				
Quantity of Condenser Fan Motors	1	1	1	1
RPM (High/Low stage)	810	810	810	810
Outdoor Horsepower	0.17	0.17	0.17	0.17
Fan Diameter/ # Fan Blades	22 / 3	22 / 3	22 / 3	22 / 3
Face Area (ft^2)	12.5	12.5	12.5	12.5
Rows Deep / Fins per Inch	2 / 28	2 / 28	2 / 28	2 / 28
COMPRESSOR				
Quantity / Type / Stages	1 / Scroll / 2	1 / Scroll / 2	1 / Scroll / 2	1 / Scroll / 2
Compressor RLA / LRA	15.6/83	11.6/73	5.7/38	4/25.6
ELECTRICAL DATA				
Voltage-Phase-Frequency	208/230-1-60	208/230-3-60	460-3-60	575-3-60
Indoor Blower FLA	5.7	5.7	2.5	2
Max External Static (In. W.C.)	0.8	0.8	0.8	0.8
Outdoor Fan FLA	0.95	0.95	0.48	0.39
Min. Circuit Ampacity[1]	26.2/26.2	20.5/20.5	10.1	7.4
Max. Overcurrent Protection (A)[2]	40/40	30/30	15	15
Power Supply Conduit Hole Dia. (in)	1.125	1.125	1.125	1.125
Low-Voltage Conduit Hole Dia. (in)	0.5	0.5	0.5	0.5
OPERATING WEIGHT (LBS.)				
Operating Weight (lbs)	537	537	537	537
SHIPPING WEIGHT (LBS.)				
Ship Weight (lbs)	595	595	595	595

[1] Wire size should be determined in accordance with National Electrical Codes. Extensive wire runs will require larger wire sizes.
[2] May use fuses or HACR-type circuit breakers of the same size as noted.
Note: Always check the S&R plate for electrical data on the unit being installed.

Model	DRC0481D000001S	DRC0483D000001S	DRC0484D000001S	DBC0487D000001S
COOLING CAPACITY				
Total, BTU/h	47,000	47,000	47,000	47,000
SEER2 / EER2	16.4/12	16.4/12	16.4/12	16.4/12
AHRI Reference #	210798530	212914148	212914149	212914150
EVAPORATOR MOTOR / COIL				
Motor Type	Direct-Drive	Direct-Drive	Direct-Drive	Direct-Drive
External Static Pressure (ESP)	Standard	Standard	Standard	Standard
Wheel Dia. X Width	12x11	12x11	12x11	12x11
Indoor Nominal CFM	1500	1500	1500	1500
RPM	1200	1200	1500	1500
Indoor Horsepower	1.00	1.00	1.20	1.20
Filter Size (in)	14 X 20 X 2 (4)	14 X 20 X 2 (4)	14 X 20 X 2 (4)	14 X 20 X 2 (4)
Drain Size (NPT)	¾	¾	¾	¾
R-410A Refrigerant Charge (oz.)	135	135	135	135
Evaporator Coil Face Area (ft^2)	7.3	7.3	7.3	7.3
Rows Deep/ Fins per Inch	4/16	4/16	4/16	4/16
CONDENSER FAN/COIL				
Quantity of Condenser Fan Motors	1	1	1	1
RPM (High/Low stage)	810	810	810	810
Outdoor Horsepower	0.17	0.17	0.17	0.17
Fan Diameter/ # Fan Blades	22 / 3	22 / 3	22 / 3	22 / 3
Face Area (ft^2)	19.0	19.0	19.0	19.0
Rows Deep / Fins per Inch	2 / 28	2 / 28	2 / 28	2 / 28
COMPRESSOR				
Quantity / Type / Stages	1 / Scroll / 2	1 / Scroll / 2	1 / Scroll / 2	1 / Scroll / 2
Compressor RLA / LRA	21.2/104	14/83.1	6.4/41	4.6/33
ELECTRICAL DATA				
Voltage-Phase-Frequency	208/230-1-60	208/230-3-60	460-3-60	575-3-60
Indoor Blower FLA	6.9	6.9	2.5	2
Max External Static (In. W.C.)	0.8	0.8	0.8	0.8
Outdoor Fan FLA	0.95	0.95	0.48	0.39
Min. Circuit Ampacity[1]	34.3/34.3	25.4/25.4	11	8.08
Max. Overcurrent Protection (A)[2]	50/50	35/35	15	15
Power Supply Conduit Hole Dia. (in)	1.125	1.125	1.125	1.125
Low-Voltage Conduit Hole Dia. (in)	0.5	0.5	0.5	0.5
OPERATING WEIGHT (LBS.)				
Operating Weight (lbs)	590	590	590	590
SHIPPING WEIGHT (LBS.)				
Ship Weight (lbs)	648	648	648	648

[1] Wire size should be determined in accordance with National Electrical Codes. Extensive wire runs will require larger wire sizes.
[2] May use fuses or HACR-type circuit breakers of the same size as noted.
Note: Always check the S&R plate for electrical data on the unit being installed.

Model	DRC0601D000001S	DRC0603D000001S	DRC0604D000001S	DRC0607D000001S
COOLING CAPACITY				
Total, BTU/h	58,000	58,000	58,000	58,000
SEER2 / EER2	16.2/11.9	16.2/11.9	16.2/11.9	16.2/11.9
AHRI Reference #	210798531	212914151	212914152	212914153
EVAPORATOR MOTOR / COIL				
Motor Type	Direct-Drive	Direct-Drive	Direct-Drive	Direct-Drive
External Static Pressure (ESP)	Standard	Standard	Standard	Standard
Wheel Dia. X Width	12x11	12x11	12x11	12x11
Indoor Nominal CFM	1850	1850	1850	1850
RPM	1200	1200	1500	1500
Indoor Horsepower	1.00	1.00	1.20	1.20
Filter Size (in)	14 X 20 X 2 (2) 20 X 20 X 2 (2)	14 X 20 X 2 (2) 20 X 20 X 2 (2)	14 X 20 X 2 (2) 20 X 20 X 2 (2)	14 X 20 X 2 (2) 20 X 20 X 2 (2)
Drain Size (NPT)	¾	¾	¾	¾
R-410A Refrigerant Charge (oz.)	150	150	150	150
Evaporator Coil Face Area (ft^2)	9.2	9.2	9.2	9.2
Rows Deep/ Fins per Inch	4/16	4/16	4/16	4/16
CONDENSER FAN/COIL				
Quantity of Condenser Fan Motors	1	1	1	1
RPM (High/Low stage)	750 / 1000	750 / 1000	750 / 1000	750 / 1000
Outdoor Horsepower	0.33	0.33	0.33	0.33
Fan Diameter/ # Fan Blades	22 / 3	22 / 3	22 / 3	22 / 3
Face Area (ft^2)	19.0	19.0	19.0	19.0
Rows Deep / Fins per Inch	2 / 28	2 / 28	2 / 28	2 / 28
COMPRESSOR				
Quantity / Type / Stages	1 / Scroll / 2	1 / Scroll / 2	1 / Scroll / 2	1 / Scroll / 2
Compressor RLA / LRA	26.9/139.9	16.2/110	7.6/52	5.3/38.9
ELECTRICAL DATA				
Voltage-Phase-Frequency	208/230-1-60	208/230-3-60	460-3-60	575-3-60
Indoor Blower FLA	6.9	6.9	2.5	2
Max External Static (In. W.C.)	0.8	0.8	0.8	0.8
Outdoor Fan FLA	2.6	2.6	1.6	1.144
Min. Circuit Ampacity[1]	43.2/43.2	29.8/29.8	13.6	11.3
Max. Overcurrent Protection (A)[2]	70/70	45/45	20	15
Power Supply Conduit Hole Dia. (in)	1.125	1.125	1.125	1.125
Low-Voltage Conduit Hole Dia. (in)	0.5	0.5	0.5	0.5
OPERATING WEIGHT (LBS.)				
Operating Weight (lbs)	606	606	606	606
SHIPPING WEIGHT (LBS.)				
Ship Weight (lbs)	664	664	664	664

[1] Wire size should be determined in accordance with National Electrical Codes. Extensive wire runs will require larger wire sizes.
[2] May use fuses or HACR-type circuit breakers of the same size as noted.
Note: Always check the S&R plate for electrical data on the unit being installed.

Model	DRC0723D000001S	DRC0724D000001S	DRC0727D000001S
COOLING CAPACITY			
Total, BTU/h	72,000	72,000	72,000
IEER / EER	17.1/12.1	17.1/12.1	17.1/12.1
AHRI Reference #	206214135	206214136	206214137
EVAPORATOR MOTOR / COIL			
Motor Type	Direct-Drive	Direct-Drive	Direct-Drive
External Static Pressure (ESP)	Standard	Standard	Standard
Wheel Dia. X Width	12x11	12x11	12x11
Indoor Nominal CFM	2200	2200	2200
RPM	1500	1500	1500
Indoor Horsepower	1.20	1.20	1.20
Filter Size (in)	20 X 20 X 2 (4)	20 X 20 X 2 (4)	20 X 20 X 2 (4)
Drain Size (NPT)	¾	¾	¾
R-410A Refrigerant Charge (oz.)	170	170	170
Evaporator Coil Face Area (ft²)	10.1	10.1	10.1
Rows Deep/ Fins per Inch	4/16	4/16	4/16
CONDENSER FAN/COIL			
Quantity of Condenser Fan Motors	1	1	1
RPM (High/Low stage)	1122	1122	1122
Outdoor Horsepower	0.33	0.33	0.33
Fan Diameter/ # Fan Blades	22 / 4	22 / 4	22 / 4
Face Area (ft²)	24.1	24.1	24.1
Rows Deep / Fins per Inch	2 / 28	2 / 28	2 / 28
COMPRESSOR			
Quantity / Type / Stages	1 / Scroll / 2	1 / Scroll / 2	1 / Scroll / 2
Compressor RLA / LRA	17.6/136	8.5/66.1	6.3/55.3
ELECTRICAL DATA			
Voltage-Phase-Frequency	208/230-3-60	460-3-60	575-3-60
Indoor Blower FLA	5	2.5	2
Max External Static (In. W.C.)	0.8	0.8	0.8
Outdoor Fan FLA	2	0.85	0.67
Min. Circuit Ampacity[1]	29.0/29.0	13.9	10.6
Max. Overcurrent Protection (A)[2]	45/45	20	15
Power Supply Conduit Hole Dia. (in)	1.125	1.125	1.125
Low-Voltage Conduit Hole Dia. (in)	0.5	0.5	0.5
OPERATING WEIGHT (LBS.)			
Operating Weight (lbs)	657	657	657
SHIPPING WEIGHT (LBS.)			
Ship Weight (lbs)	715	715	715

[1] Wire size should be determined in accordance with National Electrical Codes. Extensive wire runs will require larger wire sizes.
[2] May use fuses or HACR-type circuit breakers of the same size as noted.
Note: Always check the S&R plate for electrical data on the unit being installed.

Coil Dimensions

Model	Tons	Fin height in.	Fin length in.
DRC	3	27.71	38.07
	4	27.71	38.07
	5	34.64	38.07
	6	38.10	38.07

AHRI Ratings

1PH/3PH Models			
MODEL	**CAPACITY**	**EER2**	**SEER2**
DRC036*D	36,000	12.1	16.4
DRC048*D	47,000	12.0	16.4
DRC060*D	58,000	11.9	16.2
MODEL	**CAPACITY**	**EER**	**IEER**
DRC072*D	72,000	12.1	17.1

Sound Data

Model	Outdoor sound (dB) at 60 Hz								
	A-Weighted	63	125	250	500	1000	2000	4000	8000
036*D	75	78.5	85.4	74.4	71.8	69.1	65.8	60.9	59.2
048*D	73	82.5	78.1	71.6	69.5	68.0	66.1	59.5	58.6
060*D	76	84.4	80.5	76.2	72.9	70.9	67.4	63.8	63.1
072*D	81	82.7	80.6	80.5	77.7	75.2	72.1	69.7	67.2
036*W	75	78.5	85.4	74.4	71.8	69.1	65.8	60.9	59.2
048*W	77	86.5	83.2	73.7	72.4	70.5	69.3	65.9	64.8
060*W	79	94.8	89.4	78.7	74.3	71.9	68.0	64.8	63.5
072*W	81	86.4	81.7	81.2	77.7	75.4	72.2	70.1	67.7

Notes:
[1] Outdoor sound data is measured in accordance with AHRI standard 270.
[2] Measurements are expressed in terms of sound power. Do not compare these values to sound pressure values because sound pressure depends on specific environment factors which normally do not match individual applications. Sound power values are independent of the environment and therefore more accurate.
[3] A-weighted sound ratings filter out high and very low frequencies, to better approximate the response of "average" human ear. A-weighted measurements for Daikin units are taken in accordance with AHRI standard 270.

			Outdoor Ambient Temperature																							
			65				75				85				95				105				115			
			Entering Indoor Wet Bulb Temperature																							
IDB	Airflow	ID WB	59	63	67	71	59	63	67	71	59	63	67	71	59	63	67	71	59	63	67	71	59	63	67	71
70	900	Capacity	36,741	37,266	38,375	-	36,409	36,933	38,042	-	35,439	35,963	37,073	-	33,771	34,295	35,404	-	31,732	32,256	33,366	-	29,870	30,395	31,504	-
		S/T	0.53	0.45	0.31	-	0.53	0.46	0.32	-	0.56	0.48	0.34	-	1.00	0.50	0.36	-	1.00	0.52	0.39	-	1.00	0.58	0.44	-
		Evap dT	21.04	19.21	15.81	-	20.99	19.16	15.76	-	21.24	19.42	16.01	-	20.97	19.14	15.74	-	20.72	18.90	15.49	-	21.87	20.04	16.64	-
		Pr Suc	126	128	131	-	134	136	139	-	141	142	146	-	147	148	151	-	152	154	157	-	159	161	164	-
		Pr Dis	261	262	264	-	302	304	305	-	346	347	349	-	393	394	396	-	443	445	446	-	497	498	500	-
		ODAmps	7.90	7.90	7.88	-	9.08	9.07	9.05	-	10.38	10.37	10.35	-	11.80	11.79	11.77	-	13.38	13.37	13.35	-	15.24	15.23	15.21	-
		TotalPower	2,081	2,079	2,074	-	2,351	2,348	2,344	-	2,651	2,649	2,645	-	2,977	2,975	2,970	-	3,340	3,338	3,334	-	3,767	3,765	3,760	-
	1190	Capacity	37,622	38,147	39,256	-	37,290	37,814	38,924	-	36,320	36,845	37,954	-	34,652	35,176	36,286	-	32,613	33,138	34,247	-	30,752	31,276	32,386	-
		S/T	0.68	0.60	0.46	-	0.68	0.60	0.47	-	1.00	0.63	0.49	-	1.00	0.65	0.51	-	1.00	0.67	0.53	-	1.00	1.00	0.59	-
		Evap dT	18.63	16.80	13.39	-	18.58	16.75	13.34	-	18.83	17.01	13.60	-	18.56	16.73	13.33	-	18.31	16.49	13.08	-	19.46	17.63	14.22	-
		Pr Suc	130	131	135	-	138	139	142	-	144	146	149	-	150	152	155	-	156	157	161	-	163	164	168	-
		Pr Dis	266	267	268	-	307	308	310	-	351	352	354	-	397	399	400	-	448	449	451	-	502	503	505	-
		ODAmps	8.04	8.03	8.01	-	9.21	9.20	9.18	-	10.52	10.51	10.49	-	11.93	11.92	11.90	-	13.51	13.50	13.48	-	15.37	15.36	15.34	-
		TotalPower	2,112	2,110	2,105	-	2,381	2,379	2,374	-	2,682	2,680	2,675	-	3,007	3,005	3,001	-	3,371	3,369	3,364	-	3,798	3,796	3,791	-
	1350	Capacity	38,257	38,782	39,891	-	37,925	38,449	39,559	-	36,955	37,480	38,589	-	35,287	35,811	36,921	-	33,248	33,772	34,882	-	31,386	31,911	33,020	-
		S/T	0.71	0.63	0.50	-	0.72	0.64	0.50	-	1.00	0.67	0.53	-	1.00	0.69	0.55	-	1.00	0.71	0.57	-	1.00	1.00	0.62	-
		Evap dT	17.63	15.81	12.40	-	17.58	15.76	12.35	-	17.84	16.01	12.61	-	17.56	15.74	12.33	-	17.32	15.50	12.09	-	18.46	16.64	13.23	-
		Pr Suc	132	134	137	-	140	141	145	-	147	148	151	-	152	154	157	-	158	160	163	-	165	167	170	-
		Pr Dis	268	269	271	-	309	311	312	-	353	354	356	-	400	401	403	-	450	451	453	-	504	505	507	-
		ODAmps	8.09	8.08	8.06	-	9.26	9.25	9.23	-	10.57	10.56	10.54	-	11.99	11.98	11.96	-	13.57	13.56	13.54	-	15.42	15.41	15.39	-
		TotalPower	2,124	2,122	2,118	-	2,394	2,392	2,387	-	2,694	2,692	2,688	-	3,020	3,018	3,013	-	3,384	3,381	3,377	-	3,810	3,808	3,803	-
75	900	Capacity	36,763	37,287	38,396	40,091	36,430	36,955	38,064	39,759	35,461	35,985	37,094	38,789	33,792	34,317	35,426	37,121	31,753	32,278	33,387	35,082	29,892	30,416	31,526	33,220
		S/T	0.66	0.58	0.44	0.30	1.00	0.59	0.45	0.30	1.00	0.61	0.47	0.33	1.00	0.63	0.49	0.35	1.00	0.65	0.52	0.37	1.00	1.00	0.57	0.42
		Evap dT	25.05	23.22	19.82	16.29	25.00	23.17	19.77	16.24	25.25	23.43	20.02	16.49	24.98	23.15	19.75	16.22	24.74	22.91	19.50	15.98	25.88	24.05	20.65	17.12
		Pr Suc	126	128	131	136	134	136	139	144	141	142	146	151	147	148	151	157	152	154	157	162	159	161	164	170
		Pr Dis	261	262	264	269	303	304	306	310	346	347	349	354	393	394	396	401	444	445	447	451	498	499	501	505
		ODAmps	7.90	7.89	7.87	7.96	9.07	9.06	9.04	9.13	10.38	10.37	10.35	10.44	11.79	11.78	11.76	11.85	13.37	13.36	13.34	13.43	15.23	15.22	15.20	15.29
		TotalPower	2,079	2,077	2,073	2,093	2,349	2,347	2,342	2,363	2,650	2,647	2,643	2,663	2,975	2,973	2,968	2,989	3,339	3,337	3,332	3,353	3,765	3,763	3,759	3,779
	1190	Capacity	37,644	38,169	39,278	40,972	37,312	37,836	38,945	40,640	36,342	36,866	37,976	39,670	34,674	**35,198**	36,307	38,002	32,635	33,159	34,269	35,963	30,773	31,298	32,407	34,102
		S/T	0.81	0.73	0.59	0.45	1.00	0.74	0.60	0.45	1.00	0.76	0.62	0.48	1.00	**0.78**	0.64	0.50	1.00	1.00	0.67	0.52	1.00	1.00	0.72	0.57
		Evap dT	22.64	20.81	17.41	13.88	22.59	20.76	17.36	13.83	22.84	21.02	17.61	14.08	22.57	**20.74**	17.34	13.81	22.32	20.50	17.09	13.56	23.47	21.64	18.24	14.71
		Pr Suc	130	131	135	140	138	139	142	148	144	146	149	155	150	**152**	155	160	156	157	161	166	163	164	168	173
		Pr Dis	266	267	269	273	307	308	310	315	351	352	354	358	398	**399**	401	405	448	449	451	456	502	503	505	510
		ODAmps	8.03	8.02	8.00	8.09	9.20	9.19	9.17	9.26	10.51	10.50	10.48	10.57	11.92	**11.92**	11.90	11.98	13.51	13.50	13.48	13.57	15.36	15.35	15.33	15.42
		TotalPower	2,110	2,108	2,103	2,124	2,379	2,377	2,373	2,393	2,680	2,678	2,673	2,694	3,006	**3,004**	2,999	3,020	3,369	3,367	3,363	3,383	3,796	3,794	3,789	3,810
	1350	Capacity	38,279	38,803	39,913	41,607	37,946	38,471	39,580	41,275	36,977	37,501	38,610	40,305	35,308	35,833	36,942	38,637	33,269	33,794	34,903	36,598	31,408	31,933	33,042	34,736
		S/T	0.84	0.77	0.63	0.48	1.00	0.77	0.63	0.49	1.00	0.80	0.66	0.51	1.00	0.82	0.68	0.53	1.00	1.00	0.70	0.56	1.00	1.00	0.75	0.61
		Evap dT	21.64	19.82	16.41	12.88	21.59	19.77	16.36	12.83	21.85	20.03	16.62	13.09	21.57	19.75	16.34	12.81	21.33	19.51	16.10	12.57	22.47	20.65	17.24	13.71
		Pr Suc	132	134	137	142	140	141	145	150	147	148	151	157	152	154	157	163	158	160	163	168	165	167	170	175
		Pr Dis	268	269	271	276	310	311	313	317	353	354	356	361	400	401	403	408	451	452	454	458	504	506	507	512
		ODAmps	8.08	8.08	8.06	8.15	9.26	9.25	9.23	9.32	10.56	10.55	10.53	10.62	11.98	11.97	11.95	12.04	13.56	13.55	13.53	13.62	15.42	15.41	15.39	15.48
		TotalPower	2,122	2,120	2,116	2,136	2,392	2,390	2,385	2,406	2,693	2,691	2,686	2,707	3,018	3,016	3,011	3,032	3,382	3,380	3,375	3,396	3,808	3,806	3,802	3,822

IDB: Entering Indoor Dry Bulb Temperature

Shaded area reflects ACCA (TVA) conditions

kW = Total system power

High and low pressures are measured at the liquid and suction access fittings.

Amps: Unit amps (comp.+ evaporator + condenser fan motors)

Design Subcooling, 16 - 19 °F @ the liquid access fitting connection ARI 95 test conditions. Design Superheat 8 - 12°F @ the compressor suction access fitting connection.

			Outdoor Ambient Temperature																							
			65				75				85				95				105				115			
			Entering Indoor Wet Bulb Temperature																							
IDB	Airflow	ID WB	59	63	67	71	59	63	67	71	59	63	67	71	59	63	67	71	59	63	67	71	59	63	67	71
80	900	Capacity	36,955	37,480	38,589	40,283	36,623	37,147	38,256	39,951	35,653	36,177	37,287	38,981	33,985	34,509	35,618	37,313	31,946	32,470	33,580	35,274	30,084	30,609	31,718	33,413
		S/T	1.00	0.71	0.57	0.42	1.00	0.71	0.58	0.43	1.00	0.74	0.60	0.46	1.00	1.00	0.62	0.48	1.00	1.00	0.64	0.50	1.00	1.00	0.70	0.55
		Evap dT	29.09	27.26	23.86	20.33	29.04	27.21	23.81	20.28	29.29	27.47	24.06	20.53	29.02	27.19	23.79	20.26	28.77	26.95	23.54	20.01	29.92	28.09	24.69	21.16
		Pr Suc	127	128	132	137	135	136	139	145	141	143	146	152	147	149	152	157	153	154	158	163	160	161	165	170
		Pr Dis	262	263	265	269	303	304	306	311	347	348	350	354	394	395	397	401	444	445	447	452	498	499	501	506
		ODAmps	7.90	7.89	7.87	7.96	9.07	9.07	9.05	9.14	10.38	10.37	10.35	10.44	11.80	11.79	11.77	11.86	13.38	13.37	13.35	13.44	15.23	15.22	15.20	15.29
		TotalPower	2,081	2,079	2,074	2,095	2,350	2,348	2,343	2,364	2,651	2,649	2,644	2,665	2,976	2,974	2,970	2,990	3,340	3,338	3,333	3,354	3,767	3,765	3,760	3,781
	1190	Capacity	37,836	38,361	39,470	41,165	37,504	38,028	39,138	40,832	36,534	37,059	38,168	39,863	34,866	35,390	**36,500**	38,194	32,827	33,352	34,461	36,155	30,966	31,490	32,600	34,294
		S/T	1.00	0.86	0.72	0.57	1.00	0.86	0.73	0.58	1.00	1.00	0.75	0.61	1.00	1.00	**0.77**	0.63	1.00	1.00	0.79	0.65	1.00	1.00	1.00	0.70
		Evap dT	26.67	24.85	21.44	17.92	26.63	24.80	21.39	17.87	26.88	25.06	21.65	18.12	26.61	24.78	**21.38**	17.85	26.36	24.54	21.13	17.60	27.50	25.68	22.27	18.74
		Pr Suc	130	132	135	141	138	140	143	148	145	147	150	155	151	152	**156**	161	156	158	161	167	163	165	168	174
		Pr Dis	266	267	269	274	308	309	311	315	351	352	354	359	398	399	**401**	406	449	450	452	456	503	504	506	510
		ODAmps	8.04	8.03	8.01	8.10	9.21	9.20	9.18	9.27	10.52	10.51	10.49	10.58	11.93	11.92	**11.90**	11.99	13.51	13.50	13.48	13.57	15.37	15.36	15.34	15.43
		TotalPower	2,111	2,109	2,105	2,125	2,381	2,379	2,374	2,395	2,682	2,679	2,675	2,695	3,007	3,005	**3,000**	3,021	3,371	3,369	3,364	3,385	3,797	3,795	3,791	3,811
	1350	Capacity	38,471	38,996	40,105	41,799	38,139	38,663	39,773	41,467	37,169	37,694	38,803	40,497	35,501	36,025	37,135	38,829	33,462	33,986	35,096	36,790	31,600	32,125	33,234	34,929
		S/T	1.00	0.89	0.75	0.61	1.00	0.90	0.76	0.62	1.00	1.00	0.79	0.64	1.00	1.00	0.81	0.66	1.00	1.00	0.83	0.68	1.00	1.00	1.00	0.74
		Evap dT	25.68	23.86	20.45	16.92	25.63	23.81	20.40	16.87	25.89	24.06	20.66	17.13	25.61	23.79	20.38	16.85	25.37	23.55	20.14	16.61	26.51	24.69	21.28	17.75
		Pr Suc	133	134	137	143	140	142	145	151	147	149	152	157	153	155	158	163	159	160	163	169	166	167	171	176
		Pr Dis	269	270	272	276	310	311	313	318	354	355	357	361	400	402	403	408	451	452	454	459	505	506	508	513
		ODAmps	8.09	8.08	8.06	8.15	9.26	9.25	9.23	9.32	10.57	10.56	10.54	10.63	11.99	11.98	11.96	12.05	13.57	13.56	13.54	13.63	15.42	15.41	15.39	15.48
		TotalPower	2,124	2,122	2,117	2,138	2,393	2,391	2,387	2,407	2,694	2,692	2,687	2,708	3,020	3,017	3,013	3,033	3,383	3,381	3,377	3,397	3,810	3,808	3,803	3,824
85	900	Capacity	37,581	38,105	39,215	40,909	37,248	37,773	38,882	40,577	36,279	36,803	37,912	39,607	34,610	35,135	36,244	37,939	32,571	33,096	34,205	35,900	30,710	31,235	32,344	34,038
		S/T	1.00	0.81	0.67	0.53	1.00	1.00	0.68	0.53	1.00	1.00	0.70	0.56	1.00	1.00	0.72	0.58	1.00	1.00	1.00	0.60	1.00	1.00	1.00	0.65
		Evap dT	32.67	30.84	27.44	23.91	32.62	30.79	27.39	23.86	32.87	31.05	27.64	24.11	32.60	30.77	27.37	23.84	32.36	30.53	27.12	23.60	33.50	31.67	28.27	24.74
		Pr Suc	129	130	134	139	136	138	141	147	143	145	148	154	149	151	154	159	155	156	160	165	162	163	167	172
		Pr Dis	263	264	266	270	304	306	307	312	348	349	351	356	395	396	398	402	445	446	448	453	499	500	502	507
		ODAmps	7.93	7.92	7.90	7.99	9.10	9.09	9.07	9.16	10.40	10.40	10.38	10.47	11.82	11.81	11.79	11.88	13.40	13.39	13.37	13.46	15.26	15.25	15.23	15.32
		TotalPower	2,086	2,084	2,079	2,100	2,355	2,353	2,349	2,369	2,656	2,654	2,649	2,670	2,982	2,979	2,975	2,995	3,345	3,343	3,339	3,359	3,772	3,770	3,765	3,786
	1190	Capacity	38,462	38,987	40,096	41,790	38,130	38,654	39,763	41,458	37,160	37,684	38,794	40,488	35,492	36,016	37,125	38,820	33,453	33,977	35,087	36,781	31,591	32,116	33,225	34,920
		S/T	1.00	0.96	0.82	0.68	1.00	1.00	0.83	0.68	1.00	1.00	0.85	0.71	1.00	1.00	0.87	0.73	1.00	1.00	1.00	0.75	1.000	1.000	1.000	0.803
		Evap dT	30.26	28.43	25.03	21.50	30.21	28.38	24.98	21.45	30.46	28.64	25.23	21.70	30.19	28.36	24.96	21.43	29.94	28.12	24.71	21.18	31.09	29.26	25.86	22.33
		Pr Suc	132	134	137	143	140	142	145	150	147	148	152	157	153	154	157	163	158	160	163	169	165	167	170	176
		Pr Dis	267	269	270	275	309	310	312	317	353	354	356	360	399	401	402	407	450	451	453	458	504	505	507	511
		ODAmps	8.06	8.05	8.03	8.12	9.23	9.22	9.20	9.29	10.54	10.53	10.51	10.60	11.95	11.94	11.92	12.01	13.53	13.52	13.50	13.59	15.39	15.38	15.36	15.45
		TotalPower	2,117	2,114	2,110	2,130	2,386	2,384	2,379	2,400	2,687	2,685	2,680	2,701	3,012	3,010	3,005	3,026	3,376	3,374	3,369	3,390	3,802	3,800	3,796	3,816
	1350	Capacity	39,097	39,621	40,731	42,425	38,764	39,289	40,398	42,093	37,795	38,319	39,429	41,123	36,126	36,651	37,760	39,455	34,088	34,612	35,721	37,416	32,226	32,751	33,860	35,554
		S/T	1.00	1.00	0.86	0.71	1.00	1.00	0.86	0.72	1.00	1.00	0.89	0.74	1.00	1.00	1.00	0.76	1.00	1.00	1.00	0.79	1.00	1.00	1.00	0.84
		Evap dT	29.26	27.44	24.03	20.50	29.21	27.39	23.98	20.45	29.47	27.65	24.24	20.71	29.20	27.37	23.96	20.44	28.95	27.13	23.72	20.19	30.09	28.27	24.86	21.33
		Pr Suc	135	136	139	145	142	144	147	153	149	151	154	159	155	156	160	165	161	162	165	171	168	169	172	178
		Pr Dis	270	271	273	277	311	312	314	319	355	356	358	362	402	403	405	409	452	453	455	460	506	507	509	514
		ODAmps	8.11	8.10	8.08	8.17	9.28	9.28	9.26	9.35	10.59	10.58	10.56	10.65	12.01	12.00	11.98	12.07	13.59	13.58	13.56	13.65	15.44	15.43	15.41	15.50
		TotalPower	2,129	2,127	2,122	2,143	2,398	2,396	2,392	2,412	2,699	2,697	2,693	2,713	3,025	3,023	3,018	3,039	3,388	3,386	3,382	3,402	3,815	3,813	3,808	3,829

IDB: Entering Indoor Dry Bulb Temperature Shaded area reflects ACCA (TVA) conditions **kW = Total system power**

High and low pressures are measured at the liquid and suction access fittings. **Amps: Unit amps (comp.+ evaporator + condenser fan motors)**

Design Subcooling, 16 - 19 °F @ the liquid access fitting connection ARI 95 test conditions. Design Superheat 8 - 12°F @ the compressor suction access fitting connection.

			Outdoor Ambient Temperature																							
			65				75				85				95				105				115			
			Entering Indoor Wet Bulb Temperature																							
IDB	Airflow	ID WB	59	63	67	71	59	63	67	71	59	63	67	71	59	63	67	71	59	63	67	71	59	63	67	71
70	1200	Capacity	47,910	48,589	50,027	-	47,479	48,159	49,596	-	46,222	46,902	48,340	-	44,060	44,740	46,178	-	41,418	42,098	43,536	-	39,006	39,686	41,123	-
		S/T	0.56	0.48	0.35	-	0.56	0.49	0.36	-	0.59	0.51	0.38	-	1.00	0.53	0.40	-	1.00	0.55	0.42	-	1.00	0.60	0.47	-
		Evap dT	20.36	18.52	15.09	-	20.31	18.47	15.04	-	20.56	18.73	15.30	-	20.29	18.45	15.02	-	20.04	18.20	14.77	-	21.19	19.35	15.92	-
		Pr Suc	124	125	129	-	131	133	136	-	138	140	143	-	144	145	148	-	149	151	154	-	156	158	161	-
		Pr Dis	266	267	269	-	308	309	311	-	352	353	355	-	399	400	402	-	450	451	453	-	505	506	508	-
		ODAmps	10.30	10.29	10.26	-	11.86	11.85	11.82	-	13.60	13.59	13.56	-	15.49	15.47	15.45	-	17.59	17.58	17.55	-	20.06	20.05	20.02	-
		TotalPower	2,763	2,760	2,754	-	3,121	3,119	3,112	-	3,522	3,519	3,513	-	3,955	3,952	3,946	-	4,439	4,436	4,430	-	5,006	5,004	4,997	-
	1450	Capacity	48,754	49,434	50,872	-	48,324	49,003	50,441	-	47,067	47,747	49,184	-	44,905	45,585	47,022	-	42,263	42,943	44,380	-	39,851	40,531	41,968	-
		S/T	0.64	0.57	0.44	-	0.65	0.58	0.45	-	0.67	0.60	0.47	-	1.00	0.62	0.49	-	1.00	0.64	0.51	-	1.00	0.69	0.56	-
		Evap dT	18.76	16.92	13.49	-	18.71	16.87	13.44	-	18.97	17.13	13.70	-	18.69	16.85	13.42	-	18.44	16.61	13.18	-	19.59	17.76	14.33	-
		Pr Suc	126	128	131	-	134	135	139	-	141	142	145	-	146	148	151	-	152	153	156	-	159	160	163	-
		Pr Dis	269	270	272	-	311	312	314	-	355	356	358	-	402	403	405	-	453	454	456	-	508	509	511	-
		ODAmps	10.42	10.41	10.38	-	11.98	11.97	11.94	-	13.72	13.71	13.68	-	15.60	15.59	15.56	-	17.71	17.69	17.67	-	20.17	20.16	20.14	-
		TotalPower	2,790	2,787	2,781	-	3,148	3,145	3,139	-	3,548	3,546	3,539	-	3,982	3,979	3,973	-	4,465	4,463	4,457	-	5,033	5,030	5,024	-
	1800	Capacity	50,357	51,037	52,475	-	49,927	50,606	52,044	-	48,670	49,350	50,787	-	46,508	47,188	48,625	-	43,866	44,546	45,983	-	41,454	42,133	43,571	-
		S/T	0.69	0.61	0.48	-	0.69	0.62	0.49	-	1.00	0.64	0.51	-	1.00	0.66	0.53	-	1.00	0.68	0.55	-	1.00	1.00	0.60	-
		Evap dT	17.05	15.21	11.78	-	17.00	15.16	11.73	-	17.26	15.42	11.99	-	16.98	15.14	11.71	-	16.74	14.90	11.47	-	17.89	16.05	12.62	-
		Pr Suc	131	132	135	-	138	140	143	-	145	146	149	-	150	152	155	-	156	157	161	-	163	164	167	-
		Pr Dis	273	274	276	-	315	316	318	-	359	360	362	-	406	408	410	-	458	459	461	-	512	513	515	-
		ODAmps	10.54	10.53	10.50	-	12.10	12.09	12.06	-	13.84	13.83	13.80	-	15.73	15.71	15.69	-	17.83	17.82	17.79	-	20.30	20.29	20.26	-
		TotalPower	2,818	2,815	2,809	-	3,177	3,174	3,168	-	3,577	3,574	3,568	-	4,010	4,007	4,001	-	4,494	4,491	4,485	-	5,062	5,059	5,053	-
75	1200	Capacity	47,938	48,618	50,055	52,251	47,507	48,187	49,624	51,820	46,250	46,930	48,368	50,564	44,089	44,768	46,206	48,402	41,446	42,126	43,564	45,759	39,034	39,714	41,151	43,347
		S/T	0.68	0.61	0.48	0.34	0.69	0.61	0.48	0.34	1.00	0.64	0.51	0.37	1.00	0.66	0.53	0.39	1.00	0.68	0.55	0.41	1.00	1.00	0.60	0.46
		Evap dT	24.40	22.56	19.13	15.57	24.35	22.51	19.08	15.52	24.60	22.77	19.34	15.78	24.33	22.49	19.06	15.50	24.08	22.24	18.81	15.26	25.23	23.39	19.96	16.41
		Pr Suc	124	125	129	134	131	133	136	141	138	140	143	148	144	145	148	154	149	151	154	159	156	158	161	166
		Pr Dis	266	267	269	273	308	309	311	315	352	353	355	359	399	400	402	407	450	452	453	458	505	506	508	513
		ODAmps	10.29	10.28	10.25	10.37	11.85	11.84	11.81	11.93	13.59	13.58	13.55	13.67	15.48	15.46	15.44	15.56	17.58	17.57	17.54	17.66	20.05	20.04	20.01	20.13
		TotalPower	2,760	2,758	2,752	2,779	3,119	3,116	3,110	3,138	3,519	3,516	3,510	3,538	3,952	3,950	3,943	3,971	4,436	4,434	4,427	4,455	5,004	5,001	4,995	5,023
	1450	Capacity	48,783	49,462	50,900	53,096	48,352	49,031	50,469	52,665	47,095	47,775	49,212	51,408	44,933	**45,613**	47,050	49,246	42,291	42,971	44,408	46,604	39,879	40,559	41,996	44,192
		S/T	0.77	0.70	0.56	0.43	1.00	0.70	0.57	0.43	1.00	0.73	0.59	0.46	1.00	**0.74**	0.61	0.47	1.00	0.77	0.63	0.50	1.00	1.00	0.68	0.55
		Evap dT	22.80	20.96	17.53	13.98	22.75	20.91	17.48	13.93	23.01	21.17	17.74	14.18	22.73	**20.89**	17.46	13.91	22.48	20.65	17.22	13.66	23.63	21.80	18.37	14.81
		Pr Suc	126	128	131	136	134	135	139	144	141	142	145	151	146	**148**	151	156	152	153	156	162	159	160	163	169
		Pr Dis	269	270	272	277	311	312	314	319	355	356	358	363	402	**404**	405	410	454	455	457	461	508	509	511	516
		ODAmps	10.41	10.40	10.37	10.49	11.97	11.96	11.93	12.05	13.71	13.70	13.67	13.79	15.59	**15.58**	15.55	15.67	17.70	17.68	17.66	17.78	20.16	20.15	20.13	20.25
		TotalPower	2,787	2,784	2,778	2,806	3,146	3,143	3,137	3,164	3,546	3,543	3,537	3,565	3,979	**3,976**	3,970	3,998	4,463	4,460	4,454	4,482	5,031	5,028	5,022	5,049
	1800	Capacity	50,385	51,065	52,503	54,699	49,955	50,634	52,072	54,268	48,698	49,378	50,815	53,011	46,536	47,216	48,653	50,849	43,894	44,574	46,011	48,207	41,482	42,162	43,599	45,795
		S/T	0.81	0.74	0.61	0.47	1.00	0.74	0.61	0.48	1.00	0.77	0.64	0.50	1.00	0.79	0.66	0.52	1.00	1.00	0.68	0.54	1.00	1.00	0.73	0.59
		Evap dT	21.09	19.25	15.82	12.27	21.04	19.20	15.77	12.22	21.30	19.46	16.03	12.48	21.02	19.18	15.75	12.20	20.78	18.94	15.51	11.95	21.93	20.09	16.66	13.10
		Pr Suc	131	132	135	141	138	140	143	148	145	146	149	155	150	152	155	160	156	157	161	166	163	164	167	173
		Pr Dis	273	274	276	281	315	316	318	323	359	360	362	367	407	408	410	414	458	459	461	466	512	514	515	520
		ODAmps	10.53	10.52	10.49	10.61	12.09	12.08	12.05	12.17	13.83	13.82	13.79	13.91	15.72	15.70	15.68	15.80	17.82	17.81	17.78	17.90	20.29	20.28	20.25	20.37
		TotalPower	2,816	2,813	2,807	2,834	3,174	3,171	3,165	3,193	3,575	3,572	3,566	3,593	4,008	4,005	3,999	4,026	4,492	4,489	4,483	4,510	5,059	5,057	5,050	5,078

IDB: Entering Indoor Dry Bulb Temperature Shaded area reflects ACCA (TVA) conditions **kW = Total system power**

High and low pressures are measured at the liquid and suction access fittings. **Amps: Unit amps (comp.+ evaporator + condenser fan motors)**

Design Subcooling, 16 - 19 °F @ the liquid access fitting connection ARI 95 test conditions. Design Superheat 8 - 12°F @ the compressor suction access fitting connection.

			Outdoor Ambient Temperature																							
			65				75				85				95				105				115			
			Entering Indoor Wet Bulb Temperature																							
IDB	Airflow	ID WB	59	63	67	71	59	63	67	71	59	63	67	71	59	63	67	71	59	63	67	71	59	63	67	71
80	1200	Capacity	48,187	48,867	50,304	52,500	47,756	48,436	49,874	52,069	46,500	47,179	48,617	50,813	44,338	45,018	46,455	48,651	41,696	42,375	43,813	46,009	39,283	39,963	41,401	43,597
		S/T	1.00	0.73	0.60	0.46	1.00	0.73	0.60	0.47	1.00	0.76	0.63	0.49	1.00	1.00	0.65	0.51	1.00	1.00	0.67	0.53	1.00	1.00	0.72	0.58
		Evap dT	28.46	26.63	23.20	19.64	28.41	26.58	23.15	19.59	28.67	26.83	23.40	19.85	28.39	26.56	23.13	19.57	28.15	26.31	22.88	19.33	29.30	27.46	24.03	20.48
		Pr Suc	124	126	129	134	132	134	137	142	139	140	143	149	144	146	149	154	150	151	154	160	157	158	161	167
		Pr Dis	266	267	269	274	308	309	311	316	352	353	355	360	400	401	403	407	451	452	454	459	505	507	508	513
		ODAmps	10.30	10.29	10.26	10.38	11.86	11.85	11.82	11.94	13.60	13.59	13.56	13.68	15.48	15.47	15.44	15.56	17.59	17.58	17.55	17.67	20.06	20.04	20.02	20.14
		TotalPower	2,762	2,760	2,753	2,781	3,121	3,118	3,112	3,139	3,521	3,518	3,512	3,540	3,954	3,951	3,945	3,973	4,438	4,435	4,429	4,457	5,006	5,003	4,997	5,024
	1450	Capacity	49,032	49,712	51,149	53,345	48,601	49,281	50,718	52,914	47,344	48,024	49,462	51,658	45,182	45,862	**47,300**	49,496	42,540	43,220	44,658	46,853	40,128	40,808	42,245	44,441
		S/T	1.00	0.82	0.69	0.55	1.00	0.82	0.69	0.55	1.00	0.85	0.72	0.58	1.00	1.00	**0.73**	0.60	1.00	1.00	0.76	0.62	1.00	1.00	0.81	0.67
		Evap dT	26.87	25.03	21.60	18.04	26.82	24.98	21.55	17.99	27.07	25.24	21.81	18.25	26.80	24.96	**21.53**	17.97	26.55	24.71	21.28	17.73	27.70	25.86	22.43	18.88
		Pr Suc	127	128	132	137	134	136	139	145	141	143	146	151	147	148	**151**	157	152	154	157	162	159	161	164	169
		Pr Dis	269	271	272	277	311	313	314	319	355	357	359	363	403	404	**406**	411	454	455	457	462	509	510	512	516
		ODAmps	10.42	10.41	10.38	10.50	11.98	11.96	11.94	12.06	13.72	13.70	13.68	13.80	15.60	15.59	**15.56**	15.68	17.70	17.69	17.67	17.78	20.17	20.16	20.13	20.25
		TotalPower	2,789	2,786	2,780	2,808	3,148	3,145	3,139	3,166	3,548	3,545	3,539	3,566	3,981	3,978	**3,972**	4,000	4,465	4,462	4,456	4,483	5,033	5,030	5,024	5,051
	1800	Capacity	50,635	51,314	52,752	54,948	50,204	50,884	52,321	54,517	48,947	49,627	51,065	53,260	46,785	47,465	48,903	51,099	44,143	44,823	46,260	48,456	41,731	42,411	43,848	46,044
		S/T	1.00	0.86	0.73	0.59	1.00	0.87	0.73	0.60	1.00	1.00	0.76	0.62	1.00	1.00	0.78	0.64	1.00	1.00	0.80	0.66	1.00	1.00	1.00	0.71
		Evap dT	25.16	23.32	19.89	16.33	25.11	23.27	19.84	16.28	25.37	23.53	20.10	16.54	25.09	23.25	19.82	16.27	24.84	23.01	19.57	16.02	25.99	24.16	20.72	17.17
		Pr Suc	131	133	136	141	139	140	143	149	145	147	150	155	151	152	156	161	156	158	161	166	163	165	168	173
		Pr Dis	274	275	277	281	316	317	319	323	360	361	363	367	407	408	410	415	458	459	461	466	513	514	516	521
		ODAmps	10.54	10.53	10.50	10.62	12.10	12.09	12.06	12.18	13.84	13.83	13.80	13.92	15.72	15.71	15.69	15.80	17.83	17.82	17.79	17.91	20.30	20.28	20.26	20.38
		TotalPower	2,818	2,815	2,809	2,836	3,176	3,173	3,167	3,195	3,576	3,574	3,567	3,595	4,010	4,007	4,001	4,028	4,493	4,491	4,485	4,512	5,061	5,058	5,052	5,080
85	1200	Capacity	48,998	49,678	51,115	53,311	48,567	49,247	50,684	52,880	47,311	47,990	49,428	51,624	45,149	45,828	47,266	49,462	42,506	43,186	44,624	46,820	40,094	40,774	42,212	44,407
		S/T	1.00	0.83	0.70	0.56	1.00	0.83	0.70	0.56	1.00	1.00	0.73	0.59	1.00	1.00	0.74	0.61	1.00	1.00	0.77	0.63	1.00	1.00	1.00	0.68
		Evap dT	32.07	30.23	26.80	23.25	32.02	30.18	26.75	23.20	32.28	30.44	27.01	23.46	32.00	30.16	26.73	23.18	31.76	29.92	26.49	22.93	32.91	31.07	27.64	24.08
		Pr Suc	126	128	131	136	134	135	139	144	140	142	145	151	146	148	151	156	152	153	156	162	159	160	163	169
		Pr Dis	267	269	271	275	310	311	313	317	354	355	357	361	401	402	404	409	452	453	455	460	507	508	510	514
		ODAmps	10.33	10.32	10.29	10.41	11.89	11.88	11.85	11.97	13.63	13.62	13.59	13.71	15.51	15.50	15.47	15.59	17.62	17.61	17.58	17.70	20.09	20.07	20.05	20.17
		TotalPower	2,769	2,766	2,760	2,788	3,128	3,125	3,119	3,146	3,528	3,525	3,519	3,546	3,961	3,958	3,952	3,980	4,445	4,442	4,436	4,464	5,013	5,010	5,004	5,031
	1450	Capacity	49,843	50,522	51,960	54,156	49,412	50,092	51,529	53,725	48,155	48,835	50,273	52,468	45,993	46,673	48,111	50,306	43,351	44,031	45,468	47,664	40,939	41,619	43,056	45,252
		S/T	1.00	0.91	0.78	0.64	1.00	1.00	0.79	0.65	1.00	1.00	0.81	0.68	1.00	1.00	0.83	0.69	1.00	1.00	1.00	0.72	1.000	1.000	1.000	0.765
		Evap dT	30.47	28.64	25.20	21.65	30.42	28.59	25.15	21.60	30.68	28.84	25.41	21.86	30.40	28.57	25.14	21.58	30.16	28.32	24.89	21.34	31.31	29.47	26.04	22.49
		Pr Suc	129	130	133	139	136	138	141	146	143	145	148	153	149	150	153	159	154	156	159	164	161	163	166	171
		Pr Dis	271	272	274	278	313	314	316	320	357	358	360	364	404	405	407	412	455	456	458	463	510	511	513	518
		ODAmps	10.45	10.44	10.41	10.53	12.01	11.99	11.97	12.09	13.75	13.73	13.71	13.83	15.63	15.62	15.59	15.71	17.73	17.72	17.70	17.81	20.20	20.19	20.16	20.28
		TotalPower	2,796	2,793	2,787	2,815	3,155	3,152	3,146	3,173	3,555	3,552	3,546	3,573	3,988	3,985	3,979	4,006	4,472	4,469	4,463	4,490	5,040	5,037	5,031	5,058
	1800	Capacity	51,446	52,125	53,563	55,759	51,015	51,695	53,132	55,328	49,758	50,438	51,875	54,071	47,596	48,276	49,714	51,909	44,954	45,634	47,071	49,267	42,542	43,222	44,659	46,855
		S/T	1.00	0.96	0.83	0.69	1.00	1.00	0.83	0.69	1.00	1.00	0.86	0.72	1.00	1.00	0.88	0.74	1.00	1.00	1.00	0.76	1.00	1.00	1.00	0.81
		Evap dT	28.76	26.93	23.50	19.94	28.71	26.88	23.45	19.89	28.97	27.14	23.70	20.15	28.70	26.86	23.43	19.87	28.45	26.61	23.18	19.63	29.60	27.76	24.33	20.78
		Pr Suc	133	134	138	143	141	142	145	151	147	149	152	157	153	154	157	163	158	160	163	168	165	167	170	175
		Pr Dis	275	276	278	283	317	318	320	325	361	362	364	369	408	410	411	416	460	461	463	467	514	515	517	522
		ODAmps	10.57	10.56	10.53	10.65	12.13	12.12	12.09	12.21	13.87	13.86	13.83	13.95	15.75	15.74	15.71	15.83	17.86	17.85	17.82	17.94	20.33	20.31	20.29	20.41
		TotalPower	2,824	2,822	2,816	2,843	3,183	3,180	3,174	3,202	3,583	3,580	3,574	3,602	4,016	4,014	4,007	4,035	4,500	4,498	4,491	4,519	5,068	5,065	5,059	5,087

IDB: Entering Indoor Dry Bulb Temperature Shaded area reflects ACCA (TVA) conditions **kW = Total system power**

High and low pressures are measured at the liquid and suction access fittings. **Amps: Unit amps (comp.+ evaporator + condenser fan motors)**

Design Subcooling, 16 - 19 °F @ the liquid access fitting connection ARI 95 test conditions. Design Superheat 8 - 12°F @ the compressor suction access fitting connection.

			Outdoor Ambient Temperature																							
			65				75				85				95				105				115			
			Entering Indoor Wet Bulb Temperature																							
IDB	Airflow	ID WB	59	63	67	71	59	63	67	71	59	63	67	71	59	63	67	71	59	63	67	71	59	63	67	71
70	1500	Capacity	58,659	59,493	61,255	-	58,131	58,964	60,727	-	56,590	57,424	59,186	-	53,939	54,773	56,535	-	50,699	51,533	53,295	-	47,741	48,575	50,338	-
		S/T	0.55	0.48	0.34	-	0.56	0.48	0.35	-	0.58	0.51	0.38	-	1.00	0.53	0.39	-	1.00	0.55	0.42	-	1.00	0.60	0.47	-
		Evap dT	20.10	18.30	14.95	-	20.05	18.25	14.90	-	20.31	18.51	15.15	-	20.03	18.24	14.88	-	19.79	18.00	14.64	-	20.92	19.12	15.76	-
		Pr Suc	125	126	129	-	132	134	137	-	139	141	144	-	145	146	149	-	150	152	155	-	157	159	162	-
		Pr Dis	264	265	267	-	306	307	309	-	350	351	353	-	397	399	400	-	448	450	451	-	503	504	506	-
		ODAmps	12.18	12.16	12.13	-	14.01	13.99	13.96	-	16.05	16.04	16.00	-	18.26	18.25	18.21	-	20.73	20.72	20.68	-	23.63	23.61	23.58	-
		TotalPower	3,436	3,433	3,426	-	3,857	3,854	3,846	-	4,327	4,323	4,316	-	4,835	4,832	4,824	-	5,403	5,400	5,392	-	6,069	6,066	6,059	-
	1850	Capacity	59,783	60,617	62,380	-	59,255	60,089	61,851	-	57,714	58,548	60,311	-	55,063	55,897	57,660	-	51,823	52,657	54,420	-	48,866	49,699	51,462	-
		S/T	0.65	0.58	0.45	-	0.66	0.58	0.45	-	0.68	0.61	0.48	-	1.00	0.63	0.50	-	1.00	0.65	0.52	-	1.00	0.70	0.57	-
		Evap dT	18.36	16.56	13.20	-	18.31	16.51	13.15	-	18.56	16.76	13.41	-	18.29	16.49	13.13	-	18.05	16.25	12.89	-	19.18	17.38	14.02	-
		Pr Suc	127	129	132	-	135	137	140	-	142	143	147	-	147	149	152	-	153	155	158	-	160	162	165	-
		Pr Dis	268	269	271	-	310	311	313	-	354	355	357	-	401	402	404	-	452	453	455	-	506	507	509	-
		ODAmps	12.33	12.32	12.29	-	14.16	14.15	14.12	-	16.20	16.19	16.16	-	18.41	18.40	18.37	-	20.88	20.87	20.84	-	23.78	23.76	23.73	-
		TotalPower	3,471	3,468	3,461	-	3,892	3,889	3,881	-	4,362	4,358	4,351	-	4,870	4,867	4,859	-	5,438	5,435	5,427	-	6,104	6,101	6,094	-
	2250	Capacity	61,510	62,344	64,107	-	60,982	61,816	63,578	-	59,441	60,275	62,038	-	56,790	57,624	59,387	-	53,550	54,384	56,147	-	50,593	51,426	53,189	-
		S/T	0.70	0.62	0.49	-	0.70	0.63	0.49	-	1.00	0.65	0.52	-	1.00	0.67	0.54	-	1.00	0.69	0.56	-	1.00	1.00	0.61	-
		Evap dT	16.84	15.05	11.69	-	16.79	15.00	11.64	-	17.05	15.25	11.89	-	16.78	14.98	11.62	-	16.54	14.74	11.38	-	17.66	15.86	12.51	-
		Pr Suc	131	133	136	-	139	140	144	-	146	147	150	-	151	153	156	-	157	158	162	-	164	165	168	-
		Pr Dis	272	273	275	-	314	315	317	-	357	359	360	-	405	406	408	-	456	457	459	-	510	511	513	-
		ODAmps	12.46	12.45	12.42	-	14.29	14.28	14.25	-	16.33	16.32	16.29	-	18.54	18.53	18.50	-	21.01	21.00	20.97	-	23.91	23.90	23.86	-
		TotalPower	3,501	3,498	3,491	-	3,922	3,919	3,912	-	4,392	4,389	4,381	-	4,900	4,897	4,890	-	5,468	5,465	5,458	-	6,134	6,131	6,124	-
75	1500	Capacity	58,694	59,527	61,290	63,982	58,165	58,999	60,762	63,454	56,625	57,458	59,221	61,913	53,973	54,807	56,570	59,262	50,734	51,567	53,330	56,022	47,776	48,609	50,372	53,065
		S/T	0.68	0.60	0.47	0.33	0.68	0.61	0.48	0.34	1.00	0.63	0.50	0.36	1.00	0.65	0.52	0.38	1.00	0.68	0.54	0.40	1.00	1.00	0.59	0.45
		Evap dT	24.06	22.26	18.90	15.42	24.01	22.21	18.85	15.37	24.26	22.46	19.10	15.62	23.99	22.19	18.83	15.35	23.75	21.95	18.59	15.11	24.87	23.07	19.72	16.24
		Pr Suc	125	126	130	135	132	134	137	143	139	141	144	149	145	146	150	155	150	152	155	160	157	159	162	167
		Pr Dis	265	266	268	272	306	308	309	314	350	352	353	358	398	399	401	405	449	450	452	456	503	504	506	511
		ODAmps	12.17	12.15	12.12	12.26	14.00	13.98	13.95	14.09	16.04	16.02	15.99	16.13	18.25	18.23	18.20	18.34	20.72	20.70	20.67	20.81	23.61	23.60	23.57	23.71
		TotalPower	3,433	3,430	3,423	3,455	3,854	3,851	3,844	3,876	4,324	4,321	4,313	4,346	4,832	4,829	4,822	4,854	5,400	5,397	5,390	5,422	6,066	6,063	6,056	6,088
	1850	Capacity	59,818	60,651	62,414	65,107	59,290	60,123	61,886	64,578	57,749	58,582	60,345	63,038	55,098	**55,931**	57,694	60,387	51,858	52,691	54,454	57,147	48,900	49,734	51,496	54,189
		S/T	0.78	0.71	0.57	0.43	1.00	0.71	0.58	0.44	1.00	0.74	0.60	0.46	1.00	**0.75**	0.62	0.48	1.00	1.00	0.64	0.50	1.00	1.00	0.69	0.55
		Evap dT	22.31	20.51	17.16	13.68	22.26	20.46	17.11	13.63	22.51	20.72	17.36	13.88	22.24	**20.45**	17.09	13.61	22.00	20.20	16.85	13.37	23.13	21.33	17.97	14.49
		Pr Suc	128	129	132	138	135	137	140	145	142	143	147	152	148	**149**	152	158	153	155	158	163	160	162	165	170
		Pr Dis	268	269	271	276	310	311	313	318	354	355	357	361	401	**402**	404	409	452	453	455	460	506	508	509	514
		ODAmps	12.32	12.31	12.27	12.41	14.15	14.13	14.10	14.24	16.19	16.18	16.15	16.29	18.40	**18.39**	18.36	18.50	20.87	20.86	20.82	20.96	23.77	23.75	23.72	23.86
		TotalPower	3,468	3,465	3,458	3,490	3,889	3,886	3,879	3,911	4,359	4,356	4,348	4,381	4,867	**4,864**	4,857	4,889	5,435	5,432	5,425	5,457	6,101	6,098	6,091	6,123
	2250	Capacity	61,545	62,378	64,141	66,834	61,017	61,850	63,613	66,305	59,476	60,309	62,072	64,765	56,825	57,658	59,421	62,113	53,585	54,418	56,181	58,874	50,627	51,460	53,223	55,916
		S/T	0.82	0.75	0.62	0.48	1.00	0.75	0.62	0.48	1.00	0.78	0.65	0.51	1.00	0.80	0.67	0.53	1.00	1.00	0.69	0.55	1.00	1.00	0.74	0.60
		Evap dT	20.80	19.00	15.64	12.16	20.75	18.95	15.59	12.11	21.00	19.20	15.85	12.37	20.73	18.93	15.57	12.10	20.49	18.69	15.33	11.86	21.62	19.82	16.46	12.98
		Pr Suc	131	133	136	141	139	140	144	149	146	147	150	156	151	153	156	161	157	158	162	167	164	165	169	174
		Pr Dis	272	273	275	280	314	315	317	321	358	359	361	365	405	406	408	413	456	457	459	464	510	511	513	518
		ODAmps	12.45	12.44	12.41	12.55	14.28	14.27	14.23	14.37	16.32	16.31	16.28	16.42	18.53	18.52	18.49	18.63	21.00	20.99	20.96	21.10	23.90	23.88	23.85	23.99
		TotalPower	3,499	3,495	3,488	3,520	3,920	3,916	3,909	3,941	4,389	4,386	4,379	4,411	4,898	4,894	4,887	4,919	5,465	5,462	5,455	5,487	6,132	6,128	6,121	6,153

IDB: Entering Indoor Dry Bulb Temperature

Shaded area reflects ACCA (TVA) conditions

kW = Total system power

High and low pressures are measured at the liquid and suction access fittings.

Amps: Unit amps (comp.+ evaporator + condenser fan motors)

Design Subcooling, 16 - 19 °F @ the liquid access fitting connection ARI 95 test conditions. Design Superheat 8 - 12°F @ the compressor suction access fitting connection.

			Outdoor Ambient Temperature																							
			65				75				85				95				105				115			
			Entering Indoor Wet Bulb Temperature																							
IDB	Airflow	ID WB	59	63	67	71	59	63	67	71	59	63	67	71	59	63	67	71	59	63	67	71	59	63	67	71
80	1500	Capacity	58,999	59,833	61,595	64,288	58,471	59,305	61,067	63,760	56,930	57,764	59,526	62,219	54,279	55,113	56,875	59,568	51,039	51,873	53,635	56,328	48,081	48,915	50,678	53,370
		S/T	1.00	0.73	0.59	0.45	1.00	0.73	0.60	0.46	1.00	0.76	0.62	0.48	1.00	1.00	0.64	0.50	1.00	1.00	0.67	0.53	1.00	1.00	0.72	0.58
		Evap dT	28.04	26.24	22.88	19.40	27.99	26.19	22.83	19.35	28.24	26.44	23.08	19.61	27.97	26.17	22.81	19.33	27.73	25.93	22.57	19.09	28.85	27.06	23.70	20.22
		Pr Suc	125	127	130	135	133	135	138	143	140	141	144	150	145	147	150	155	151	152	156	161	158	159	163	168
		Pr Dis	265	266	268	273	307	308	310	315	351	352	354	358	398	399	401	406	449	450	452	457	503	505	506	511
		ODAmps	12.18	12.16	12.13	12.27	14.01	13.99	13.96	14.10	16.05	16.03	16.00	16.14	18.26	18.24	18.21	18.35	20.73	20.71	20.68	20.82	23.62	23.61	23.58	23.72
		TotalPower	3,436	3,432	3,425	3,457	3,856	3,853	3,846	3,878	4,326	4,323	4,316	4,348	4,834	4,831	4,824	4,856	5,402	5,399	5,392	5,424	6,069	6,065	6,058	6,090
	1850	Capacity	60,124	60,957	62,720	65,412	59,595	60,429	62,192	64,884	58,055	58,888	60,651	63,343	55,403	56,237	**58,000**	60,692	52,164	52,997	54,760	57,452	49,206	50,039	51,802	54,495
		S/T	1.00	0.83	0.70	0.55	1.00	0.83	0.70	0.56	1.00	0.86	0.73	0.59	1.00	1.00	**0.74**	0.60	1.00	1.00	0.77	0.63	1.00	1.00	0.82	0.68
		Evap dT	26.29	24.49	21.14	17.66	26.24	24.44	21.09	17.61	26.50	24.70	21.34	17.86	26.22	24.43	**21.07**	17.59	25.98	24.19	20.83	17.35	27.11	25.31	21.95	18.48
		Pr Suc	128	130	133	138	136	137	140	146	142	144	147	153	148	150	**153**	158	154	155	158	164	161	162	165	171
		Pr Dis	269	270	272	276	310	312	313	318	354	355	357	362	402	403	**405**	409	453	454	456	460	507	508	510	515
		ODAmps	12.33	12.31	12.28	12.42	14.16	14.14	14.11	14.25	16.20	16.19	16.16	16.30	18.41	18.40	**18.37**	18.51	20.88	20.87	20.83	20.97	23.78	23.76	23.73	23.87
		TotalPower	3,471	3,467	3,460	3,492	3,891	3,888	3,881	3,913	4,361	4,358	4,351	4,383	4,869	4,866	**4,859**	4,891	5,437	5,434	5,427	5,459	6,104	6,100	6,093	6,125
	2250	Capacity	61,851	62,684	64,447	67,139	61,322	62,156	63,918	66,611	59,781	60,615	62,378	65,070	57,130	57,964	59,727	62,419	53,890	54,724	56,487	59,179	50,933	51,766	53,529	56,221
		S/T	1.00	0.87	0.74	0.60	1.00	0.88	0.74	0.60	1.00	1.00	0.77	0.63	1.00	1.00	0.79	0.65	1.00	1.00	0.81	0.67	1.00	1.00	1.00	0.72
		Evap dT	24.78	22.98	19.62	16.14	24.73	22.93	19.57	16.09	24.98	23.18	19.83	16.35	24.71	22.91	19.55	16.08	24.47	22.67	19.31	15.84	25.60	23.80	20.44	16.96
		Pr Suc	132	133	137	142	139	141	144	150	146	148	151	156	152	153	157	162	157	159	162	167	164	166	169	174
		Pr Dis	272	274	275	280	314	315	317	322	358	359	361	366	405	407	408	413	456	458	459	464	511	512	514	518
		ODAmps	12.46	12.45	12.41	12.55	14.29	14.28	14.24	14.38	16.33	16.32	16.29	16.43	18.54	18.53	18.50	18.64	21.01	21.00	20.97	21.11	23.91	23.89	23.86	24.00
		TotalPower	3,501	3,498	3,490	3,523	3,922	3,918	3,911	3,943	4,391	4,388	4,381	4,413	4,900	4,896	4,889	4,921	5,468	5,464	5,457	5,489	6,134	6,131	6,123	6,156
85	1500	Capacity	59,994	60,827	62,590	65,282	59,465	60,299	62,062	64,754	57,924	58,758	60,521	63,213	55,273	56,107	57,870	60,562	52,034	52,867	54,630	57,322	49,076	49,909	51,672	54,365
		S/T	1.00	0.83	0.69	0.55	1.00	1.00	0.70	0.56	1.00	1.00	0.72	0.58	1.00	1.00	0.74	0.60	1.00	1.00	0.76	0.62	1.00	1.00	1.00	0.68
		Evap dT	31.57	29.77	26.41	22.93	31.52	29.72	26.36	22.88	31.77	29.97	26.61	23.14	31.50	29.70	26.34	22.86	31.26	29.46	26.10	22.62	32.38	30.59	27.23	23.75
		Pr Suc	127	129	132	137	135	136	140	145	142	143	146	152	147	149	152	157	153	154	158	163	160	161	164	170
		Pr Dis	266	267	269	274	308	309	311	316	352	353	355	360	399	401	402	407	450	451	453	458	505	506	508	512
		ODAmps	12.21	12.20	12.17	12.31	14.04	14.03	14.00	14.14	16.08	16.07	16.04	16.18	18.29	18.28	18.25	18.39	20.76	20.75	20.72	20.86	23.66	23.64	23.61	23.75
		TotalPower	3,444	3,440	3,433	3,465	3,864	3,861	3,854	3,886	4,334	4,331	4,324	4,356	4,842	4,839	4,832	4,864	5,410	5,407	5,400	5,432	6,077	6,073	6,066	6,098
	1850	Capacity	61,118	61,951	63,714	66,407	60,590	61,423	63,186	65,878	59,049	59,882	61,645	64,338	56,398	57,231	58,994	61,687	53,158	53,991	55,754	58,447	50,200	51,033	52,796	55,489
		S/T	1.00	0.93	0.79	0.65	1.00	1.00	0.80	0.66	1.00	1.00	0.83	0.68	1.00	1.00	0.84	0.70	1.00	1.00	1.00	0.73	1.000	1.000	1.000	0.776
		Evap dT	29.82	28.02	24.67	21.19	29.77	27.97	24.62	21.14	30.03	28.23	24.87	21.39	29.75	27.96	24.60	21.12	29.51	27.72	24.36	20.88	30.64	28.84	25.48	22.01
		Pr Suc	130	132	135	140	138	139	142	148	144	146	149	154	150	152	155	160	156	157	160	166	162	164	167	173
		Pr Dis	270	271	273	277	312	313	315	319	356	357	359	363	403	404	406	411	454	455	457	461	508	509	511	516
		ODAmps	12.36	12.35	12.32	12.46	14.19	14.18	14.15	14.29	16.24	16.22	16.19	16.33	18.45	18.43	18.40	18.54	20.91	20.90	20.87	21.01	23.81	23.80	23.77	23.91
		TotalPower	3,479	3,475	3,468	3,500	3,900	3,896	3,889	3,921	4,369	4,366	4,359	4,391	4,878	4,874	4,867	4,899	5,445	5,442	5,435	5,467	6,112	6,108	6,101	6,133
	2250	Capacity	62,845	63,678	65,441	68,134	62,317	63,150	64,913	67,605	60,776	61,609	63,372	66,064	58,125	58,958	60,721	63,413	54,885	55,718	57,481	60,174	51,927	52,760	54,523	57,216
		S/T	1.00	0.97	0.84	0.70	1.00	1.00	0.84	0.70	1.00	1.00	0.87	0.73	1.00	1.00	1.00	0.75	1.00	1.00	1.00	0.77	1.00	1.00	1.00	0.82
		Evap dT	28.31	26.51	23.15	19.67	28.26	26.46	23.10	19.62	28.51	26.71	23.36	19.88	28.24	26.44	23.08	19.61	28.00	26.20	22.84	19.37	29.13	27.33	23.97	20.49
		Pr Suc	134	135	138	144	141	143	146	151	148	150	153	158	154	155	158	164	159	161	164	169	166	168	171	176
		Pr Dis	274	275	277	281	316	317	319	323	359	361	362	367	407	408	410	414	458	459	461	465	512	513	515	520
		ODAmps	12.50	12.48	12.45	12.59	14.33	14.31	14.28	14.42	16.37	16.35	16.32	16.46	18.58	18.56	18.53	18.67	21.05	21.03	21.00	21.14	23.94	23.93	23.90	24.04
		TotalPower	3,509	3,506	3,498	3,531	3,930	3,926	3,919	3,951	4,399	4,396	4,389	4,421	4,908	4,904	4,897	4,929	5,476	5,472	5,465	5,497	6,142	6,139	6,131	6,164

IDB: Entering Indoor Dry Bulb Temperature Shaded area reflects ACCA (TVA) conditions **kW = Total system power**

High and low pressures are measured at the liquid and suction access fittings. **Amps: Unit amps (comp.+ evaporator + condenser fan motors)**

Design Subcooling, 16 - 19 °F @ the liquid access fitting connection ARI 95 test conditions. Design Superheat 8 - 12°F @ the compressor suction access fitting connection.

			Outdoor Ambient Temperature																							
			65				75				85				95				105				115			
			Entering Indoor Wet Bulb Temperature																							
IDB	Airflow	ID WB	59	63	67	71	59	63	67	71	59	63	67	71	59	63	67	71	59	63	67	71	59	63	67	71
70	1800	Capacity	72,916	73,950	76,139	-	72,260	73,295	75,483	-	70,347	71,382	73,570	-	67,056	68,091	70,279	-	63,034	64,069	66,257	-	59,363	60,397	62,585	-
		S/T	0.56	0.49	0.35	-	0.57	0.49	0.36	-	0.59	0.52	0.38	-	1.00	0.54	0.40	-	1.00	0.56	0.42	-	1.00	0.61	0.47	-
		Evap dT	19.97	18.17	14.80	-	19.92	18.12	14.76	-	20.17	18.37	15.01	-	19.90	18.10	14.74	-	19.66	17.86	14.50	-	20.79	18.98	15.62	-
		Pr Suc	124.48	126.03	129.21	-	132.10	133.64	136.83	-	138.77	140.31	143.50	-	144.41	145.95	149.14	-	149.94	151.49	154.68	-	156.87	158.42	161.61	-
		Pr Dis	268.63	269.80	271.69	-	311.17	312.34	314.24	-	355.74	356.91	358.80	-	403.73	404.90	406.79	-	455.47	456.64	458.53	-	510.69	511.86	513.75	-
		TotalPower	4,215	4,211	4,202	-	4,743	4,739	4,730	-	5,333	5,329	5,320	-	5,972	5,968	5,959	-	6,685	6,681	6,672	-	7,522	7,518	7,509	-
	2180	Capacity	74,214	75,249	77,437	-	73,558	74,593	76,781	-	71,645	72,680	74,868	-	68,355	69,389	71,577	-	64,333	65,367	67,555	-	60,661	61,695	63,884	-
		S/T	0.65	0.58	0.44	-	0.66	0.58	0.45	-	0.68	0.61	0.47	-	1.00	0.63	0.49	-	1.00	0.65	0.51	-	1.00	0.70	0.56	-
		Evap dT	18.38	16.58	13.22	-	18.33	16.53	13.17	-	18.58	16.78	13.42	-	18.31	16.51	13.15	-	18.07	16.27	12.91	-	19.20	17.40	14.04	-
		Pr Suc	127.02	128.56	131.75	-	134.63	136.18	139.37	-	141.30	142.85	146.04	-	146.94	148.49	151.68	-	152.48	154.03	157.21	-	159.41	160.96	164.14	-
		Pr Dis	271.88	273.05	274.95	-	314.42	315.59	317.49	-	358.99	360.16	362.05	-	406.98	408.15	410.04	-	458.72	459.89	461.79	-	513.94	515.11	517.00	-
		TotalPower	4,255	4,251	4,242	-	4,783	4,779	4,770	-	5,373	5,369	5,360	-	6,012	6,008	5,999	-	6,725	6,721	6,712	-	7,562	7,558	7,549	-
	2400	Capacity	75,130	76,165	78,353	-	74,474	75,509	77,697	-	72,562	73,596	75,784	-	69,271	70,305	72,494	-	65,249	66,283	68,472	-	61,577	62,612	64,800	-
		S/T	0.68	0.60	0.47	-	0.68	0.61	0.48	-	0.71	0.63	0.50	-	1.00	0.65	0.52	-	1.00	0.68	0.54	-	1.00	0.73	0.59	-
		Evap dT	17.63	15.83	12.47	-	17.58	15.78	12.42	-	17.83	16.03	12.67	-	17.56	15.76	12.40	-	17.32	15.52	12.16	-	18.45	16.65	13.29	-
		Pr Suc	128.64	130.19	133.38	-	136.26	137.81	140.99	-	142.93	144.48	147.66	-	148.57	150.12	153.30	-	154.10	155.65	158.84	-	161.04	162.58	165.77	-
		Pr Dis	273.67	274.84	276.74	-	316.21	317.38	319.28	-	360.78	361.95	363.85	-	408.77	409.94	411.84	-	460.51	461.68	463.58	-	515.73	516.90	518.80	-
			4,274	4,270	4,261	-	4,802	4,798	4,789	-	5,392	5,388	5,379	-	6,031	6,027	6,018	-	6,744	6,740	6,731	-	7,581	7,577	7,568	-
75	1800	Capacity	72,958	73,993	76,181	79,524	72,303	73,337	75,526	78,868	70,390	71,424	73,613	76,955	67,099	68,134	70,322	73,664	63,077	64,112	66,300	69,642	59,405	60,440	62,628	65,971
		S/T	0.69	0.61	0.48	0.34	0.69	0.62	0.49	0.35	1.00	0.64	0.51	0.37	1.00	0.66	0.53	0.39	1.00	0.68	0.55	0.41	1.00	1.00	0.60	0.46
		Evap dT	23.92	22.12	18.76	15.28	23.88	22.08	18.71	15.23	24.13	22.33	18.97	15.48	23.86	22.06	18.70	15.21	23.62	21.82	18.45	14.97	24.74	22.94	19.58	16.10
		Pr Suc	124.51	126.06	129.24	134.58	132.13	133.67	136.86	142.19	138.80	140.34	143.53	148.86	144.44	145.98	149.17	154.50	149.97	151.52	154.71	160.04	156.90	158.45	161.64	166.97
		Pr Dis	268.87	270.04	271.93	276.63	311.41	312.58	314.47	319.17	355.98	357.15	359.04	363.74	403.97	405.14	407.03	411.73	455.71	456.88	458.77	463.47	510.92	512.09	513.99	518.69
		TotalPower	4,211	4,207	4,198	4,239	4,740	4,736	4,727	4,767	5,330	5,326	5,317	5,357	5,969	5,964	5,955	5,996	6,682	6,678	6,669	6,709	7,519	7,515	7,506	7,546
	2180	Capacity	74,257	75,291	77,480	80,822	73,601	74,636	76,824	80,166	71,688	72,723	74,911	78,254	68,397	**69,432**	71,620	74,963	64,375	65,410	67,598	70,941	60,704	61,738	63,926	67,269
		S/T	0.78	0.70	0.57	0.43	1.00	0.71	0.58	0.44	1.00	0.73	0.60	0.46	1.00	**0.75**	0.62	0.48	1.00	0.77	0.64	0.50	1.00	1.00	0.69	0.55
		Evap dT	22.34	20.54	17.18	13.69	22.29	20.49	17.13	13.64	22.54	20.74	17.38	13.90	22.27	**20.47**	17.11	13.63	22.03	20.23	16.87	13.39	23.16	21.36	18.00	14.51
		Pr Suc	127.05	128.59	131.78	137.11	134.66	136.21	139.40	144.73	141.33	142.88	146.07	151.40	146.97	**148.52**	151.71	157.04	152.51	154.06	157.24	162.57	159.44	160.99	164.17	169.50
		Pr Dis	272.12	273.29	275.18	279.88	314.66	315.83	317.73	322.42	359.23	360.40	362.29	366.99	407.22	**408.39**	410.28	414.98	458.96	460.13	462.02	466.72	514.18	515.34	517.24	521.94
		TotalPower	4,251	4,247	4,238	4,279	4,780	4,776	4,767	4,807	5,370	5,366	5,357	5,397	6,009	**6,004**	5,995	6,036	6,722	6,718	6,709	6,749	7,559	7,555	7,546	7,586
	2400	Capacity	75,173	76,207	78,396	81,738	74,517	75,552	77,740	81,082	72,604	73,639	75,827	79,170	69,313	70,348	72,536	75,879	65,291	66,326	68,514	71,857	61,620	62,654	64,843	68,185
		S/T	0.80	0.73	0.60	0.46	1.00	0.74	0.60	0.46	1.00	0.76	0.63	0.49	1.00	0.78	0.65	0.51	1.00	1.00	0.67	0.53	1.00	1.00	0.72	0.58
		Evap dT	21.59	19.79	16.43	12.94	21.54	19.74	16.38	12.90	21.79	19.99	16.63	13.15	21.52	19.72	16.36	12.88	21.28	19.48	16.12	12.64	22.41	20.61	17.25	13.76
		Pr Suc	128.67	130.22	133.41	138.74	136.29	137.84	141.02	146.35	142.96	144.51	147.69	153.03	148.60	150.15	153.33	158.66	154.13	155.68	158.87	164.20	161.06	162.61	165.80	171.13
		Pr Dis	273.91	275.08	276.98	281.68	316.45	317.62	319.52	324.22	361.02	362.19	364.09	368.78	409.01	410.18	412.08	416.77	460.75	461.92	463.82	468.52	515.97	517.14	519.03	523.73
			4,270	4,266	4,257	4,298	4,799	4,795	4,786	4,826	5,389	5,385	5,376	5,416	6,027	6,023	6,014	6,055	6,741	6,737	6,728	6,768	7,578	7,574	7,564	7,605

IDB: Entering Indoor Dry Bulb Temperature Shaded area reflects ACCA (TVA) conditions **kW = Total system power**

High and low pressures are measured at the liquid and suction access fittings. **Amps: Unit amps (comp.+ evaporator + condenser fan motors)**

Design Subcooling, 16 - 19 °F @ the liquid access fitting connection ARI 95 test conditions. Design Superheat 8 - 12°F @ the compressor suction access fitting connection.

			Outdoor Ambient Temperature																							
			65				75				85				95				105				115			
			Entering Indoor Wet Bulb Temperature																							
IDB	Airflow	ID WB	59	63	67	71	59	63	67	71	59	63	67	71	59	63	67	71	59	63	67	71	59	63	67	71
80	1600	Capacity	73,338	74,372	76,561	79,903	72,682	73,717	75,905	79,248	70,769	71,804	73,992	77,335	67,478	68,513	70,701	74,044	63,456	64,491	66,679	70,022	59,785	60,819	63,008	66,350
		S/T	1.00	0.73	0.60	0.46	1.00	0.74	0.61	0.47	1.00	0.76	0.63	0.49	1.00	1.00	0.65	0.51	1.00	1.00	0.67	0.53	1.00	1.00	0.72	0.58
		Evap dT	27.91	26.11	22.75	19.27	27.86	26.06	22.70	19.22	28.11	26.31	22.95	19.47	27.84	26.04	22.68	19.20	27.60	25.80	22.44	18.96	28.73	26.93	23.57	20.08
		Pr Suc	125.06	126.61	129.80	135.13	132.68	134.23	137.41	142.74	139.35	140.90	144.08	149.42	144.99	146.54	149.72	155.05	150.52	152.07	155.26	160.59	157.45	159.00	162.19	167.52
		Pr Dis	269.36	270.53	272.43	277.13	311.91	313.08	314.97	319.67	356.47	357.64	359.54	364.24	404.46	405.63	407.53	412.23	456.20	457.37	459.27	463.97	511.42	512.59	514.49	519.19
		TotalPower	4,214	4,210	4,201	4,241	4,743	4,739	4,730	4,770	5,333	5,329	5,320	5,360	5,971	5,967	5,958	5,999	6,685	6,681	6,671	6,712	7,522	7,517	7,508	7,549
	1880	Capacity	74,636	75,671	77,859	81,202	73,980	75,015	77,203	80,546	72,068	73,102	75,291	78,633	68,777	69,811	**72,000**	75,342	64,755	65,789	67,978	71,320	61,083	62,118	64,306	67,648
		S/T	1.00	0.82	0.69	0.55	1.00	0.83	0.70	0.56	1.00	0.85	0.72	0.58	1.00	1.00	**0.74**	0.60	1.00	1.00	0.76	0.62	1.00	1.00	0.81	0.67
		Evap dT	26.32	24.52	21.16	17.68	26.27	24.47	21.11	17.63	26.53	24.73	21.37	17.88	26.26	24.46	**21.09**	17.61	26.02	24.22	20.85	17.37	27.14	25.34	21.98	18.50
		Pr Suc	127.60	129.15	132.33	137.67	135.22	136.76	139.95	145.28	141.89	143.43	146.62	151.95	147.53	149.07	**152.26**	157.59	153.06	154.61	157.80	163.13	159.99	161.54	164.73	170.06
		Pr Dis	272.62	273.78	275.68	280.38	315.16	316.33	318.22	322.92	359.72	360.89	362.79	367.49	407.71	408.88	**410.78**	415.48	459.45	460.62	462.52	467.22	514.67	515.84	517.74	522.44
		TotalPower	4,254	4,250	4,241	4,281	4,783	4,779	4,770	4,810	5,373	5,369	5,360	5,400	6,011	6,007	**5,998**	6,039	6,725	6,721	6,711	6,752	7,562	7,557	7,548	7,589
	2200	Capacity	75,552	76,587	78,775	82,118	74,897	75,931	78,119	81,462	72,984	74,018	76,207	79,549	69,693	70,727	72,916	76,258	65,671	66,705	68,894	72,236	61,999	63,034	65,222	68,565
		S/T	1.00	0.85	0.72	0.58	1.00	0.86	0.73	0.59	1.00	0.88	0.75	0.61	1.00	1.00	0.77	0.63	1.00	1.00	0.79	0.65	1.00	1.00	0.84	0.70
		Evap dT	25.57	23.77	20.41	16.93	25.53	23.73	20.36	16.88	25.78	23.98	20.62	17.13	25.51	23.71	20.35	16.86	25.27	23.47	20.10	16.62	26.39	24.59	21.23	17.75
		Pr Suc	129.23	130.77	133.96	139.29	136.84	138.39	141.58	146.91	143.51	145.06	148.25	153.58	149.15	150.70	153.89	159.22	154.69	156.23	159.42	164.75	161.62	163.16	166.35	171.68
		Pr Dis	274.41	275.58	277.47	282.17	316.95	318.12	320.01	324.71	361.52	362.69	364.58	369.28	409.51	410.68	412.57	417.27	461.25	462.42	464.31	469.01	516.46	517.63	519.53	524.23
			4,273	4,269	4,260	4,300	4,802	4,797	4,788	4,829	5,392	5,387	5,378	5,419	6,030	6,026	6,017	6,057	6,743	6,739	6,730	6,771	7,580	7,576	7,567	7,608
85	1600	Capacity	74,572	75,607	77,795	81,137	73,916	74,951	77,139	80,482	72,004	73,038	75,226	78,569	68,713	69,747	71,936	75,278	64,691	65,725	67,914	71,256	61,019	62,054	64,242	67,584
		S/T	1.00	0.83	0.70	0.56	1.00	1.00	0.71	0.57	1.00	1.00	0.73	0.59	1.00	1.00	0.75	0.61	1.00	1.00	0.77	0.63	1.00	1.00	1.00	0.68
		Evap dT	31.44	29.64	26.28	22.80	31.40	29.60	26.23	22.75	31.65	29.85	26.49	23.00	31.38	29.58	26.22	22.73	31.14	29.34	25.97	22.49	32.26	30.46	27.10	23.62
		Pr Suc	126.94	128.49	131.67	137.01	134.56	136.10	139.29	144.62	141.23	142.77	145.96	151.29	146.87	148.41	151.60	156.93	152.40	153.95	157.14	162.47	159.33	160.88	164.07	169.40
		Pr Dis	270.63	271.80	273.70	278.40	313.17	314.34	316.24	320.94	357.74	358.91	360.81	365.51	405.73	406.90	408.80	413.50	457.47	458.64	460.54	465.24	512.69	513.86	515.75	520.45
		TotalPower	4,224	4,220	4,211	4,252	4,753	4,749	4,740	4,780	5,343	5,339	5,330	5,370	5,981	5,977	5,968	6,009	6,695	6,691	6,682	6,722	7,532	7,528	7,519	7,559
	1880	Capacity	75,870	76,905	79,093	82,436	75,215	76,249	78,438	81,780	73,302	74,337	76,525	79,867	70,011	71,046	73,234	76,576	65,989	67,024	69,212	72,554	62,317	63,352	65,540	68,883
		S/T	1.00	0.92	0.79	0.65	1.00	1.00	0.80	0.66	1.00	1.00	0.82	0.68	1.00	1.00	0.84	0.70	1.00	1.00	1.00	0.72	1.000	1.000	1.000	0.772
		Evap dT	29.86	28.06	24.70	21.21	29.81	28.01	24.65	21.16	30.06	28.26	24.90	21.42	29.79	27.99	24.63	21.15	29.55	27.75	24.39	20.91	30.68	28.88	25.52	22.03
		Pr Suc	129.48	131.02	134.21	139.54	137.09	138.64	141.83	147.16	143.76	145.31	148.50	153.83	149.40	150.95	154.14	159.47	154.94	156.48	159.67	165.00	161.87	163.42	166.60	171.93
		Pr Dis	273.88	275.05	276.95	281.65	316.42	317.59	319.49	324.19	360.99	362.16	364.06	368.76	408.98	410.15	412.05	416.75	460.72	461.89	463.79	468.49	515.94	517.11	519.00	523.70
		TotalPower	4,264	4,260	4,251	4,292	4,793	4,789	4,780	4,820	5,383	5,379	5,370	5,410	6,021	6,017	6,008	6,049	6,735	6,731	6,722	6,762	7,572	7,568	7,559	7,599
	2200	Capacity	76,787	77,821	80,009	83,352	76,131	77,165	79,354	82,696	74,218	75,253	77,441	80,783	70,927	71,962	74,150	77,492	66,905	67,940	70,128	73,470	63,233	64,268	66,456	69,799
		S/T	1.00	0.95	0.82	0.68	1.00	1.00	0.83	0.69	1.00	1.00	0.85	0.71	1.00	1.00	0.87	0.73	1.00	1.00	1.00	0.75	1.00	1.00	1.00	0.80
		Evap dT	29.11	27.31	23.95	20.46	29.06	27.26	23.90	20.42	29.31	27.51	24.15	20.67	29.04	27.24	23.88	20.40	28.80	27.00	23.64	20.16	29.93	28.13	24.77	21.28
		Pr Suc	131.10	132.65	135.84	141.17	138.72	140.27	143.45	148.78	145.39	146.94	150.12	155.46	151.03	152.58	155.76	161.09	156.56	158.11	161.30	166.63	163.49	165.04	168.23	173.56
		Pr Dis	275.68	276.85	278.74	283.44	318.22	319.39	321.28	325.98	362.78	363.95	365.85	370.55	410.77	411.94	413.84	418.54	462.52	463.69	465.58	470.28	517.73	518.90	520.80	525.50
			4,283	4,279	4,270	4,310	4,812	4,808	4,799	4,839	5,402	5,398	5,389	5,429	6,040	6,036	6,027	6,067	6,754	6,749	6,740	6,781	7,591	7,586	7,577	7,618

IDB: Entering Indoor Dry Bulb Temperature — Shaded area reflects AHRI (TVA) conditions — **kW = Total system power**

High and low pressures are measured at the liquid and suction access fittings. — **Amps: Unit amps (comp.+ evaporator + condenser fan motors)**

Design Subcooling, 16 - 19 °F @ the liquid access fitting connection ARI 95 test conditions. Design Superheat 8 - 12°F @ the compressor suction access fitting connection.

Electrical Heater Data

AIR FLOW FOR ELECTRIC HEAT

UNIT	HEATER KIT MODEL NUMBER	KW	MINIMUM CFM	MAXIMUM CFM
3 ton AC STD Static	EH*D-*S05	5	975	1500
	EH*D-*S10	10		
	EH*D-*S16	15		
3 ton AC High-Static	EH*D-*S05	5	975	
	EH*D-*S10	10		
	EH*D-*S15	15		
4 ton AC STD Static	EH*D-*S05	5	1300	2000
	EH*D-*S10	10		
	EH*D-*S15	15		
	EH*D-*S22	20		
4 ton AC High-Static	EH*D-*S05	5	1300	
	EH*D-*S10	10		
	EH*D-*S15	15		
	EH*D-*S21	20		
5 ton AC STD Static	EH*D-*S05	5	1625	2500
	EH*D-*S10	10		
	EH*D-*S15	15		
	EH*D-*S22	20		
5 ton AC High-Static	EH*D-*S05	5		
	EH*D-*S10	10		
	EH*D-*S15	15		
	EH*D-*S20	20		
6 ton AC STD Static	EH*D-*S05	5	1950	3000w
	EH*D-*S10	10		
	EH*D-*S15	15		
	EH*D-*S21	20		
	EH*D-*S31	30		
6 ton AC High-Static	EH*D-*S05	5		
	EH*D-*S10	10		
	EH*D-*S15	15		
	EH*D-*S20	20		
	EH*D-*S30	30		

HEATER KIT MODEL NUMBER NOMENCLATURE

E	H	*	B	-	*	S	15
1	2	3	4	-	5	6	7,8

Electric

Heater

Heater Type
- **X** Staged
- **S** SCR (modulating)

Drive Type
- **B** Belt-Drive Unit
- **D** Direct-Drive Unit

Voltage
- **1** 208-230/1/60 — Single phase 60 Hz
- **3** 208-230/3/60 — Three phase 60 Hz
- **4** 460/3/60 — Three phase 60 Hz
- **7** 575/3/60 — Three phase 60 Hz

Chassis
- **S** Small
- **M** Medium
- **L** Large

Kilowatt

3 Ton Cooler • Standard Static Drive • Model: DRC0361D and DRC0363D

Down Flow				
SPEED TAP	EXTERNAL STATIC PRESSURE (ESP) IN W. C.	STANDARD CFM	RPM	BHP
T1	0.2	1080	570	0.15
	0.4	1080	620	0.16
	0.6	990	695	0.18
	0.8	890	760	0.20
	1.0	740	835	0.21
T2	0.2	1315	605	0.22
	0.4	1220	660	0.24
	0.6	1125	730	0.26
	0.8	1010	800	0.29
	1.0	945	845	0.30
T3	0.2	1315	605	0.22
	0.4	1220	660	0.24
	0.6	1125	730	0.26
	0.8	1010	800	0.29
	1.0	945	845	0.30
T4	0.2	1315	605	0.22
	0.4	1220	660	0.24
	0.6	1125	730	0.26
	0.8	1010	800	0.29
	1.0	945	845	0.30
T5	0.2	1485	695	0.30
	0.4	1380	755	0.32
	0.6	1290	815	0.35
	0.8	1195	875	0.37
	1.0	1080	940	0.40

Horizontal Flow				
SPEED TAP	EXTERNAL STATIC PRESSURE (ESP) IN W. C.	STANDARD CFM	RPM	BHP
T1	0.2	1100	560	0.14
	0.4	1100	610	0.16
	0.6	1010	680	0.17
	0.8	910	745	0.19
	1.0	755	820	0.21
T2	0.2	1340	595	0.21
	0.4	1245	645	0.23
	0.6	1150	715	0.26
	0.8	1030	785	0.28
	1.0	965	830	0.30
T3	0.2	1340	595	0.21
	0.4	1245	645	0.23
	0.6	1150	715	0.26
	0.8	1030	785	0.28
	1.0	965	830	0.30
T4	0.2	1340	595	0.21
	0.4	1245	645	0.23
	0.6	1150	715	0.26
	0.8	1030	785	0.28
	1.0	965	830	0.30
T5	0.2	1515	680	0.29
	0.4	1410	740	0.32
	0.6	1315	800	0.34
	0.8	1220	860	0.37
	1.0	1100	920	0.39

Shaded area indicates air flow below 900 SCFM (300 SCFM/ton) that is not recommended for High Stage cooling or heating

3 Ton Cooler • Standard Static Drive • Models: DRC0364D and DRC0367D

Down Flow				
SPEED TAP	EXTERNAL STATIC PRESSURE (ESP) IN W. C.	STANDARD CFM	RPM	BHP
T1	0.2	1105	580	0.15
	0.4	935	680	0.17
	0.6	770	765	0.20
	0.8	615	820	0.21
	1.0	-	-	-
T2	0.2	1490	685	0.28
	0.4	1370	755	0.31
	0.6	1230	840	0.34
	0.8	1075	915	0.37
	1.0	950	965	0.39
T3	0.2	1370	650	0.23
	0.4	1250	735	0.26
	0.6	1100	820	0.29
	0.8	945	890	0.32
	1.0	815	935	0.33
T4	0.2	1490	685	0.28
	0.4	1370	755	0.31
	0.6	1230	840	0.34
	0.8	1075	915	0.37
	1.0	950	965	0.39
T5	0.2	1620	725	0.34
	0.4	1495	780	0.36
	0.6	1370	860	0.40
	0.8	1215	935	0.43
	1.0	1100	1005	0.47

Horizontal Flow				
SPEED TAP	EXTERNAL STATIC PRESSURE (ESP) IN W. C.	STANDARD CFM	RPM	BHP
T1	0.2	1115	575	0.15
	0.4	945	675	0.17
	0.6	780	755	0.19
	0.8	620	810	0.21
	1.0	-	-	-
T2	0.2	1505	680	0.28
	0.4	1385	745	0.30
	0.6	1240	830	0.34
	0.8	1085	905	0.37
	1.0	960	955	0.39
T3	0.2	1385	645	0.23
	0.4	1265	730	0.26
	0.6	1110	810	0.29
	0.8	955	880	0.31
	1.0	825	925	0.33
T4	0.2	1505	680	0.28
	0.4	1385	745	0.30
	0.6	1240	830	0.34
	0.8	1085	905	0.37
	1.0	960	955	0.39
T5	0.2	1635	720	0.33
	0.4	1510	770	0.36
	0.6	1385	850	0.39
	0.8	1225	925	0.43
	1.0	1110	995	0.46

Shaded area indicates air flow below 900 SCFM (300 SCFM/ton) that is not recommended for High Stage cooling or heating

4 Ton Cooler • Standard Static Drive • Model: DRC0481D and DRC048D

Down Flow				
SPEED TAP	EXTERNAL STATIC PRESSURE (ESP) IN W. C.	STANDARD CFM	RPM	BHP
T1	0.2	1190	550	0.14
	0.4	1090	600	0.15
	0.6	970	690	0.18
	0.8	855	750	0.19
	1.0	-	-	-
T2	0.2	1675	765	0.39
	0.4	1615	790	0.40
	0.6	1555	835	0.42
	0.8	1490	885	0.45
	1.0	1425	940	0.47
T3	0.2	1645	750	0.36
	0.4	1580	775	0.38
	0.6	1515	825	0.40
	0.8	1450	875	0.42
	1.0	1380	935	0.45
T4	0.2	1745	795	0.44
	0.4	1695	820	0.45
	0.6	1640	850	0.47
	0.8	1585	905	0.50
	1.0	1530	945	0.52
T5	0.2	1770	805	0.46
	0.4	1725	835	0.48
	0.6	1670	860	0.49
	0.8	1620	910	0.52
	1.0	1565	945	0.54

Horizontal Flow				
SPEED TAP	EXTERNAL STATIC PRESSURE (ESP) IN W. C.	STANDARD CFM	RPM	BHP
T1	0.2	1215	540	0.14
	0.4	1110	590	0.15
	0.6	990	675	0.17
	0.8	870	735	0.19
	1.0	-	-	-
T2	0.2	1710	750	0.38
	0.4	1645	775	0.39
	0.6	1585	820	0.41
	0.8	1520	865	0.44
	1.0	1455	920	0.46
T3	0.2	1680	735	0.36
	0.4	1610	760	0.37
	0.6	1545	810	0.39
	0.8	1480	860	0.42
	1.0	1410	915	0.44
T4	0.2	1780	780	0.43
	0.4	1730	805	0.44
	0.6	1675	835	0.46
	0.8	1615	885	0.49
	1.0	1560	925	0.51
T5	0.2	1805	790	0.45
	0.4	1760	820	0.47
	0.6	1705	845	0.48
	0.8	1650	890	0.51
	1.0	1595	925	0.53

Shaded area indicates air flow below 1200 SCFM (300 SCFM/ton) that is not recommended for High Stage cooling or heating

4 Ton Cooler • Standard Static Drive • Models: DRC0484D and DRC0487D

Down Flow				
SPEED TAP	EXTERNAL STATIC PRESSURE (ESP) IN W. C.	STANDARD CFM	RPM	BHP
T1	0.2	1070	585	0.15
	0.4	905	685	0.18
	0.6	755	760	0.20
	0.8	575	850	0.22
	1.0	-	-	-
T2	0.2	1755	795	0.44
	0.4	1635	850	0.47
	0.6	1525	910	0.50
	0.8	1420	975	0.53
	1.0	1310	1035	0.57
T3	0.2	1625	755	0.37
	0.4	1500	810	0.39
	0.6	1385	880	0.43
	0.8	1270	945	0.46
	1.0	1155	1010	0.49
T4	0.2	1755	795	0.44
	0.4	1635	850	0.47
	0.6	1525	910	0.50
	0.8	1420	975	0.53
	1.0	1310	1035	0.57
T5	0.2	1865	830	0.50
	0.4	1750	880	0.53
	0.6	1645	940	0.57
	0.8	1540	995	0.60
	1.0	1440	1055	0.64

Horizontal Flow				
SPEED TAP	EXTERNAL STATIC PRESSURE (ESP) IN W. C.	STANDARD CFM	RPM	BHP
T1	0.2	1080	580	0.15
	0.4	915	680	0.17
	0.6	765	750	0.19
	0.8	580	840	0.22
	1.0	-	-	-
T2	0.2	1775	785	0.43
	0.4	1650	840	0.46
	0.6	1540	900	0.49
	0.8	1435	965	0.53
	1.0	1325	1025	0.56
T3	0.2	1640	745	0.36
	0.4	1515	800	0.39
	0.6	1400	870	0.42
	0.8	1285	935	0.45
	1.0	1165	1000	0.48
T4	0.2	1775	785	0.43
	0.4	1650	840	0.46
	0.6	1540	900	0.49
	0.8	1435	965	0.53
	1.0	1325	1025	0.56
T5	0.2	1885	820	0.50
	0.4	1770	870	0.53
	0.6	1660	930	0.56
	0.8	1555	985	0.60
	1.0	1455	1045	0.63

Shaded area indicates air flow below 1200 SCFM (300 SCFM/ton) that is not recommended for High Stage cooling or heating

5 Ton Cooler • Standard Static Drive • DRC0601D and DRC0603D

Down Flow				
SPEED TAP	EXTERNAL STATIC PRESSURE (ESP) IN W. C.	STANDARD CFM	RPM	BHP
T1	0.2	1275	635	0.21
	0.4	1160	715	0.24
	0.6	1025	790	0.26
	0.8	925	855	0.28
	1.0	-	-	-
T2	0.2	2110	910	0.74
	0.4	2030	955	0.77
	0.6	1960	1000	0.81
	0.8	1885	1050	0.85
	1.0	1845	1100	0.89
T3	0.2	1980	870	0.62
	0.4	1900	920	0.66
	0.6	1825	965	0.69
	0.8	1750	1015	0.73
	1.0	1700	1075	0.77
T4	0.2	2175	925	0.79
	0.4	2095	975	0.84
	0.6	2020	1020	0.87
	0.8	1950	1065	0.91
	1.0	1910	1115	0.96
T5	0.2	2285	955	0.91
	0.4	2200	1005	0.96
	0.6	2120	1050	1.00
	0.8	2050	1090	1.04
	1.0	2020	1135	1.08

Horizontal Flow				
SPEED TAP	EXTERNAL STATIC PRESSURE (ESP) IN W. C.	STANDARD CFM	RPM	BHP
T1	0.2	1300	620	0.20
	0.4	1185	700	0.23
	0.6	1045	775	0.26
	0.8	945	840	0.28
	1.0	-	-	-
T2	0.2	2150	890	0.72
	0.4	2070	935	0.76
	0.6	2000	980	0.79
	0.8	1925	1030	0.83
	1.0	1880	1080	0.87
T3	0.2	2020	855	0.61
	0.4	1940	900	0.64
	0.6	1860	945	0.68
	0.8	1785	995	0.71
	1.0	1735	1055	0.75
T4	0.2	2220	905	0.78
	0.4	2135	955	0.82
	0.6	2060	1000	0.86
	0.8	1990	1045	0.90
	1.0	1950	1095	0.94
T5	0.2	2330	935	0.89
	0.4	2245	985	0.94
	0.6	2160	1030	0.98
	0.8	2090	1070	1.02
	1.0	2060	1110	1.06

Shaded area indicates air flow below 1500 SCFM (300 SCFM/ton) that is not recommended for High Stage cooling or heating

5 Ton Cooler • Standard Static Drive • Models: DRC0604D and DRC0607D

Down Flow				
SPEED TAP	EXTERNAL STATIC PRESSURE (ESP) IN W. C.	STANDARD CFM	RPM	BHP
T1	0.2	1305	655	0.22
	0.4	1180	735	0.24
	0.6	1050	815	0.27
	0.8	910	895	0.30
	1.0	-	-	-
T2	0.2	1950	860	0.55
	0.4	1860	910	0.58
	0.6	1780	960	0.62
	0.8	1695	1015	0.65
	1.0	1580	1080	0.69
T3	0.2	2070	900	0.64
	0.4	1985	945	0.68
	0.6	1910	995	0.71
	0.8	1835	1040	0.74
	1.0	1730	1100	0.79
T4	0.2	2030	890	0.61
	0.4	1945	935	0.65
	0.6	1870	980	0.68
	0.8	1790	1030	0.71
	1.0	1680	1095	0.76
T5	0.2	2100	910	0.67
	0.4	2025	955	0.70
	0.6	1950	1000	0.74
	0.8	1875	1050	0.77
	1.0	1775	1110	0.82

Horizontal Flow				
SPEED TAP	EXTERNAL STATIC PRESSURE (ESP) IN W. C.	STANDARD CFM	RPM	BHP
T1	0.2	1320	650	0.21
	0.4	1190	730	0.24
	0.6	1060	805	0.27
	0.8	920	885	0.29
	1.0	-	-	-
T2	0.2	1970	850	0.55
	0.4	1880	900	0.58
	0.6	1800	950	0.61
	0.8	1710	1005	0.65
	1.0	1595	1070	0.69
T3	0.2	2090	890	0.64
	0.4	2005	935	0.67
	0.6	1930	985	0.70
	0.8	1855	1030	0.74
	1.0	1745	1090	0.78
T4	0.2	2050	880	0.61
	0.4	1965	925	0.64
	0.6	1890	970	0.67
	0.8	1810	1020	0.70
	1.0	1695	1085	0.75
T5	0.2	2120	900	0.66
	0.4	2045	945	0.70
	0.6	1970	990	0.73
	0.8	1895	1040	0.77
	1.0	1795	1100	0.81

Shaded area indicates air flow below 1500 SCFM (300 SCFM/ton) that is not recommended for High Stage cooling or heating

6 Ton Cooler • Standard Static Drive • Models: DRC0723D, DRC0724D and DRC0727D

Down Flow				
SPEED TAP	EXTERNAL STATIC PRESSURE (ESP) IN W. C.	STANDARD CFM	RPM	BHP
T1	0.2	1394	635	0.21
	0.4	1265	711	0.24
	0.6	1127	805	0.27
	0.8	983	885	0.29
	1.0	855	952	0.32
T2	0.2	2226	892	0.69
	0.4	2143	931	0.72
	0.6	2052	973	0.75
	0.8	1950	1027	0.79
	1.0	1861	1080	0.84
T3	0.2	2226	892	0.69
	0.4	2143	931	0.72
	0.6	2052	973	0.75
	0.8	1950	1027	0.79
	1.0	1861	1080	0.84
T4	0.2	2301	903	0.84
	0.4	2229	935	0.87
	0.6	2156	987	0.92
	0.8	2083	1034	0.96
	1.0	2011	1080	1.00
T5	0.2	2435	972	0.93
	0.4	2362	1007	0.96
	0.6	2293	1043	0.99
	0.8	2209	1086	1.03
	1.0	2124	1134	1.08

Horizontal Flow				
SPEED TAP	EXTERNAL STATIC PRESSURE (ESP) IN W. C.	STANDARD CFM	RPM	BHP
T1	0.2	1382	642	0.21
	0.4	1259	724	0.24
	0.6	1160	799	0.27
	0.8	1016	879	0.29
	1.0	899	948	0.32
T2	0.2	2211	885	0.68
	0.4	2128	938	0.73
	0.6	2034	988	0.76
	0.8	1950	1042	0.81
	1.0	1859	1098	0.85
T3	0.2	2211	885	0.68
	0.4	2128	938	0.73
	0.6	2034	988	0.76
	0.8	1950	1042	0.81
	1.0	1859	1098	0.85
T4	0.2	2348	926	0.86
	0.4	2274	973	0.90
	0.6	2200	1020	0.95
	0.8	2126	1066	0.99
	1.0	2052	1113	1.03
T5	0.2	2404	961	0.91
	0.4	2347	995	0.95
	0.6	2273	1050	1.00
	0.8	2193	1100	1.05
	1.0	2111	1149	1.09

Shaded area indicates air flow below 1800 SCFM (300 SCFM/ton) that is not recommended for High Stage cooling or heating

3 Ton Cooler • High-Static Drive • Models: DRC0363W, DRC0364W, DRC0367W

Down Flow

SPEED TAP	EXTERNAL STATIC PRESSURE (ESP) IN W. C.	STANDARD CFM	RPM	BHP
T1 C	0.2	961	540	0.11
	0.4	751	654	0.13
	0.6	589	740	0.15
	0.8	404	813	0.16
	1.0	-	-	-
	1.2	-	-	-
	1.4	-	-	-
	1.6	-	-	-
	1.8	-	-	-
	2.0	-	-	-
T2 C	0.2	1237	614	0.18
	0.4	1095	704	0.21
	0.6	924	794	0.24
	0.8	792	863	0.26
	1.0	640	937	0.28
	1.2	485	990	0.29
	1.4	-	-	-
	1.6	-	-	-
	1.8	-	-	-
	2.0	-	-	-
T3 C	0.2	-	-	-
	0.4	-	-	-
	0.6	-	-	-
	0.8	-	-	-
	1.0	-	-	-
	1.2	1259	1109	0.63
	1.4	1155	1160	0.66
	1.6	1060	1205	0.69
	1.8	947	1260	0.72
	2.0	830	1312	0.75
T4 C	0.2	-	-	-
	0.4	-	-	-
	0.6	-	-	-
	0.8	-	-	-
	1.0	-	-	-
	1.2	1524	1059	0.67
	1.4	1273	1179	0.74
	1.6	1179	1227	0.77
	1.8	1081	1273	0.80
	2.0	964	1327	0.84
T5 C	0.2	-	-	-
	0.4	-	-	-
	0.6	-	-	-
	0.8	-	-	-
	1.0	-	-	-
	1.2	-	-	-
	1.4	-	-	-
	1.6	1393	1269	0.94
	1.8	1307	1312	0.97
	2.0	1218	1354	1.00

SPEED TAP	EXTERNAL STATIC PRESSURE (ESP) IN W. C.	STANDARD CFM	RPM	BHP
T1 H	0.2	-	-	-
	0.4	-	-	-
	0.6	-	-	-
	0.8	1398	959	0.50
	1.0	1246	1037	0.54
	1.2	1140	1090	0.57
	1.4	1040	1136	0.59
	1.6	918	1196	0.63
	1.8	799	1252	0.66
	2.0	-	-	-
T2 H	0.2	-	-	-
	0.4	-	-	-
	0.6	-	-	-
	0.8	-	-	-
	1.0	-	-	-
	1.2	1259	1109	0.63
	1.4	1155	1160	0.66
	1.6	1060	1205	0.69
	1.8	947	1260	0.72
	2.0	830	1312	0.75
T3 H	0.2	-	-	-
	0.4	-	-	-
	0.6	-	-	-
	0.8	-	-	-
	1.0	-	-	-
	1.2	1524	1059	0.67
	1.4	1273	1179	0.74
	1.6	1179	1227	0.77
	1.8	1081	1273	0.80
	2.0	964	1327	0.84
T4 H	0.2	-	-	-
	0.4	-	-	-
	0.6	-	-	-
	0.8	-	-	-
	1.0	-	-	-
	1.2	-	-	-
	1.4	-	-	-
	1.6	1284	1249	0.86
	1.8	1197	1294	0.89
	2.0	1095	1337	0.92
T5 H	0.2	-	-	-
	0.4	-	-	-
	0.6	-	-	-
	0.8	-	-	-
	1.0	-	-	-
	1.2	-	-	-
	1.4	-	-	-
	1.6	1393	1269	0.94
	1.8	1307	1312	0.97
	2.0	1218	1354	1.00

Shaded area indicates air flow below 900 SCFM (300 SCFM/ton) that is not recommended for High Stage cooling or heating

3 Ton Cooler • High-Static Drive • Models: DRC0363W, DRC0364W, DRC0367W

Horizontal Flow									
SPEED TAP	EXTERNAL STATIC PRESSURE (ESP) IN W. C.	STANDARD CFM	RPM	BHP	SPEED TAP	EXTERNAL STATIC PRESSURE (ESP) IN W. C.	STANDARD CFM	RPM	BHP
T1 C	0.2	940	533	0.11	T1 H	0.2	-	-	-
	0.4	729	642	0.13		0.4	-	-	-
	0.6	562	735	0.15		0.6	-	-	-
	0.8	-	-	-		0.8	1362	958	0.50
	1.0	-	-	-		1.0	1238	1016	0.53
	1.2	-	-	-		1.2	1115	1072	0.56
	1.4	-	-	-		1.4	1014	1128	0.59
	1.6	-	-	-		1.6	925	1184	0.62
	1.8	-	-	-		1.8	791	1229	0.64
	2.0	-	-	-		2.0	-	-	-
T2 C	0.2	1216	609	0.18	T2 H	0.2	-	-	-
	0.4	1065	708	0.21		0.4	-	-	-
	0.6	906	784	0.23		0.6	-	-	-
	0.8	766	854	0.25		0.8	1482	973	0.56
	1.0	629	923	0.27		1.0	1351	1039	0.59
	1.2	460	977	0.29		1.2	1239	1089	0.62
	1.4	-	-	-		1.4	1136	1139	0.65
	1.6	-	-	-		1.6	1041	1193	0.68
	1.8	-	-	-		1.8	949	1249	0.71
	2.0	-	-	-		2.0	843	1289	0.74
T3 C	0.2	-	-	-	T3 H	0.2	-	-	-
	0.4	-	-	-		0.4	-	-	-
	0.6	-	-	-		0.6	-	-	-
	0.8	1482	973	0.56		0.8	-	-	-
	1.0	1351	1039	0.59		1.0	1463	1060	0.67
	1.2	1239	1089	0.62		1.2	1349	1109	0.70
	1.4	1136	1139	0.65		1.4	1251	1160	0.73
	1.6	1041	1193	0.68		1.6	1145	1209	0.76
	1.8	949	1249	0.71		1.8	1062	1259	0.79
	2.0	843	1289	0.74		2.0	970	1310	0.83
T4 C	0.2	-	-	-	T4 H	0.2	-	-	-
	0.4	-	-	-		0.4	-	-	-
	0.6	-	-	-		0.6	-	-	-
	0.8	-	-	-		0.8	-	-	-
	1.0	1463	1060	0.67		1.0	-	-	-
	1.2	1349	1109	0.70		1.2	1461	1133	0.78
	1.4	1251	1160	0.73		1.4	1359	1180	0.81
	1.6	1145	1209	0.76		1.6	1259	1228	0.85
	1.8	1062	1259	0.79		1.8	1162	1278	0.88
	2.0	970	1310	0.83		2.0	1082	1325	0.91
T5 C	0.2	-	-	-	T5 H	0.2	-	-	-
	0.4	-	-	-		0.4	-	-	-
	0.6	-	-	-		0.6	-	-	-
	0.8	-	-	-		0.8	-	-	-
	1.0	-	-	-		1.0	-	-	-
	1.2	-	-	-		1.2	-	-	-
	1.4	1453	1195	0.88		1.4	1453	1195	0.88
	1.6	1358	1241	0.92		1.6	1358	1241	0.92
	1.8	1262	1286	0.95		1.8	1262	1286	0.95
	2.0	1193	1339	0.99		2.0	1193	1339	0.99

Shaded area indicates air flow below 900 SCFM (300 SCFM/ton) that is not recommended for High Stage cooling or heating

4 Ton Cooler • High-Static Drive • Models: DRC0483W, DRC0484W, DRC0487W

Down Flow

SPEED TAP	EXTERNAL STATIC PRESSURE (ESP) IN W. C.	STANDARD CFM	RPM	BHP
T1 C	0.2	949	553	0.12
	0.4	773	658	0.14
	0.6	609	738	0.16
	0.8	414	822	0.18
	1.0	-	-	-
	1.2	-	-	-
	1.4	-	-	-
	1.6	-	-	-
	1.8	-	-	-
	2.0	-	-	-
T2 C	0.2	1512	715	0.31
	0.4	1380	783	0.34
	0.6	1260	855	0.37
	0.8	1139	923	0.40
	1.0	1009	988	0.42
	1.2	893	1045	0.45
	1.4	753	1113	0.48
	1.6	511	1207	0.52
	1.8	629	1159	0.50
	2.0	-	-	-
T3 C	0.2	-	-	-
	0.4	1988	955	0.72
	0.6	1891	1003	0.75
	0.8	1791	1054	0.79
	1.0	1691	1110	0.83
	1.2	1606	1159	0.87
	1.4	1513	1211	0.91
	1.6	1389	1269	0.95
	1.8	1283	1314	0.98
	2.0	1191	1357	1.02
T4 C	0.2	-	-	-
	0.4	-	-	-
	0.6	-	-	-
	0.8	-	-	-
	1.0	1914	1162	1.02
	1.2	1827	1211	1.07
	1.4	1747	1254	1.10
	1.6	1655	1304	1.15
	1.8	1542	1356	1.19
	2.0	1444	1398	1.23
T5 C	0.2	-	-	-
	0.4	-	-	-
	0.6	-	-	-
	0.8	-	-	-
	1.0	-	-	-
	1.2	1932	1233	1.17
	1.4	1849	1276	1.22
	1.6	1770	1321	1.26
	1.8	1672	1373	1.31
	2.0	1541	1418	1.35

SPEED TAP	EXTERNAL STATIC PRESSURE (ESP) IN W. C.	STANDARD CFM	RPM	BHP
T1 H	0.2	1991	870	0.59
	0.4	1878	923	0.63
	0.6	1777	974	0.66
	0.8	1675	1029	0.70
	1.0	1580	1083	0.73
	1.2	1484	1136	0.77
	1.4	1365	1194	0.81
	1.6	1258	1243	0.84
	1.8	1161	1288	0.87
	2.0	1045	1341	0.91
T2 H	0.2	-	-	-
	0.4	1988	955	0.72
	0.6	1891	1003	0.75
	0.8	1791	1054	0.79
	1.0	1691	1110	0.83
	1.2	1606	1159	0.87
	1.4	1513	1211	0.91
	1.6	1389	1269	0.95
	1.8	1283	1314	0.98
	2.0	1191	1357	1.02
T3 H	0.2	-	-	-
	0.4	-	-	-
	0.6	1999	1036	0.85
	0.8	1900	1085	0.89
	1.0	1802	1140	0.94
	1.2	1714	1191	0.98
	1.4	1623	1237	1.02
	1.6	1519	1292	1.06
	1.8	1407	1340	1.10
	2.0	1313	1385	1.14
T4 H	0.2	-	-	-
	0.4	-	-	-
	0.6	-	-	-
	0.8	-	-	-
	1.0	1914	1162	1.02
	1.2	1827	1211	1.07
	1.4	1747	1254	1.10
	1.6	1655	1304	1.15
	1.8	1542	1356	1.19
	2.0	1444	1398	1.23
T5 H	0.2	-	-	-
	0.4	-	-	-
	0.6	-	-	-
	0.8	-	-	-
	1.0	-	-	-
	1.2	1932	1233	1.17
	1.4	1849	1276	1.22
	1.6	1770	1321	1.26
	1.8	1672	1373	1.31
	2.0	1541	1418	1.35

Shaded area indicates air flow below 1200 SCFM (300 SCFM/ton) that is not recommended for High Stage cooling or heating

4 Ton Cooler • High-Static Drive • Models: DRC0483W, DRC0484W, DRC0487W

Horizontal Flow									
SPEED TAP	EXTERNAL STATIC PRESSURE (ESP) IN W. C.	STANDARD CFM	RPM	BHP	SPEED TAP	EXTERNAL STATIC PRESSURE (ESP) IN W. C.	STANDARD CFM	RPM	BHP
T1 C	0.2	991	541	0.12	T1 H	0.2	-	-	-
	0.4	806	646	0.14		0.4	1928	895	0.61
	0.6	652	737	0.16		0.6	1853	938	0.64
	0.8	473	826	0.18		0.8	1758	989	0.67
	1.0	-	-	-		1.0	1676	1038	0.70
	1.2	-	-	-		1.2	1576	1100	0.75
	1.4	-	-	-		1.4	1452	1165	0.79
	1.6	-	-	-		1.6	1337	1220	0.83
	1.8	-	-	-		1.8	1250	1268	0.86
	2.0	-	-	-		2.0	1165	1314	0.89
T2 C	0.2	1547	698	0.30	T2 H	0.2	-	-	-
	0.4	1451	754	0.32		0.4	-	-	-
	0.6	1343	817	0.35		0.6	1965	970	0.73
	0.8	1203	903	0.39		0.8	1885	1014	0.76
	1.0	1076	972	0.42		1.0	1797	1063	0.80
	1.2	964	1032	0.44		1.2	1707	1114	0.84
	1.4	808	1115	0.48		1.4	1600	1180	0.88
	1.6	696	1164	0.50		1.6	1483	1239	0.93
	1.8	907	1206	0.52		1.8	1383	1291	0.97
	2.0	460	1247	0.53		2.0	1293	1330	1.00
T3 C	0.2	-	-	-	T3 H	0.2	-	-	-
	0.4	-	-	-		0.4	-	-	-
	0.6	1965	970	0.73		0.6	-	-	-
	0.8	1885	1014	0.76		0.8	1999	1041	0.86
	1.0	1797	1063	0.80		1.0	1912	1090	0.90
	1.2	1707	1114	0.84		1.2	1834	1133	0.93
	1.4	1600	1180	0.88		1.4	1736	1190	0.98
	1.6	1483	1239	0.93		1.6	1634	1251	1.03
	1.8	1383	1291	0.97		1.8	1516	1304	1.07
	2.0	1293	1330	1.00		2.0	1419	1350	1.11
T4 C	0.2	-	-	-	T4 H	0.2	-	-	-
	0.4	-	-	-		0.4	-	-	-
	0.6	-	-	-		0.6	-	-	-
	0.8	-	-	-		0.8	-	-	-
	1.0	-	-	-		1.0	-	-	-
	1.2	1944	1154	1.02		1.2	1944	1154	1.02
	1.4	1863	1205	1.06		1.4	1863	1205	1.06
	1.6	1765	1265	1.11		1.6	1765	1265	1.11
	1.8	1656	1318	1.16		1.8	1656	1318	1.16
	2.0	1544	1366	1.20		2.0	1544	1366	1.20
T5 C	0.2	-	-	-	T5 H	0.2	-	-	-
	0.4	-	-	-		0.4	-	-	-
	0.6	-	-	-		0.6	-	-	-
	0.8	-	-	-		0.8	-	-	-
	1.0	-	-	-		1.0	-	-	-
	1.2	-	-	-		1.2	-	-	-
	1.4	1970	1223	1.16		1.4	1970	1223	1.16
	1.6	1888	1273	1.21		1.6	1888	1273	1.21
	1.8	1789	1328	1.26		1.8	1789	1328	1.26
	2.0	1676	1382	1.32		2.0	1676	1382	1.32

Shaded area indicates air flow below 1200 SCFM (300 SCFM/ton) that is not recommended for High Stage cooling or heating

5 Ton Cooler • High-Static Drive • Models: DRC0603W, DRC0604W, DRC0607W

Down Flow

SPEED TAP	EXTERNAL STATIC PRESSURE (ESP) IN W. C.	STANDARD CFM	RPM	BHP
T1 C	0.2	997	581	0.12
	0.4	853	673	0.14
	0.6	677	764	0.16
	0.8	537	845	0.18
	1.0	-	-	-
	1.2	-	-	-
	1.4	-	-	-
	1.6	-	-	-
	1.8	-	-	-
	2.0	-	-	-
T2 C	0.2	1815	829	0.46
	0.4	1706	891	0.50
	0.6	1611	956	0.53
	0.8	1510	1013	0.57
	1.0	1422	1066	0.60
	1.2	1325	1121	0.63
	1.4	1217	1175	0.66
	1.6	1113	1231	0.69
	1.8	1008	1286	0.72
	2.0	924	1332	0.75
T3 C	0.2	2360	1024	0.94
	0.4	2275	1067	0.98
	0.6	2189	1118	1.02
	0.8	2114	1169	1.07
	1.0	2031	1217	1.12
	1.2	1955	1261	1.16
	1.4	1878	1303	1.19
	1.6	1808	1344	1.23
	1.8	1722	1385	1.27
	2.0	1645	1429	1.31
T4 C	0.2	-	-	-
	0.4	2459	1132	1.20
	0.6	2369	1170	1.24
	0.8	2286	1217	1.29
	1.0	2225	1263	1.34
	1.2	2151	1307	1.38
	1.4	2075	1349	1.43
	1.6	2002	1386	1.47
	1.8	1939	1426	1.51
	2.0	1855	1463	1.55
T5 C	0.2	-	-	-
	0.4	-	-	-
	0.6	2453	1197	1.35
	0.8	2363	1243	1.41
	1.0	2285	1291	1.46
	1.2	2226	1331	1.50
	1.4	2159	1372	1.55
	1.6	2090	1409	1.59
	1.8	2029	1445	1.63
	2.0	1954	1483	1.68

SPEED TAP	EXTERNAL STATIC PRESSURE (ESP) IN W. C.	STANDARD CFM	RPM	BHP
T1 H	0.2	2271	988	0.85
	0.4	2196	1038	0.89
	0.6	2095	1090	0.93
	0.8	2011	1142	0.98
	1.0	1926	1192	1.02
	1.2	1847	1237	1.06
	1.4	1774	1281	1.10
	1.6	1698	1324	1.13
	1.8	1602	1371	1.17
	2.0	1517	1417	1.21
T2 H	0.2	2360	1024	0.94
	0.4	2275	1067	0.98
	0.6	2189	1118	1.02
	0.8	2114	1169	1.07
	1.0	2031	1217	1.12
	1.2	1955	1261	1.16
	1.4	1878	1303	1.19
	1.6	1808	1344	1.23
	1.8	1722	1385	1.27
	2.0	1645	1429	1.31
T3 H	0.2	2452	1053	1.04
	0.4	2366	1103	1.09
	0.6	2282	1144	1.13
	0.8	2205	1193	1.18
	1.0	2123	1241	1.23
	1.2	2050	1286	1.27
	1.4	1981	1328	1.31
	1.6	1909	1367	1.35
	1.8	1829	1406	1.39
	2.0	1753	1448	1.43
T4 H	0.2	-	-	-
	0.4	2459	1132	1.20
	0.6	2369	1170	1.24
	0.8	2286	1217	1.29
	1.0	2225	1263	1.34
	1.2	2151	1307	1.38
	1.4	2075	1349	1.43
	1.6	2002	1386	1.47
	1.8	1939	1426	1.51
	2.0	1855	1463	1.55
T5 H	0.2	-	-	-
	0.4	-	-	-
	0.6	2453	1197	1.35
	0.8	2363	1243	1.41
	1.0	2285	1291	1.46
	1.2	2226	1331	1.50
	1.4	2159	1372	1.55
	1.6	2090	1409	1.59
	1.8	2029	1445	1.63
	2.0	1954	1483	1.68

Shaded area indicates air flow below 1500 SCFM (300 SCFM/ton) that is not recommended for High Stage cooling or heating

5 Ton Cooler • High-Static Drive • Models: DRC0603W, DRC0604W, DRC0607W

Horizontal Flow									
SPEED TAP	EXTERNAL STATIC PRESSURE (ESP) IN W. C.	STANDARD CFM	RPM	BHP	SPEED TAP	EXTERNAL STATIC PRESSURE (ESP) IN W. C.	STANDARD CFM	RPM	BHP
T1 C	0.2	1154	525	0.11	T1 H	0.2	2316	956	0.82
	0.4	1068	581	0.12		0.4	2239	1004	0.86
	0.6	904	683	0.15		0.6	2160	1053	0.90
	0.8	752	769	0.16		0.8	2075	1100	0.94
	1.0	597	846	0.18		1.0	2001	1155	0.99
	1.2	401	888	0.19		1.2	1939	1205	1.03
	1.4	-	-	-		1.4	1833	1268	1.09
	1.6	-	-	-		1.6	1750	1318	1.13
	1.8	-	-	-		1.8	1660	1365	1.17
	2.0	-	-	-		2.0	1575	1410	1.21
T2 C	0.2	1842	806	0.45	T2 H	0.2	2396	992	0.91
	0.4	1742	866	0.48		0.4	2324	1031	0.94
	0.6	1658	927	0.52		0.6	2260	1079	0.99
	0.8	1569	993	0.56		0.8	2179	1124	1.03
	1.0	1458	1058	0.59		1.0	2110	1179	1.08
	1.2	1355	1118	0.63		1.2	2051	1220	1.12
	1.4	1260	1174	0.66		1.4	1945	1285	1.18
	1.6	1158	1228	0.69		1.6	1867	1336	1.22
	1.8	1069	1279	0.72		1.8	1783	1380	1.26
	2.0	985	1324	0.74		2.0	1698	1427	1.31
T3 C	0.2	2396	992	0.91	T3 H	0.2	2477	1024	1.01
	0.4	2324	1031	0.94		0.4	2407	1058	1.05
	0.6	2260	1079	0.99		0.6	2335	1103	1.09
	0.8	2179	1124	1.03		0.8	2277	1151	1.14
	1.0	2110	1179	1.08		1.0	2202	1197	1.18
	1.2	2051	1220	1.12		1.2	2151	1245	1.23
	1.4	1945	1285	1.18		1.4	2056	1304	1.29
	1.6	1867	1336	1.22		1.6	1970	1358	1.34
	1.8	1783	1380	1.26		1.8	1891	1403	1.39
	2.0	1698	1427	1.31		2.0	1803	1443	1.43
T4 C	0.2	-	-	-	T4 H	0.2	-	-	-
	0.4	2491	1085	1.15		0.4	2491	1085	1.15
	0.6	2422	1125	1.19		0.6	2422	1125	1.19
	0.8	2349	1168	1.24		0.8	2349	1168	1.24
	1.0	2289	1212	1.28		1.0	2289	1212	1.28
	1.2	2209	1268	1.34		1.2	2209	1268	1.34
	1.4	2166	1309	1.39		1.4	2166	1309	1.39
	1.6	2069	1366	1.45		1.6	2069	1366	1.45
	1.8	1994	1411	1.49		1.8	1994	1411	1.49
	2.0	1915	1456	1.54		2.0	1915	1456	1.54
T5 C	0.2	-	-	-	T5 H	0.2	-	-	-
	0.4	-	-	-		0.4	-	-	-
	0.6	-	-	-		0.6	-	-	-
	0.8	2434	1194	1.35		0.8	2434	1194	1.35
	1.0	2372	1238	1.40		1.0	2372	1238	1.40
	1.2	2304	1298	1.47		1.2	2304	1298	1.47
	1.4	2244	1334	1.51		1.4	2244	1334	1.51
	1.6	2169	1381	1.56		1.6	2169	1381	1.56
	1.8	2085	1434	1.62		1.8	2085	1434	1.62
	2.0	2006	1477	1.67		2.0	2006	1477	1.67

Shaded area indicates air flow below 1500 SCFM (300 SCFM/ton) that is not recommended for High Stage cooling or heating

6 Ton Cooler • High-Static Drive • Models: DRC0723W, DRC0724W, DRC0727W

Down Flow

SPEED TAP	EXTERNAL STATIC PRESSURE (ESP) IN W. C.	STANDARD CFM	RPM	BHP
T1 C	0.2	1384	673	0.22
	0.4	1262	751	0.25
	0.6	1145	821	0.27
	0.8	1017	899	0.30
	1.0	884	968	0.32
	1.2	756	1030	0.34
	1.4	564	1069	0.36
	1.6	442	1118	0.37
	1.8	-	-	-
	2.0	-	-	-
T2 C	0.2	2010	864	0.57
	0.4	1918	920	0.60
	0.6	1808	985	0.64
	0.8	1733	1033	0.68
	1.0	1637	1085	0.71
	1.2	1549	1139	0.75
	1.4	1452	1196	0.78
	1.6	1348	1249	0.82
	1.8	1245	1298	0.85
	2.0	1152	1348	0.88
T3 C	0.2	2731	1111	1.34
	0.4	2655	1146	1.38
	0.6	2570	1188	1.43
	0.8	2483	1234	1.48
	1.0	2410	1280	1.54
	1.2	2337	1322	1.59
	1.4	2290	1356	1.63
	1.6	2219	1392	1.67
	1.8	2156	1435	1.72
	2.0	2085	1473	1.77
T4 C	0.2	2815	1142	1.45
	0.4	2741	1177	1.50
	0.6	2668	1211	1.54
	0.8	2585	1255	1.60
	1.0	2507	1302	1.66
	1.2	2436	1350	1.72
	1.4	2369	1383	1.76
	1.6	2320	1416	1.80
	1.8	2255	1454	1.85
	2.0	2188	1492	1.90
T5 C	0.2	2970	1200	1.74
	0.4	2905	1236	1.79
	0.6	2841	1268	1.84
	0.8	2759	1308	1.90
	1.0	2681	1348	1.96
	1.2	2606	1398	2.03
	1.4	2550	1436	2.09
	1.6	2485	1470	2.13
	1.8	-	-	-
	2.0	-	-	-

SPEED TAP	EXTERNAL STATIC PRESSURE (ESP) IN W. C.	STANDARD CFM	RPM	BHP
T1 H	0.2	2615	1069	1.18
	0.4	2538	1108	1.23
	0.6	2448	1148	1.27
	0.8	2372	1195	1.32
	1.0	2299	1246	1.38
	1.2	2224	1282	1.42
	1.4	2160	1326	1.47
	1.6	2092	1364	1.51
	1.8	2021	1405	1.55
	2.0	1946	1448	1.60
T2 H	0.2	2731	1111	1.34
	0.4	2655	1146	1.38
	0.6	2570	1188	1.43
	0.8	2483	1234	1.48
	1.0	2410	1280	1.54
	1.2	2337	1322	1.59
	1.4	2290	1356	1.63
	1.6	2219	1392	1.67
	1.8	2156	1435	1.72
	2.0	2085	1473	1.77
T3 H	0.2	2815	1142	1.45
	0.4	2741	1177	1.50
	0.6	2668	1211	1.54
	0.8	2585	1255	1.60
	1.0	2507	1302	1.66
	1.2	2436	1350	1.72
	1.4	2369	1383	1.76
	1.6	2320	1416	1.80
	1.8	2255	1454	1.85
	2.0	2188	1492	1.90
T4 H	0.2	2903	1176	1.61
	0.4	2829	1204	1.65
	0.6	2769	1242	1.70
	0.8	2681	1284	1.76
	1.0	2601	1323	1.81
	1.2	2530	1372	1.88
	1.4	2466	1406	1.92
	1.6	2424	1440	1.97
	1.8	2356	1476	2.02
	2.0	-	-	-
T5 H	0.2	2970	1200	1.74
	0.4	2905	1236	1.79
	0.6	2841	1268	1.84
	0.8	2759	1308	1.90
	1.0	2681	1348	1.96
	1.2	2606	1398	2.03
	1.4	2550	1436	2.09
	1.6	2485	1470	2.13
	1.8	-	-	-
	2.0	-	-	-

Shaded area indicates air flow below 1800 SCFM (300 SCFM/ton) that is not recommended for High Stage cooling or heating

6 Ton Cooler • High-Static Drive • Models: DRC0723W, DRC0724W, DRC0727W

Horizontal Flow									
SPEED TAP	EXTERNAL STATIC PRESSURE (ESP) IN W. C.	STANDARD CFM	RPM	BHP	SPEED TAP	EXTERNAL STATIC PRESSURE (ESP) IN W. C.	STANDARD CFM	RPM	BHP
T1 C	0.2	1377	646	0.22	T1 H	0.2	2599	1065	1.18
	0.4	1261	737	0.25		0.4	2545	1095	1.21
	0.6	1130	818	0.27		0.6	2475	1130	1.25
	0.8	1012	894	0.30		0.8	2400	1171	1.30
	1.0	884	966	0.32		1.0	2333	1220	1.35
	1.2	765	1026	0.34		1.2	2261	1271	1.41
	1.4	638	1092	0.36		1.4	2216	1317	1.46
	1.6	487	1113	0.37		1.6	2137	1372	1.52
	1.8	-	-	-		1.8	2053	1421	1.57
	2.0	-	-	-		2.0	1976	1461	1.62
T2 C	0.2	2021	852	0.56	T2 H	0.2	2690	1108	1.33
	0.4	1942	897	0.59		0.4	2634	1140	1.37
	0.6	1854	951	0.62		0.6	2576	1165	1.40
	0.8	1762	1025	0.67		0.8	2509	1206	1.45
	1.0	1670	1086	0.71		1.0	2440	1251	1.50
	1.2	1586	1140	0.75		1.2	2370	1297	1.56
	1.4	1485	1197	0.78		1.4	2307	1348	1.62
	1.6	1384	1252	0.82		1.6	2244	1390	1.67
	1.8	1287	1306	0.85		1.8	2177	1441	1.73
	2.0	1198	1352	0.89		2.0	2092	1484	1.78
T3 C	0.2	2690	1108	1.33	T3 H	0.2	2797	1137	1.45
	0.4	2634	1140	1.37		0.4	2745	1163	1.48
	0.6	2576	1165	1.40		0.6	2680	1194	1.52
	0.8	2509	1206	1.45		0.8	2612	1231	1.57
	1.0	2440	1251	1.50		1.0	2537	1272	1.62
	1.2	2370	1297	1.56		1.2	2463	1316	1.68
	1.4	2307	1348	1.62		1.4	2420	1357	1.73
	1.6	2244	1390	1.67		1.6	2356	1397	1.78
	1.8	2177	1441	1.73		1.8	2292	1444	1.84
	2.0	2092	1484	1.78		2.0	2216	1491	1.90
T4 C	0.2	2797	1137	1.45	T4 H	0.2	2878	1159	1.59
	0.4	2745	1163	1.48		0.4	2819	1189	1.63
	0.6	2680	1194	1.52		0.6	2763	1218	1.67
	0.8	2612	1231	1.57		0.8	2712	1250	1.71
	1.0	2537	1272	1.62		1.0	2640	1288	1.76
	1.2	2463	1316	1.68		1.2	2572	1330	1.82
	1.4	2420	1357	1.73		1.4	2507	1375	1.88
	1.6	2356	1397	1.78		1.6	2440	1426	1.95
	1.8	2292	1444	1.84		1.8	2402	1460	2.00
	2.0	2216	1491	1.90		2.0	-	-	-
T5 C	0.2	2961	1195	1.74	T5 H	0.2	2961	1195	1.74
	0.4	2904	1226	1.78		0.4	2904	1226	1.78
	0.6	2848	1253	1.82		0.6	2848	1253	1.82
	0.8	2794	1276	1.85		0.8	2794	1276	1.85
	1.0	2733	1315	1.91		1.0	2733	1315	1.91
	1.2	2669	1358	1.97		1.2	2669	1358	1.97
	1.4	2608	1394	2.02		1.4	2608	1394	2.02
	1.6	2546	1441	2.09		1.6	2546	1441	2.09
	1.8	2497	1483	2.15		1.8	2497	1483	2.15
	2.0	-	-	-		2.0	-	-	-

Shaded area indicates air flow below 1800 SCFM (300 SCFM/ton) that is not recommended for High Stage cooling or heating

3 Ton Models: DRC0363D, DRC0364D & DRC0367D with DDC Control • Standard Static • Down Flow

CFM	0.2			0.4			0.6			0.8			1.0		
	RPM	DDC %	BHP	RPM	DDC %	BHP	RPM	DDC %	BHP	RPM	DDC %	BHP	RPM	DDC %	BHP
600				621	25	0.11	739	30	0.16	812	34	0.20	879	33	0.25
800	494	25	0.09	656	31	0.14	771	35	0.20	854	39	0.26	927	40	0.32
1000	549	31	0.12	691	36	0.19	802	40	0.25	895	44	0.34	975	47	0.41
1200	605	36	0.17	726	41	0.24	833	45	0.32	937	49	0.43	1023	53	0.52
1400	660	42	0.24	760	47	0.31	865	50	0.41	978	54	0.56	1071	60	0.66
1500	688	45	0.29	778	49	0.35	881	53	0.46	999	56	0.64	1095	63	0.74

Shaded area indicates air flow below 900 SCFM (300 SCFM/ton) that is not recommended for High Stage cooling or heating.
Valid motor operating range for DDC% setting is 20 - 90.

HORIZONTAL FLOW

CFM	0.2			0.4			0.6			0.8			1.0		
	RPM	DDC %	BHP	RPM	DDC %	BHP	RPM	DDC %	BHP	RPM	DDC %	BHP	RPM	DDC %	BHP
600				627	26	0.11	743	31	0.16	840	34	0.21	930	40	0.26
800	497	22	0.08	660	31	0.14	772	35	0.20	871	39	0.26	957	43	0.32
1000	550	31	0.12	693	36	0.19	801	40	0.25	902	44	0.33	984	47	0.39
1200	604	39	0.17	726	41	0.25	830	45	0.32	933	49	0.42	1011	50	0.47
1400	658	48	0.25	759	46	0.33	859	50	0.41	964	53	0.54	1038	53	0.58
1500	684	52	0.29	775	49	0.38	874	52	0.46	980	56	0.60	1052	55	0.64

Shaded area indicates air flow below 900 SCFM (300 SCFM/ton) that is not recommended for High Stage cooling or heating.
Valid motor operating range for DDC% setting is 20 - 90.

3 Ton Models: DRC0363W, DRC0364W & DRC0367W with DDC Control • High Static • Down Flow

CFM	0.2			0.4			0.6			0.8			1.0		
	RPM	DDC %	BHP	RPM	DDC %	BHP	RPM	DDC %	BHP	RPM	DDC %	BHP	RPM	DDC %	BHP
600				632	26	0.11	742	29	0.15	839	33	0.20	930	36	0.27
800	497	24	0.08	661	30	0.14	774	34	0.20	869	39	0.25	963	42	0.34
1000	550	30	0.12	690	35	0.18	806	39	0.27	898	44	0.31	996	48	0.42
1200	604	36	0.17	719	39	0.24	839	44	0.35	928	49	0.38	1029	54	0.52
1400	658	42	0.25	748	44	0.32	871	48	0.47	958	55	0.48	1062	60	0.65
1500	684	45	0.29	763	46	0.37	887	51	0.54	972	57	0.53	1079	63	0.73
CFM	1.2			1.4			1.6			1.8			2.0		
	RPM	DDC %	BHP	RPM	DDC %	BHP	RPM	DDC %	BHP	RPM	DDC %	BHP	RPM	DDC %	BHP
600	1008	43	0.34	1056	38	0.39	1139	43	0.48	1222	48	0.57	1288	51	0.62
800	1038	48	0.41	1093	46	0.48	1171	50	0.58	1246	55	0.67	1309	58	0.72
1000	1069	52	0.49	1130	53	0.58	1203	58	0.69	1270	62	0.78	1330	65	0.82
1200	1100	57	0.59	1166	61	0.71	1235	65	0.83	1294	68	0.92	1351	72	0.95
1400	1130	61	0.71	1203	69	0.87	1267	73	0.99	1318	75	1.08	1372	79	1.09
1500	1146	64	0.77	1222	73	0.96	1283	76	1.08	1330	79	1.17	1382	82	1.17

Shaded area indicates air flow below 900 SCFM (300 SCFM/ton) that is not recommended for High Stage cooling or heating.
Valid motor operating range for DDC% setting is 20 - 90.

HORIZONTAL FLOW

CFM	0.2			0.4			0.6			0.8			1.0		
	RPM	DDC %	BHP	RPM	DDC %	BHP	RPM	DDC %	BHP	RPM	DDC %	BHP	RPM	DDC %	BHP
600				617	26	0.11	740	30	0.15	826	32	0.20	917	36	0.26
800	494	25	0.09	656	31	0.14	769	35	0.19	860	38	0.25	950	42	0.33
1000	550	31	0.12	695	35	0.19	797	39	0.25	894	44	0.31	982	48	0.41
1200	605	37	0.18	734	40	0.25	826	44	0.31	928	50	0.39	1014	55	0.51
1400	660	42	0.26	774	45	0.33	854	49	0.40	962	56	0.49	1047	61	0.64
1500	687	45	0.31	793	47	0.37	869	51	0.45	978	59	0.55	1063	64	0.71
CFM	1.2			1.4			1.6			1.8			2.0		
	RPM	DDC %	BHP	RPM	DDC %	BHP	RPM	DDC %	BHP	RPM	DDC %	BHP	RPM	DDC %	BHP
600	996	41	0.34	1059	38	0.39	1136	42	0.45	1205	47	0.55	1256	50	0.60
800	1027	47	0.41	1090	46	0.47	1164	50	0.53	1230	55	0.65	1284	58	0.70
1000	1057	53	0.50	1122	54	0.56	1191	58	0.64	1255	62	0.78	1313	65	0.82
1200	1087	59	0.61	1154	62	0.68	1218	66	0.77	1279	70	0.94	1341	73	0.96
1400	1118	65	0.75	1185	70	0.81	1246	74	0.92	1304	77	1.12	1370	80	1.13
1500	1133	68	0.83	1201	74	0.88	1260	78	1.00	1316	81	1.17	1384	84	1.18

Shaded area indicates air flow below 900 SCFM (300 SCFM/ton) that is not recommended for High Stage cooling or heating.
Valid motor operating range for DDC% setting is 20 - 90.

4 Ton Models: DRC0483D, DRC0484D & DRC0487D with DDC Control • Standard Static • Down Flow

CFM	0.2			0.4			0.6			0.8			1.0		
	RPM	DDC %	BHP	RPM	DDC %	BHP	RPM	DDC %	BHP	RPM	DDC %	BHP	RPM	DDC %	BHP
800	506	25	0.10	660	31	0.15	773	36	0.20	879	41	0.28	958	46	0.36
1000	567	32	0.14	706	38	0.20	811	42	0.25	909	46	0.35	988	51	0.43
1200	627	39	0.19	751	44	0.26	849	48	0.32	940	52	0.43	1018	55	0.53
1400	687	46	0.26	796	50	0.35	888	54	0.41	971	58	0.54	1048	60	0.65
1600	748	53	0.36	841	57	0.46	926	60	0.52	1002	63	0.67	1078	65	0.79
1800	808	60	0.50	886	63	0.61	964	66	0.66	1032	69	0.84	1108	70	0.97
2000	869	66	0.68	932	70	0.81	1003	72	0.84	1063	74	1.04	1138	75	1.18

Shaded area indicates air flow below 1200 SCFM (300 SCFM/ton) that is not recommended for High Stage cooling or heating.
Valid motor operating range for DDC% setting is 20 - 90.

HORIZONTAL FLOW

CFM	0.2			0.4			0.6			0.8			1.0		
	RPM	DDC %	BHP	RPM	DDC %	BHP	RPM	DDC %	BHP	RPM	DDC %	BHP	RPM	DDC %	BHP
800	483	24	0.09	638	30	0.14	753	34	0.20	860	39	0.25	948	44	0.35
1000	542	31	0.13	680	36	0.18	784	40	0.29	882	45	0.31	967	49	0.41
1200	601	38	0.17	722	43	0.23	814	46	0.39	904	50	0.37	987	54	0.50
1400	659	45	0.24	763	49	0.30	845	52	0.51	926	55	0.46	1006	58	0.59
1600	718	52	0.33	805	55	0.38	875	58	0.68	948	61	0.56	1026	63	0.71
1800	777	59	0.46	847	61	0.50	906	64	0.90	970	66	0.68	1045	68	0.85
2000	835	66	0.63	889	68	0.64	936	70	0.79	992	72	0.83	1065	72	1.02

Shaded area indicates air flow below 1200 SCFM (300 SCFM/ton) that is not recommended for High Stage cooling or heating.
Valid motor operating range for DDC% setting is 20 - 90.

4 Ton Models: DRC0483W, DRC0484W & DRC0487W with DDC Control • High Static • Down Flow

CFM	0.2			0.4			0.6			0.8			1.0		
	RPM	DDC %	BHP	RPM	DDC %	BHP	RPM	DDC %	BHP	RPM	DDC %	BHP	RPM	DDC %	BHP
800	505	24	0.10	657	29	0.14	771	35	0.21	880	40	0.28	944	38	0.34
1000	566	31	0.13	706	37	0.19	813	42	0.26	915	47	0.35	982	46	0.42
1200	626	38	0.17	755	44	0.24	856	49	0.33	950	53	0.43	1020	54	0.51
1400	687	45	0.24	804	51	0.31	898	56	0.42	985	60	0.54	1059	62	0.62
1600	748	53	0.32	853	58	0.41	941	63	0.54	1020	67	0.67	1097	70	0.76
1800	809	60	0.43	902	65	0.53	983	70	0.68	1055	73	0.84	1135	78	0.93
2000	869	67	0.58	951	72	0.68	1026	77	0.87	1090	80	1.05	1173	87	1.14
CFM	1.2			1.4			1.6			1.8			2.0		
	RPM	DDC %	BHP	RPM	DDC %	BHP	RPM	DDC %	BHP	RPM	DDC %	BHP	RPM	DDC %	BHP
800	1022	42	0.40	1116	48	0.48	1223	55	0.63	1205	54	0.59	1301	55	0.76
1000	1058	50	0.48	1145	55	0.57	1241	62	0.72	1247	62	0.70	1332	64	0.90
1200	1095	58	0.58	1174	63	0.66	1259	68	0.83	1289	70	0.84	1363	73	1.05
1400	1131	66	0.69	1203	71	0.78	1277	75	0.96	1331	78	1.01	1394	83	1.15
1600	1167	74	0.83	1232	78	0.91	1295	82	1.10	1373	90	1.20			
1800	1203	83	0.99	1262	86	1.07	1313	90	1.20						
2000	1239	90	1.19	1291											

Shaded area indicates air flow below 1200 SCFM (300 SCFM/ton) that is not recommended for High Stage cooling or heating.
Valid motor operating range for DDC% setting is 20 - 90.

HORIZONTAL FLOW

CFM	0.2			0.4			0.6			0.8			1.0		
	RPM	DDC %	BHP	RPM	DDC %	BHP	RPM	DDC %	BHP	RPM	DDC %	BHP	RPM	DDC %	BHP
800	487	24	0.08	635	28	0.14	750	33	0.20	862	31	0.25	932	36	0.33
1000	544	30	0.12	679	35	0.18	785	40	0.25	890	39	0.30	958	44	0.39
1200	600	36	0.16	722	42	0.23	821	46	0.32	918	47	0.37	985	51	0.47
1400	657	43	0.22	766	48	0.30	856	53	0.40	946	55	0.45	1012	59	0.56
1600	713	49	0.30	810	55	0.39	891	59	0.51	974	62	0.56	1039	66	0.67
1800	769	55	0.42	854	62	0.50	927	66	0.65	1001	70	0.68	1065	74	0.80
2000	826	61	0.57	897	68	0.65	962	72	0.83	1029	78	0.83	1092	81	0.96
CFM	**1.2**			**1.4**			**1.6**			**1.8**			**2.0**		
	RPM	DDC %	BHP	RPM	DDC %	BHP	RPM	DDC %	BHP	RPM	DDC %	BHP	RPM	DDC %	BHP
800	1010	40	0.40	1111	46	0.50	1173	50	0.53	1200	44	0.52	1281	58	0.71
1000	1034	48	0.47	1129	53	0.58	1192	57	0.61	1228	54	0.63	1303	65	0.83
1200	1058	55	0.57	1147	60	0.68	1210	64	0.70	1256	63	0.77	1325	72	0.98
1400	1082	63	0.68	1164	67	0.80	1229	71	0.81	1283	73	0.94	1347	79	1.15
1600	1106	70	0.81	1182	75	0.94	1248	78	0.93	1311	82	1.15	1369	86	1.18
1800	1130	77	0.97	1200	82	1.10	1266	85	1.07	1339	92	1.40	1391	93	1.58
2000	1154	85	1.17	1218	90	1.20	1285	92	1.23	1367	101	1.71	1414	100	1.85

Shaded area indicates air flow below 1200 SCFM (300 SCFM/ton) that is not recommended for High Stage cooling or heating.
Valid motor operating range for DDC% setting is 20 - 90.

5 Ton Models: DRC0603D, DRC0604D & DRC0607D with DDC Control • Standard Static • Down Flow

CFM	0.2			0.4			0.6			0.8			1.0		
	RPM	DDC %	BHP	RPM	DDC %	BHP	RPM	DDC %	BHP	RPM	DDC %	BHP	RPM	DDC %	BHP
900	537	26	0.10	675	32	0.16	801	37	0.21	905	42	0.29	939	44	0.30
1100	600	34	0.14	728	39	0.21	842	44	0.27	936	48	0.36	980	50	0.38
1300	663	41	0.19	781	46	0.27	883	50	0.34	966	54	0.44	1021	57	0.47
1500	727	48	0.25	834	53	0.36	924	57	0.44	997	60	0.55	1062	63	0.59
1700	790	56	0.34	887	60	0.48	965	63	0.55	1027	66	0.69	1103	69	0.73
1900	853	63	0.46	940	67	0.63	1005	70	0.70	1058	72	0.86	1144	75	0.92
2100	916	70	0.63	993	74	0.84	1046	76	0.90	1088	78	1.07	1185	81	1.14
2300	979	78	0.84	1046	81	1.11	1087	82	1.14						
2500	1042	85	1.14												

Shaded area indicates air flow below 1500 SCFM (300 SCFM/ton) that is not recommended for High Stage cooling or heating.
Valid motor operating range for DDC% setting is 20 - 90.

HORIZONTAL FLOW

CFM	0.2			0.4			0.6			0.8			1.0		
	RPM	DDC %	BHP	RPM	DDC %	BHP	RPM	DDC %	BHP	RPM	DDC %	BHP	RPM	DDC %	BHP
900	514	25	0.10	642	30	0.15	771	35	0.20	863	40	0.26	950	43	0.30
1100	569	32	0.14	689	37	0.20	808	42	0.25	894	46	0.32	974	49	0.37
1300	624	40	0.19	736	44	0.26	844	49	0.32	925	52	0.40	997	55	0.45
1500	680	47	0.26	782	51	0.35	880	55	0.41	955	58	0.50	1021	61	0.55
1700	735	54	0.35	829	58	0.46	917	62	0.52	986	65	0.63	1045	67	0.68
1900	790	62	0.47	876	65	0.61	953	68	0.66	1017	71	0.78	1069	72	0.83
2100	845	69	0.63	922	72	0.81	990	75	0.84	1048	77	0.97	1093	78	1.01
2300	900	76	0.86	969	79	1.07	1026	82	1.06						
2500	955	84	1.16												

Shaded area indicates air flow below 1500 SCFM (300 SCFM/ton) that is not recommended for High Stage cooling or heating.
Valid motor operating range for DDC% setting is 20 - 90.

5 Ton Models: DRC0603W, DRC0604W & DRC0607W with DDC Control • High Static • Down Flow

CFM	0.2			0.4			0.6			0.8			1.0		
	RPM	DDC %	BHP	RPM	DDC %	BHP	RPM	DDC %	BHP	RPM	DDC %	BHP	RPM	DDC %	BHP
900				678	22	0.15	806	26	0.21	909	29	0.27	932	23	0.35
1100	609	24	0.15	735	27	0.20	855	31	0.27	952	34	0.34	983	29	0.43
1300	674	29	0.20	792	33	0.25	903	36	0.35	996	39	0.42	1034	35	0.52
1500	739	35	0.27	848	38	0.33	952	41	0.44	1039	44	0.52	1084	42	0.64
1700	804	40	0.36	905	43	0.43	1001	46	0.56	1083	49	0.65	1135	48	0.78
1900	869	45	0.49	962	48	0.55	1050	51	0.71	1126	54	0.81	1186	55	0.95
2100	934	50	0.66	1019	53	0.72	1098	56	0.90	1169	59	1.01	1236	61	1.16
2300	999	56	0.89	1076	58	0.93	1147	62	1.15	1213	63	1.26	1287	67	1.42
2500	1064	61	1.20	1133	64	1.20	1196	67	1.46	1256	68	1.57	1338	74	1.73
CFM	1.2			1.4			1.6			1.8			2.0		
	RPM	DDC %	BHP	RPM	DDC %	BHP	RPM	DDC %	BHP	RPM	DDC %	BHP	RPM	DDC %	BHP
900	1021	26	0.44	1106	30	0.50	1188	33	0.60	1266	36	0.66	1327	39	0.75
1100	1067	32	0.54	1147	36	0.59	1224	39	0.72	1297	42	0.78	1356	44	0.88
1300	1113	38	0.65	1189	42	0.71	1260	44	0.86	1327	47	0.91	1385	49	1.04
1500	1159	45	0.80	1230	48	0.85	1295	50	1.03	1358	53	1.07	1413	55	1.22
1700	1205	51	0.98	1271	53	1.02	1331	56	1.23	1388	58	1.26	1442	60	1.43
1900	1251	57	1.19	1312	59	1.22	1367	61	1.47	1419	63	1.48	1470	66	1.67
2100	1297	63	1.46	1353	65	1.46	1402	67	1.55	1449	69	1.73	1499	71	1.80
2300	1343	69	1.78	1395	71	1.75	1438	73	1.80	1480	74	1.90	1528	76	1.97
2500	1389	75	1.96	1436	77	1.97	1474	78	1.98	1510	80	2.22	1556	82	2.25

Shaded area indicates air flow below 1500 SCFM (300 SCFM/ton) that is not recommended for High Stage cooling or heating.
Valid motor operating range for DDC% setting is 20 - 90.

HORIZONTAL FLOW

CFM	0.2			0.4			0.6			0.8			1.0		
	RPM	DDC %	BHP	RPM	DDC %	BHP	RPM	DDC %	BHP	RPM	DDC %	BHP	RPM	DDC %	BHP
900							694	21	0.17	814	25	0.24	924	29	0.31
1100	516	21	0.13	612	23	0.16	751	27	0.22	863	30	0.30	967	34	0.38
1300	590	26	0.17	681	29	0.21	808	32	0.29	913	36	0.38	1009	39	0.48
1500	663	32	0.23	750	34	0.27	865	38	0.38	962	41	0.49	1051	44	0.59
1700	737	38	0.31	819	40	0.36	922	43	0.49	1011	46	0.62	1093	49	0.74
1900	811	43	0.42	888	46	0.48	979	49	0.64	1060	52	0.79	1136	54	0.92
2100	885	49	0.56	957	52	0.63	1037	54	0.82	1109	57	1.00	1178	59	1.15
2300	958	55	0.76	1026	58	0.83	1094	60	1.07	1158	62	1.27	1220	64	1.43
2500	1032	60	1.03	1095	63	1.10	1151	65	1.39	1208	67	1.61	1263	69	1.78
CFM	**1.2**			**1.4**			**1.6**			**1.8**			**2.0**		
	RPM	DDC %	BHP	RPM	DDC %	BHP	RPM	DDC %	BHP	RPM	DDC %	BHP	RPM	DDC %	BHP
900	999	32	0.37	1119	29	0.54	1189	32	0.63	1253	35	0.65	1311	37	0.72
1100	1040	37	0.45	1150	35	0.64	1219	38	0.73	1282	40	0.74	1340	42	0.83
1300	1081	42	0.55	1182	40	0.75	1250	43	0.86	1312	46	0.85	1370	48	0.96
1500	1122	46	0.67	1213	46	0.88	1281	49	1.01	1342	51	0.98	1399	53	1.10
1700	1162	51	0.82	1245	52	1.03	1311	54	1.19	1372	56	1.13	1428	59	1.27
1900	1203	56	1.00	1276	57	1.21	1342	60	1.39	1402	62	1.30	1458	64	1.46
2100	1244	60	1.22	1308	63	1.42	1372	65	1.63	1431	67	1.50	1487	69	1.68
2300	1285	65	1.49	1339	68	1.67	1403	71	1.92	1461	73	1.72	1516	75	1.93
2500	1326	70	1.82	1371	74	1.96	1434	76	1.97	1491	78	1.98	1545	80	2.22

Shaded area indicates air flow below 1500 SCFM (300 SCFM/ton) that is not recommended for High Stage cooling or heating.
Valid motor operating range for DDC% setting is 20 - 90.

6 Ton Models: DRC0723D, DRC0724D & DRC0727D with DDC Control • Standard Static • Down Flow

CFM	0.2			0.4			0.6			0.8			1.0		
	RPM	DDC %	BHP	RPM	DDC %	BHP	RPM	DDC %	BHP	RPM	DDC %	BHP	RPM	DDC %	BHP
1200	574	30	0.17	692	36	0.23	814	42	0.28	912	47	0.34	990	51	0.47
1400	633	39	0.23	739	44	0.29	849	50	0.35	939	54	0.42	1013	58	0.57
1600	691	48	0.31	787	53	0.38	884	57	0.44	967	62	0.51	1036	65	0.70
1800	750	57	0.41	835	61	0.49	920	65	0.55	994	69	0.63	1059	73	0.85
2000	808	66	0.56	882	70	0.64	955	73	0.68	1021	77	0.76	1082	80	1.04
2200	867	75	0.75	930	78	0.83	990	81	0.85	1048	84	0.93			
2400	925	83	1.02	978	86	1.08	1026	89	1.06						
2600															
2800															
3000															

Shaded area indicates air flow below 1800 SCFM (300 SCFM/ton) that is not recommended for High Stage cooling or heating.
Valid motor operating range for DDC% setting is 20 - 90.

HORIZONTAL FLOW

CFM	0.2			0.4			0.6			0.8			1.0		
	RPM	DDC %	BHP	RPM	DDC %	BHP	RPM	DDC %	BHP	RPM	DDC %	BHP	RPM	DDC %	BHP
1200	586	31	0.15	709	37	0.23	807	41	0.28	910	46	0.35	994	50	0.43
1400	646	40	0.20	759	45	0.29	851	49	0.36	946	54	0.44	1024	57	0.52
1600	706	48	0.27	808	53	0.38	894	57	0.46	981	61	0.55	1055	65	0.64
1800	766	57	0.35	857	61	0.49	938	65	0.59	1016	68	0.69	1085	72	0.78
2000	826	66	0.47	907	69	0.64	981	73	0.74	1051	76	0.86	1115	79	0.95
2200	886	74	0.62	956	77	0.83	1025	81	0.95	1087	83	1.07	1146	86	1.16
2400	947	83	0.82	1005	85	1.08	1068	88	1.20						
2600	1007	90	1.08												
2800															
3000															

Shaded area indicates air flow below 1800 SCFM (300 SCFM/ton) that is not recommended for High Stage cooling or heating.
Valid motor operating range for DDC% setting is 20 - 90.

6 Ton Models: DRC0723W, DRC0724W & DRC0727W with DDC Control • High Static • Down Flow

CFM	0.2			0.4			0.6			0.8			1.0		
	RPM	DDC %	BHP	RPM	DDC %	BHP	RPM	DDC %	BHP	RPM	DDC %	BHP	RPM	DDC %	BHP
1200	604	21	0.19	722	24	0.24	831	28	0.30	928	32	0.39	1019	35	0.44
1400	671	27	0.24	781	31	0.31	883	35	0.37	975	38	0.49	1062	42	0.54
1600	737	34	0.31	840	37	0.39	935	41	0.46	1023	44	0.61	1105	48	0.66
1800	804	41	0.41	899	44	0.50	987	48	0.57	1070	51	0.76	1147	54	0.81
2000	871	47	0.53	958	51	0.64	1040	54	0.71	1117	57	0.95	1190	60	0.99
2200	937	54	0.69	1017	58	0.81	1092	61	0.89	1165	63	1.18	1233	66	1.20
2400	1004	61	0.89	1075	64	1.03	1144	67	1.11	1212	70	1.47	1276	72	1.47
2600	1070	68	1.15	1134	71	1.31	1196	74	1.38	1260	76	1.84	1319	79	1.80
2800	1137	75	1.50	1193	78	1.66	1248	80	1.72	1307	83	1.90	1362	85	2.10
3000	1204	82	1.94	1252	85	2.12	1301	87	2.14	1354	89	2.20			
CFM	1.2			1.4			1.6			1.8			2.0		
	RPM	DDC %	BHP	RPM	DDC %	BHP	RPM	DDC %	BHP	RPM	DDC %	BHP	RPM	DDC %	BHP
1200	1098	39	0.55	1169	43	0.64	1234	46	0.67	1287	43	0.85	1353	46	0.86
1400	1138	45	0.67	1206	48	0.77	1267	51	0.79	1319	49	0.99	1380	52	0.99
1600	1178	51	0.82	1242	54	0.92	1300	56	0.93	1350	55	1.16	1407	58	1.14
1800	1218	57	1.00	1278	60	1.10	1333	62	1.09	1381	61	1.37	1434	63	1.31
2000	1258	63	1.23	1314	65	1.32	1366	67	1.27	1413	67	1.60	1462	69	1.51
2200	1298	69	1.50	1350	71	1.58	1399	72	1.50	1444	74	1.88	1489	75	1.74
2400	1338	75	1.83	1387	76	1.89	1432	78	1.76	1475	80	1.90	1516	81	2.00
2600	1378	80	2.00	1423	82	2.10	1465	83	2.11	1506	86	2.20	1543	87	2.30
2800	1418	86	2.20	1459	87	2.25	1498	89	2.30						
3000															

Shaded area indicates air flow below 1800 SCFM (300 SCFM/ton) that is not recommended for High Stage cooling or heating.
Valid motor operating range for DDC% setting is 20 - 90.

HORIZONTAL FLOW

CFM	0.2			0.4			0.6			0.8			1.0		
	RPM	DDC %	BHP	RPM	DDC %	BHP	RPM	DDC %	BHP	RPM	DDC %	BHP	RPM	DDC %	BHP
1200	578	21	0.18	702	24	0.24	816	28	0.29	922	32	0.36	1014	35	0.46
1400	648	27	0.23	762	30	0.30	867	34	0.36	965	38	0.44	1052	41	0.56
1600	717	34	0.30	822	37	0.38	917	41	0.45	1009	44	0.54	1090	47	0.68
1800	787	41	0.39	882	44	0.49	968	47	0.56	1052	50	0.66	1128	53	0.83
2000	857	48	0.51	942	51	0.62	1019	54	0.70	1095	57	0.80	1166	59	1.02
2200	927	55	0.66	1002	58	0.79	1070	60	0.87	1138	63	0.98	1204	65	1.25
2400	997	62	0.86	1062	64	1.00	1121	67	1.09	1181	69	1.19	1242	71	1.52
2600	1067	69	1.11	1122	71	1.28	1172	73	1.36	1224	75	1.46	1280	77	1.50
2800	1137	76	1.44	1182	78	1.62	1223	80	1.69	1268	81	1.78	1318	83	1.80
3000	1207	83	1.87	1242	85	2.06	1274	86	2.11	1311	88	2.18	1356	89	2.30
CFM	1.2			1.4			1.6			1.8			2.0		
	RPM	DDC %	BHP	RPM	DDC %	BHP	RPM	DDC %	BHP	RPM	DDC %	BHP	RPM	DDC %	BHP
1200	1091	38	0.50	1169	41	0.61	1224	45	0.65	1295	41	0.83	1353	45	0.94
1400	1126	44	0.60	1200	47	0.73	1256	50	0.77	1324	48	0.98	1381	51	1.10
1600	1161	50	0.72	1231	52	0.88	1287	55	0.90	1352	54	1.15	1409	57	1.30
1800	1196	56	0.86	1262	58	1.05	1319	61	1.05	1381	60	1.35	1437	63	1.52
2000	1231	62	1.03	1293	64	1.26	1351	66	1.24	1409	67	1.58	1465	69	1.78
2200	1266	67	1.23	1324	69	1.51	1382	71	1.45	1437	73	1.86	1493	75	2.09
2400	1301	73	1.47	1355	75	1.80	1414	77	1.70	1466	80	2.18	1521	81	2.46
2600	1336	79	1.76	1386	81	2.16	1445	82	2.00	1494	86	2.20	1550	87	2.25
2800	1371	85	2.11	1417	86	2.20	1477	88	2.30						
3000															

Shaded area indicates air flow below 1800 SCFM (300 SCFM/ton) that is not recommended for High Stage cooling or heating.
Valid motor operating range for DDC% setting is 20 - 90.

Static Pressure

3-6 TONS		
DOWNFLOW ECONOMIZER PRESSURE DROP		
Cabinet	CFM	SP in.wg.
3 Ton	900	.03"
	1200	.05"
	1500	.08"
4 Ton	1200	.06"
	1600	.10"
	2000	.14"
5 Ton	1500	.08"
	2000	.14"
	2500	.22"
6 Ton	1800	.13"
	2400	.22"
	3000	.33"

3-6 TONS		
HORIZONTAL ECONOMIZER PRESSURE DROP		
Cabinet	CFM	SP in.wg.
3 Ton	900	.06"
	1200	.11"
	1500	.16"
4 Ton	1200	.11"
	1600	.19"
	2000	.29"
5 Ton	1500	.18"
	2000	.30"
	2500	.45"
6 Ton	1800	.24"
	2400	.41"
	3000	.61"

DRC036 (3 Tons) With DDC Control In Modulating Hot Gas Reheat Mode - High Stage

	EAT (DB) (OF)		75			75			75			75		
	EAT (WB) (OF)			62			64			68			71	
Ambient Temperature (oF)		CFM	900	1100	1200	900	1100	1200	900	1100	1200	900	1100	1200
95	TC	Btu/h	12383	12032	11857	14357	14194	14112	18305	18517	18623	21266	21759	22006
	S/T	-	0.51	0.60	0.65	0.42	0.50	0.53	0.24	0.28	0.30	0.11	0.12	0.12
	CMPR	W	2.22	2.21	2.21	2.24	2.24	2.24	2.29	2.29	2.29	2.32	2.33	2.33
85	TC	Btu/h	13144	12681	12449	15163	14910	14784	19199	19369	19455	22227	22714	22957
	S/T	-	0.46	0.54	0.57	0.40	0.46	0.49	0.27	0.30	0.31	0.17	0.18	0.18
	CMPR	W	1.99	1.98	1.98	2.01	2.00	2.00	2.05	2.04	2.04	2.07	2.07	2.07
80	TC	Btu/h	13525	13005	12745	15565	15269	15120	19646	19796	19870	22707	23191	23433
	S/T	-	0.44	0.50	0.54	0.38	0.44	0.46	0.28	0.30	0.32	0.20	0.21	0.21
	CMPR	W	1.88	1.87	1.86	1.89	1.88	1.88	1.93	1.92	1.92	1.95	1.95	1.95
70	TC	Btu/h	13766	13241	12978	16332	16127	16025	21463	21900	22119	25311	26230	26690
	S/T	-	0.43	0.50	0.53	0.39	0.44	0.47	0.29	0.33	0.35	0.23	0.25	0.26
	CMPR	W	1.86	1.86	1.85	1.87	1.87	1.86	1.89	1.89	1.89	1.91	1.90	1.90
65	TC	Btu/h	13887	13359	13095	16715	16557	16478	22371	22953	23244	26613	27750	28318
	S/T	-	0.43	0.49	0.52	0.39	0.44	0.47	0.30	0.34	0.36	0.24	0.27	0.28
	CMPR	W	1.85	1.85	1.85	1.86	1.86	1.86	1.87	1.87	1.87	1.88	1.88	1.88

DRC036 (3 Tons) With DDC Control In Modulating Hot Gas Reheat Mode - Low Stage

	EAT (DB) (OF)		75			75			75			75		
	EAT (WB) (OF)			62			64			68			71	
Ambient Temperature (oF)		CFM	900	1100	1200	900	1100	1200	900	1100	1200	900	1100	1200
60	TC	Btu/h	9201	8752	8528	12251	12165	12122	18350	18990	19310	22924	24109	24701
	S/T	-	0.623	0.732	0.786	0.447	0.521	0.558	0.318	0.362	0.384	0.271	0.296	0.309
	CMPR	W	1.23	1.22	1.22	1.22	1.21	1.21	1.20	1.20	1.20	1.19	1.18	1.18
50	TC	Btu/h	10007	9259	8885	12914	12607	12453	18729	19303	19589	23090	24324	24942
	S/T	-	0.625	0.722	0.771	0.447	0.514	0.547	0.317	0.357	0.377	0.267	0.292	0.305
	CMPR	W	1.20	1.21	1.22	1.19	1.20	1.20	1.16	1.17	1.17	1.15	1.14	1.14
40	TC	Btu/h	10812	9765	9242	13577	13049	12784	19108	19615	19869	23256	24540	25182
	S/T	-	0.627	0.712	0.755	0.448	0.507	0.536	0.315	0.352	0.371	0.262	0.288	0.301
	CMPR	W	1.17	1.20	1.21	1.16	1.18	1.19	1.13	1.13	1.14	1.11	1.10	1.10

DRC048 (4Tons) With DDC Control In Modulating Hot Gas Reheat Mode - High Stage

	EAT (DB) (OF)		75			75			75			75		
	EAT (WB) (OF)			62			64			68			71	
Ambient Temperature (oF)		CFM	1000	1450	1800	1000	1450	1800	1000	1450	1800	1000	1450	1800
95	TC	Btu/h	16671	16597	16540	19485	19712	19889	25114	25942	26586	29335	30614	31609
	S/T	-	0.37	0.20	0.07	0.30	0.17	0.08	0.16	0.12	0.09	0.05	0.08	0.10
	CMPR	W	2.95	2.95	2.95	2.98	2.99	3.00	3.06	3.08	3.09	3.11	3.14	3.16
85	TC	Btu/h	17727	17800	17857	21138	21641	22032	27959	29322	30383	33075	35084	36646
	S/T	-	0.34	0.39	0.43	0.29	0.33	0.36	0.19	0.22	0.24	0.12	0.13	0.14
	CMPR	W	2.63	2.63	2.62	2.67	2.67	2.67	2.74	2.76	1.12	2.80	2.82	2.84
80	TC	Btu/h	18255	18401	18515	21964	22605	23104	29382	31013	32281	34945	37318	39164
	S/T	-	0.32	0.48	0.61	0.28	0.41	0.51	0.21	0.27	0.31	0.15	0.16	0.17
	CMPR	W	2.47	2.47	2.46	2.51	2.51	2.51	2.58	2.60	2.61	2.64	2.67	2.68
70	TC	Btu/h	18265	18754	19135	22518	23527	24311	31025	33071	34663	37406	40230	42427
	S/T	-	0.34	0.49	0.61	0.30	0.42	0.51	0.23	0.29	0.33	0.17	0.19	0.20
	CMPR	W	2.44	2.44	2.44	2.45	2.46	2.46	2.48	2.49	2.50	2.51	2.52	2.54
65	TC	Btu/h	18270	18931	19445	22796	23988	24915	31847	34101	35854	38636	41686	44058
	S/T	-	0.35	0.49	0.61	0.31	0.43	0.52	0.24	0.30	0.34	0.19	0.20	0.21
	CMPR	W	2.42	2.42	2.42	2.43	2.43	2.43	2.43	2.44	2.45	2.44	2.45	2.46

DRC048 (4Tons) With DDC Control In Modulating Hot Gas Reheat Mode - Low Stage

	EAT (DB) (OF)		75			75			75			75		
	EAT (WB) (OF)			62			64			68			71	
Ambient Temperature (oF)		CFM	1000	1450	1800	1000	1450	1800	1000	1450	1800	1000	1450	1800
60	TC	Btu/h	13619	13130	12749	17286	17794	18189	24620	27123	29070	30121	34120	37230
	S/T	-	0.49	0.71	0.89	0.35	0.50	0.62	0.26	0.34	0.41	0.22	0.28	0.31
	CMPR	W	1.63	1.59	1.56	1.62	1.58	1.55	1.59	1.56	1.54	1.57	1.55	1.53
50	TC	Btu/h	14337	13758	13309	18028	18519	18901	25412	28040	30085	30949	35181	38473
	S/T	-	0.49	0.69	0.85	0.35	0.49	0.60	0.26	0.34	0.40	0.22	0.27	0.30
	CMPR	W	1.59	1.56	1.54	1.57	1.54	1.52	1.54	1.51	1.49	1.52	1.49	1.46
40	TC	Btu/h	15054	14387	13868	18770	19244	19612	26203	28957	31100	31777	36243	39716
	S/T	-	0.50	0.68	0.81	0.36	0.48	0.57	0.26	0.33	0.38	0.22	0.26	0.30
	CMPR	W	1.55	1.53	1.52	1.53	1.51	1.49	1.49	1.46	1.43	1.46	1.42	1.39

DRC060 (5 Tons) With DDC Control In Modulating Hot Gas Reheat Mode - High Stage

	EAT (DB) (OF)		75			75			75			75		
	EAT (WB) (OF)			62			64			68			71	
Ambient Temperature (oF)		CFM	1100	1500	2000	1100	1500	2000	1100	1500	2000	1100	1500	2000
95	TC	Btu/h	19401.0	21524.1	24178.0	22400.6	24650.1	27462.0	28399.7	30902.0	34030.0	32899.0	35591.0	38956.0
	S/T	-	0.40	0.52	0.68	0.32	0.42	0.55	0.17	0.22	0.28	0.06	0.07	0.08
	CMPR	W	3.54	3.54	3.56	3.57	3.58	3.59	3.63	3.64	3.66	3.68	3.69	3.72
85	TC	Btu/h	21831.7	23326.0	25194.0	25180.7	27053.1	29393.7	31878.8	34507.4	37793.1	36902.3	40098.0	44092.7
	S/T	-	0.39	0.50	0.63	0.33	0.42	0.52	0.21	0.25	0.30	0.12	0.12	0.14
	CMPR	W	3.24	3.22	3.20	3.26	3.25	3.24	3.30	3.31	3.31	3.33	3.35	3.37
80	TC	Btu/h	23047.0	24227.0	25702.0	26570.8	28254.7	30359.6	33618.3	36310.0	39674.7	38904.0	42351.6	46661.0
	S/T	-	0.39	0.49	0.61	0.33	0.41	0.51	0.23	0.26	0.31	0.14	0.15	0.16
	CMPR	W	3.09	3.06	3.02	3.11	3.09	3.06	3.13	3.14	3.14	3.15	3.17	3.20
70	TC	Btu/h	24811.7	25961.4	27398.7	28407.0	30140.6	32307.6	35597.7	38499.0	42125.6	40990.7	44767.7	49489.0
	S/T	-	0.41	0.49	0.59	0.35	0.42	0.50	0.25	0.28	0.32	0.17	0.18	0.19
	CMPR	W	3.03	3.03	3.02	3.05	3.05	3.04	3.08	3.09	3.10	3.10	3.12	3.14
65	TC	Btu/h	25694.0	26828.7	28247.0	29325.1	31083.6	33281.7	36587.3	39593.4	43351.0	42034.0	45975.8	50903.0
	S/T	-	0.42	0.49	0.58	0.36	0.42	0.49	0.26	0.29	0.32	0.18	0.19	0.20
	CMPR	W	3.01	3.01	3.01	3.02	3.03	3.04	3.05	3.07	3.08	3.08	3.09	3.11

DRC060 (5 Tons) With DDC Control In Modulating Hot Gas Reheat Mode - Low Stage

	EAT (DB) (OF)		75			75			75			75		
	EAT (WB) (OF)			62			64			68			71	
Ambient Temperature (oF)		CFM	1100	1500	2000	1100	1500	2000	1100	1500	2000	1100	1500	2000
60	TC	Btu/h	15070.0	15483.3	16000.0	18894.4	20264.8	21977.8	26543.3	29827.8	33933.3	32280.0	37000.0	42900.0
	S/T	-	0.54	0.66	0.81	0.39	0.47	0.58	0.28	0.33	0.39	0.24	0.27	0.31
	CMPR	W	2.16	2.11	2.04	2.15	2.10	2.03	2.12	2.08	2.02	2.11	2.07	2.02
50	TC	Btu/h	16395.0	17377.2	18605.0	20206.1	22023.9	24296.1	27828.3	31317.2	35678.3	33545.0	38287.2	44215.0
	S/T	-	0.58	0.68	0.82	0.41	0.48	0.58	0.28	0.33	0.39	0.23	0.26	0.30
	CMPR	W	2.07	2.03	1.99	2.05	2.02	1.98	2.03	2.00	1.96	2.01	1.98	1.94
40	TC	Btu/h	17720.0	19271.1	21210.0	21517.8	23783.0	26614.4	29113.3	32806.7	37423.3	34810.0	39574.4	45530.0
	S/T	-	0.61	0.70	0.82	0.43	0.49	0.58	0.28	0.33	0.38	0.22	0.25	0.29
	CMPR	W	1.97	1.96	1.94	1.96	1.94	1.92	1.94	1.92	1.89	1.92	1.89	1.86

DRC072 (6 Tons) With DDC Control In Modulating Hot Gas Reheat Mode - High Stage

	EAT (DB) (OF)		75			75			75			75		
	EAT (WB) (OF)			62			64			68			71	
Ambient Temperature (oF)		CFM	1380	1900	2400	1380	1900	2400	1380	1900	2400	1380	1900	2400
95	TC	Btu/h	26320	25606	24920	30609	30289	29982	39187	39656	40107	45620	46680	47700
	S/T	-	0.43	0.55	0.68	0.36	0.46	0.56	0.23	0.27	0.31	0.14	0.14	0.13
	CMPR	W	4.17	4.16	4.16	4.22	4.22	4.23	4.33	4.34	4.36	4.42	4.44	4.45
85	TC	Btu/h	28007	27456	26927	32493	32525	32556	41464	42663	43816	48193	50267	52260
	S/T	-	0.40	0.51	0.63	0.34	0.43	0.52	0.23	0.27	0.31	0.14	0.15	0.15
	CMPR	W	3.78	3.73	3.68	3.80	3.77	3.75	3.86	3.87	1.62	3.90	3.94	3.98
80	TC	Btu/h	28850	28381	27930	33434	33643	33843	42603	44167	45670	49480	52060	54540
	S/T	-	0.38	0.49	0.60	0.33	0.42	0.51	0.22	0.27	0.31	0.15	0.15	0.16
	CMPR	W	3.58	3.51	3.44	3.59	3.55	3.51	3.62	3.63	3.64	3.63	3.69	3.74
70	TC	Btu/h	32290	30686	29143	36778	36140	35526	45754	47048	48292	52487	55229	57867
	S/T	-	0.42	0.50	0.58	0.36	0.43	0.49	0.25	0.28	0.32	0.17	0.18	0.19
	CMPR	W	3.45	3.43	3.40	3.47	3.46	3.45	3.49	3.51	3.53	3.52	3.56	3.59
65	TC	Btu/h	34010	31838	29750	38450	37388	36368	47330	48489	49603	53990	56814	59530
	S/T	-	0.43	0.50	0.56	0.38	0.43	0.48	0.27	0.29	0.32	0.18	0.19	0.20
	CMPR	W	3.39	3.39	3.39	3.40	3.41	3.42	3.43	3.46	3.48	3.46	3.49	3.52

DRC072 (6 Tons) With DDC Control In Modulating Hot Gas Reheat Mode - Low Stage

	EAT (DB) (OF)		75			75			75			75		
	EAT (WB) (OF)			62			64			68			71	
Ambient Temperature (oF)		CFM	1380	1900	2400	1380	1900	2400	1380	1900	2400	1380	1900	2400
60	TC	Btu/h	25930	23391	20950	30481	28634	26859	39583	39121	38677	46410	46986	47540
	S/T	-	0.53	0.66	0.79	0.38	0.46	0.54	0.27	0.30	0.33	0.22	0.22	0.21
	CMPR	W	2.35	2.31	2.27	2.32	2.28	2.24	2.27	2.23	2.19	2.23	2.19	2.16
50	TC	Btu/h	28725	26528	24415	32784	31600	30462	40902	41745	42555	46990	49353	51625
	S/T	-	0.54	0.67	0.78	0.39	0.47	0.54	0.27	0.31	0.35	0.22	0.23	0.25
	CMPR	W	2.26	2.23	2.19	2.24	2.20	2.17	2.19	2.15	2.12	2.15	2.11	2.08
40	TC	Btu/h	31520	29664	27880	35087	34566	34064	42220	44368	46433	47570	51720	55710
	S/T	-	0.56	0.67	0.78	0.40	0.47	0.55	0.27	0.32	0.37	0.22	0.25	0.29
	CMPR	W	2.17	2.15	2.12	2.15	2.12	2.10	2.10	2.07	2.04	2.07	2.03	2.00

TC: Total Capacity
S/T: Sensible to Total Capacity Ratio
CMPR: Compressor Power Input

Electrical Data

Model Number	Electrical Rating	Compressor			Outdoor Fan Motor			Indoor Fan Motor			Optional Electric Heat			Optional Powered Convienience Outlet	Optional Power Exhaust	Power Supply	
		QTY	RLA	LRA	QTY	HP	FLA	Type	HP	FLA	Part #	KW*	FLA	FLA	FLA	MCA	MOP
DRC0361D	208/230/1/60	1	15.3	83	1	0.17	0.95	Direct-Drive Standard Static	0.75	5.7	-	-	-	-	-	26.2/26.2	40/40
											-	-	-	9.6/8.7	-	35.8/34.9	50/50
											-	-	-	-	1.7/1.5	27.9/27.7	40/40
											-	-	-	9.6/8.7	1.7/1.5	37.5/36.4	50/50
											EH*D-1S05	3.76/5.00	18.1/20.8	-	-	29.7/33.2	40/40
														9.6/8.7	-	41.7/44.0	50/50
														-	1.7/1.5	31.8/35.0	40/40
														9.6/8.7	1.7/1.5	43.8/45.9	50/50
											EH*D-1S10	7.51/10.0	36.1/41.7	-	-	52.3/59.2	60/60
														9.6/8.7	-	64.3/70.1	70/80
														-	1.7/1.5	54.4/61.1	60/70
														9.6/8.7	1.7/1.5	66.4/72.0	70/80
											EH*D-1S16	11.3/15.0	54.2/62.5	-	-	74.8/85.3	80/90
														9.6/8.7	-	86.8/96.1	90/100
														-	1.7/1.5	77.0/87.1	80/90
														9.6/8.7	1.7/1.5	89.0/98.0	90/100
DRC0363D	208/230/3/60	1	11.6	73	1	0.17	0.95	Direct-Drive Standard Static	0.75	5.7	-	-	-	-	-	21.2/21.2	30/30
											-	-	-	9.6/8.7	-	30.8/29.9	40/40
											-	-	-	-	1.7/1.5	22.9/22.7	30/30
											-	-	-	9.6/8.7	1.7/1.5	32.5/31.4	40/40
											EH*D-3S05	3.76/5.00	10.4/12.0	-	-	21.2/22.2	30/30
														9.6/8.7	-	32.2/33.0	40/40
														-	1.7/1.5	22.9/24.0	30/30
														9.6/8.7	1.7/1.5	34.3/34.9	40/40
											EH*D-3S10	7.51/10.0	20.8/24.1	-	-	33.2/37.2	35/40
														9.6/8.7	-	45.2/48.1	50/50
														-	1.7/1.5	35.3/39.1	40/40
														9.6/8.7	1.7/1.5	47.3/49.9	50/50
											EH*D-3S16	11.3/15.0	31.3/36.1	-	-	46.2/52.2	50/60
														9.6/8.7	-	58.2/63.1	60/70
														-	1.7/1.5	48.3/54.1	50/60
														9.6/8.7	1.7/1.5	60.3/65.0	70/70
DRC0363W	208/230/3/60	1	11.6	73	1	0.17	0.95	Direct-Drive High-Static	1.2	5	-	-	-	-	-	20.5/20.5	30/30
											-	-	-	9.6/8.7	-	30.1/29.2	40/40
											-	-	-	-	1.7/1.5	22.2/22.0	30/30
											-	-	-	9.6/8.7	1.7/1.5	31.8/30.7	40/40
											EH*D-3S05	3.76/5.00	10.4/12.0	-	-	20.5/21.3	30/30
														9.6/8.7	-	31.3/32.2	40/40
														-	1.7/1.5	22.2/23.2	30/30
														9.6/8.7	1.7/1.5	33.4/34.0	40/40
											EH*D-3S10	7.51/10.0	20.8/24.1	-	-	32.3/36.3	35/40
														9.6/8.7	-	44.3/47.2	45/50
														-	1.7/1.5	34.4/38.2	35/40
														9.6/8.7	1.7/1.5	46.4/49.1	50/50
											EH*D-3S15	11.3/15.0	31.3/36.1	-	-	45.3/51.4	50/60
														9.6/8.7	-	57.3/62.2	60/70
														-	1.7/1.5	47.5/53.2	50/60
														9.6/8.7	1.7/1.5	59.5/64.1	60/70
DRC0364D	460/3/60	1	5.7	38	1	0.17	0.48	Direct-Drive Standard Static	1.2	2.5	-	-	-	-	-	10.1	15
											-	-	-	4.3	-	14.4	20
											-	-	-	-	0.5	10.6	15
											-	-	-	4.3	0.5	14.9	20
											EH*D-4S05	5	6.01	-	-	10.6	15
														4.3	-	16	20
														-	0.5	11.3	15
														4.3	0.5	16.6	20
											EH*D-4S10	10	12	-	-	18.2	20
														4.3	-	23.5	25
														-	0.5	18.8	20
														4.3	0.5	24.2	25
											EH*D-4S16	15	18	-	-	25.7	30
														4.3	-	31.1	35
														-	0.5	26.3	30
														4.3	0.5	31.7	35

Electrical Data

Model Number	Electrical Rating	Compressor			Outdoor Fan Motor			Indoor Fan Motor			Optional Electric Heat			Optional Powered Convienience Outlet	Optional Power Exhaust	Power Supply	
		QTY	RLA	LRA	QTY	HP	FLA	Type	HP	FLA	Part #	KW*	FLA	FLA	FLA	MCA	MOP
DRC0364W	460/3/60	1	5.7	38	1	0.17	0.48	Direct-Drive High-Static	1.2	2.5	-	-	-	-	-	10.1	15
											-	-	-	4.3	-	14.4	20
											-	-	-	-	0.5	10.6	15
											-	-	-	4.3	0.5	14.9	20
											EH*D-4S05	5	6.01	-	-	10.6	15
														4.3	-	16	20
														-	0.5	11.3	15
														4.3	0.5	16.6	20
											EH*D-4S10	10	12	-	-	18.2	20
														4.3	-	23.5	25
														-	0.5	18.8	20
														4.3	0.5	24.2	25
											EH*D-4S15	15	18	-	-	25.7	30
														4.3	-	31.1	35
														-	0.5	26.3	30
														4.3	0.5	31.7	35
DRC0367D	575/3/60	1	4	25.6	1	0.17	0.39	Direct-Drive Standard Static	1.2	2	-	-	-	-	-	7.36	15
											-	-	-	3.5	-	10.9	15
											-	-	-	-	0.6	7.96	15
											-	-	-	3.5	0.6	11.5	15
											EH*D-7S05	5	4.81	-	-	8.51	15
														3.5	-	12.9	15
														-	0.6	9.26	15
														3.5	0.6	13.6	15
											EH*D-7S10	10	9.62	-	-	14.5	15
														3.5	-	18.9	20
														-	0.6	15.3	20
														3.5	0.6	19.7	20
											EH*D-7S16	15	14.4	-	-	20.5	25
														3.5	-	24.9	25
														-	0.6	21.3	25
														3.5	0.6	25.7	30
DRC0367W	575/3/60	1	4	25.6	1	0.17	0.39	Direct-Drive High-Static	1.2	2	-	-	-	-	-	7.36	15
											-	-	-	3.5	-	10.9	15
											-	-	-	-	0.6	7.96	15
											-	-	-	3.5	0.6	11.5	15
											EH*D-7S05	5	4.81	-	-	8.51	15
														3.5	-	12.9	15
														-	0.6	9.26	15
														3.5	0.6	13.6	15
											EH*D-7S10	10	9.62	-	-	14.5	15
														3.5	-	18.9	20
														-	0.6	15.3	20
														3.5	0.6	19.7	20
											EH*D-7S15	15	14.4	-	-	20.5	25
														3.5	-	24.9	25
														-	0.6	21.3	25
														3.5	0.6	25.7	30
DRC0481D	208/230/1/60	1	21.2	104	1	0.17	0.95	Direct-Drive Standard Static	1	6.9	-	-	-	-	-	34.3/34.3	50/50
											-	-	-	9.6/8.7	-	43.9/43.0	60/60
											-	-	-	-	1.7/1.5	36.0/35.8	50/50
											-	-	-	9.6/8.7	1.7/1.5	45.6/44.5	60/60
											EH*D-1S05	3.8/5.00	18.1/20.8	-	-	34.3/34.7	50/50
														9.6/8.7	-	43.9/45.5	60/60
														-	1.7/1.5	36.0/36.5	50/50
														9.6/8.7	1.7/1.5	45.6/47.4	60/60
											EH*D-1S10	7.50/10.0	36.1/41.7	-	-	53.8/60.7	60/70
														9.6/8.7	-	65.8/71.6	70/80
															1.7/1.5	55.9/62.6	60/70
														9.6/8.7	1.7/1.5	67.9/73.5	70/80
											EH*D-1S15	11.3/15.0	54.2/62.5	-	-	76.3/86.8	80/90
														9.6/8.7	-	88.3/97.6	90/100
														-	1.7/1.5	78.5/88.6	80/90
														9.6/8.7	1.7/1.5	90.5/99.5	100/100
											EH*D-1S22	15.0/20.0	72.2/83.3	-	-	98.9/113	100/125
														9.6/8.7	-	111/124	125/125
														-	1.7/1.5	101/115	110/125
														9.6/8.7	1.7/1.5	113/126	125/150

Electrical Data

Model Number	Electrical Rating	Compressor			Outdoor Fan Motor			Indoor Fan Motor			Optional Electric Heat			Optional Powered Convienience Outlet	Optional Power Exhaust	Power Supply	
		QTY	RLA	LRA	QTY	HP	FLA	Type	HP	FLA	Part #	KW*	FLA	FLA	FLA	MCA	MOP
DRC0483D	208/230/3/60	1	14	83.1	1	0.17	0.95	Direct-Drive Standard Static	1	6.9	-	-	-	-	-	25.4/25.4	35/35
											-	-	-	9.6/8.7	-	35.0/34.1	45/45
											-	-	-	-	1.7/1.5	27.1/26.9	35/35
											-	-	-	9.6/8.7	1.7/1.5	36.7/35.6	45/45
											EH*D-3S05	3.76/5.00	10.4/12.0	-	-	25.4/25.4	35/35
														9.6/8.7	-	35.0/34.5	45/45
														-	1.7/1.5	27.1/26.9	35/35
														9.6/8.7	1.7/1.5	36.7/36.4	45/45
											EH*D-3S10	7.51/10.0	20.8/24.1	-	-	34.7/38.7	35/40
														9.6/8.7	-	46.7/49.6	50/50
														-	1.7/1.5	36.8/40.6	40/45
														9.6/8.7	1.7/1.5	48.8/51.4	50/60
											EH*D-3S15	11.3/15.0	31.3/36.1	-	-	47.7/53.7	50/60
														9.6/8.7	-	59.7/64.6	60/70
														-	1.7/1.5	49.8/55.6	50/60
														9.6/8.7	1.7/1.5	61.8/66.5	70/70
											EH*D-3S22	15.0/19.9	41.5/47.9	-	-	60.5/68.5	70/70
														9.6/8.7	-	72.5/79.3	80/80
														-	1.7/1.5	62.6/70.3	70/80
														9.6/8.7	1.7/1.5	74.6/81.2	80/90
DRC0483W	208/230/3/60	1	14	83.1	1	0.17	0.95	Direct-Drive High-Static	1.2	5	-	-	-	-	-	23.5/23.5	35/35
											-	-	-	9.6/8.7	-	33.1/32.2	45/45
											-	-	-	-	1.7/1.5	25.2/25.0	35/35
											-	-	-	9.6/8.7	1.7/1.5	34.8/33.7	45/45
											EH*D-3S05	3.76/5.00	10.4/12.0	-	-	23.5/23.5	35/35
														9.6/8.7	-	33.1/32.2	45/45
														-	1.7/1.5	25.2/25.0	35/35
														9.6/8.7	1.7/1.5	34.8/34.0	45/45
											EH*D-3S10	7.51/10.0	20.8/24.1	-	-	32.3/36.3	35/40
														9.6/8.7	-	44.3/47.2	45/50
														-	1.7/1.5	34.4/38.2	35/40
														9.6/8.7	1.7/1.5	46.4/49.1	50/50
											EH*D-3S15	11.3/15.0	31.3/36.1	-	-	45.3/51.4	50/60
														9.6/8.7	-	57.3/62.2	60/70
														-	1.7/1.5	47.5/53.2	50/60
														9.6/8.7	1.7/1.5	59.5/64.1	60/70
											EH*D-3S21	15.0/19.9	41.5/47.9	-	-	58.1/66.1	60/70
														9.6/8.7	-	70.1/77.0	80/80
														-	1.7/1.5	60.2/68.0	70/70
														9.6/8.7	1.7/1.5	72.2/78.8	80/80
DRC0484D	460/3/60	1	6.4	41	1	0.17	0.48	Direct-Drive Standard Static	1.2	2.5	-	-	-	-	-	11	15
											-	-	-	4.3	-	15.3	20
											-	-	-	-	0.5	11.5	15
											-	-	-	4.3	0.5	15.8	20
											EH*D-4S05	5	6.01	-	-	11	15
														4.3	-	16	20
														-	0.5	11.5	15
														4.3	0.5	16.6	20
											EH*D-4S10	10	12	-	-	18.2	20
														4.3	-	23.5	25
														-	0.5	18.8	20
														4.3	0.5	24.2	25
											EH*D-4S15	15	18	-	-	25.7	30
														4.3	-	31.1	35
														-	0.5	26.3	30
														4.3	0.5	31.7	35
											EH*D-4S22	20	24.1	-	-	33.2	35
														4.3	-	38.6	40
														-	0.5	33.8	35
														4.3	0.5	39.2	40

Electrical Data

Model Number	Electrical Rating	Compressor			Outdoor Fan Motor			Indoor Fan Motor			Optional Electric Heat			Optional Powered Convienience Outlet	Optional Power Exhaust	Power Supply	
		QTY	RLA	LRA	QTY	HP	FLA	Type	HP	FLA	Part #	KW*	FLA	FLA	FLA	MCA	MOP
DRC0484W	460/3/60	1	6.4	41	1	0.17	0.48	Direct-Drive High-Static	1.2	2.5	-	-	-	-	-	11	15
											-	-	-	4.3	-	15.3	20
											-	-	-	-	0.5	11.5	15
											-	-	-	4.3	0.5	15.8	20
											EH*D-4S05	5	6.01	-	-	11	15
														4.3	-	16	20
														-	0.5	11.5	15
														4.3	0.5	16.6	20
											EH*D-4S10	10	12	-	-	18.2	20
														4.3	-	23.5	25
														-	0.5	18.8	20
														4.3	0.5	24.2	25
											EH*D-4S15	15	18	-	-	25.7	30
														4.3	-	31.1	35
														-	0.5	26.3	30
														4.3	0.5	31.7	35
											EH*D-4S21	20	24.1	-	-	33.2	35
														4.3	-	38.6	40
														-	0.5	33.8	35
														4.3	0.5	39.2	40
DRC0487D	575/3/60	1	4.6	33	1	0.17	0.39	Direct-Drive Standard Static	1.2	2	-	-	-	-	-	8.08	15
											-	-	-	3.5	-	11.6	15
											-	-	-	-	0.6	8.68	15
											-	-	-	3.5	0.6	12.2	15
											EH*D-7S05	5	4.81	-	-	8.51	15
														3.5	-	12.9	15
														-	0.6	9.26	15
														3.5	0.6	13.6	15
											EH*D-7S10	10	9.62	-	-	14.5	15
														3.5	-	18.9	20
														-	0.6	15.3	20
														3.5	0.6	19.7	20
											EH*D-7S15	15	14.4	-	-	20.5	25
														3.5	-	24.9	25
														-	0.6	21.3	25
														3.5	0.6	25.7	30
											EH*D-7S22	20	19.2	-	-	26.6	30
														3.5	-	30.9	35
														-	0.6	27.3	30
														3.5	0.6	31.7	35
DRC0487W	575/3/60	1	4.6	33	1	0.17	0.39	Direct-Drive High-Static	1.2	2	-	-	-	-	-	8.08	15
											-	-	-	3.5	-	11.6	15
											-	-	-	-	0.6	8.68	15
											-	-	-	3.5	0.6	12.2	15
											EH*D-7S05	5	4.81	-	-	8.51	15
														3.5	-	12.9	15
														-	0.6	9.26	15
														3.5	0.6	13.6	15
											EH*D-7S10	10	9.62	-	-	14.5	15
														3.5	-	18.9	20
														-	0.6	15.3	20
														3.5	0.6	19.7	20
											EH*D-7S15	15	14.4	-	-	20.5	25
														3.5	-	24.9	25
														-	0.6	21.3	25
														3.5	0.6	25.7	30
											EH*D-7S21	20	19.2	-	-	26.6	30
														3.5	-	30.9	35
														-	0.6	27.3	30
														3.5	0.6	31.7	35

Electrical Data

Model Number	Electrical Rating	Compressor			Outdoor Fan Motor			Indoor Fan Motor			Optional Electric Heat			Optional Powered Convienience Outlet	Optional Power Exhaust	Power Supply	
		QTY	RLA	LRA	QTY	HP	FLA	Type	HP	FLA	Part #	KW*	FLA	FLA	FLA	MCA	MOP
DRC0601D	208/230/1/60	1	26.9	139.9	1	0.33	2.6	Direct-Drive Standard Static	1	6.9	-	-	-	-	-	43.2/43.2	70/70
											-	-	-	9.6/8.7	-	52.8/51.9	70/70
											-	-	-	-	1.7/1.5	44.9/44.7	70/70
											-	-	-	9.6/8.7	1.7/1.5	54.5/53.4	70/70
											EH*D-1S05	3.8/5.00	18.1/20.8	-	-	43.2/43.2	70/70
														9.6/8.7	-	52.8/51.9	70/70
														-	1.7/1.5	44.9/44.7	70/70
														9.6/8.7	1.7/1.5	54.5/53.4	70/70
											EH*D-1S10	7.5/10.0	36.1/41.7	-	-	53.8/60.7	70/70
														9.6/8.7	-	65.8/71.6	70/80
															1.7/1.5	55.9/62.6	70/70
														9.6/8.7	1.7/1.5	67.9/73.5	70/80
											EH*D-1S15	11.3/15.0	54.2/62.5	-	-	76.3/86.8	80/90
														9.6/8.7	-	88.3/97.6	90/100
														-	1.7/1.5	78.5/88.6	80/90
														9.6/8.7	1.7/1.5	90.5/99.5	100/100
											EH*D-1S22	15.0/20.0	72.2/83.3	-	-	98.9/113	100/125
														9.6/8.7	-	111/124	125/125
														-	1.7/1.5	101/115	110/125
														9.6/8.7	1.7/1.5	113/126	125/150
DRC0603D	208/230/3/60	1	16.2	110	1	0.33	2.6	Direct-Drive Standard Static	1	6.9	-	-	-	-	-	29.8/29.8	45/45
											-	-	-	9.6/8.7	-	39.4/38.5	50/50
											-	-	-	-	1.7/1.5	31.5/31.3	45/45
											-	-	-	9.6/8.7	1.7/1.5	41.1/40.0	50/50
											EH*D-3S05	3.76/5.00	10.4/12.0	-	-	29.8/29.8	45/45
														9.6/8.7	-	39.4/38.5	50/50
														-	1.7/1.5	31.5/31.3	45/45
														9.6/8.7	1.7/1.5	41.1/40.0	50/50
											EH*D-3S10	7.51/10.0	20.8/24.1	-	-	34.7/38.7	45/45
														9.6/8.7	-	46.7/49.6	50/50
														-	1.7/1.5	36.8/40.6	45/45
														9.6/8.7	1.7/1.5	48.8/51.4	50/60
											EH*D-3S15	11.3/15.0	31.3/36.1	-	-	47.7/53.7	50/60
														9.6/8.7	-	59.7/64.6	60/70
														-	1.7/1.5	49.8/55.6	50/60
														9.6/8.7	1.7/1.5	61.8/66.5	70/70
											EH*D-3S22	15.0/19.9	41.5/47.9	-	-	60.5/68.5	70/70
														9.6/8.7	-	72.5/79.3	80/80
														-	1.7/1.5	62.6/70.3	70/80
														9.6/8.7	1.7/1.5	74.6/81.2	80/90
DRC0603W	208/230/3/60	1	16.2	110	1	0.33	2.6	Direct-Drive High-Static	2.3	7.7	-	-	-	-	-	30.6/30.6	45/45
											-	-	-	9.6/8.7	-	40.2/39.3	50/50
											-	-	-	-	1.7/1.5	32.3/32.1	45/45
											-	-	-	9.6/8.7	1.7/1.5	41.9/40.8	50/50
											EH*D-3S05	3.76/5.00	10.4/12.0	-	-	30.6/30.6	45/45
														9.6/8.7	-	40.2/39.3	50/50
														-	1.7/1.5	32.3/32.1	45/45
														9.6/8.7	1.7/1.5	41.9/40.8	50/50
											EH*D-3S10	7.51/10.0	20.8/24.1	-	-	35.7/39.7	45/45
														9.6/8.7	-	47.7/50.6	50/60
														-	1.7/1.5	37.8/41.6	45/45
														9.6/8.7	1.7/1.5	49.8/52.4	50/60
											EH*D-3S15	11.3/15.0	31.3/36.1	-	-	48.7/54.7	50/60
														9.6/8.7	-	60.7/65.6	70/70
														-	1.7/1.5	50.8/56.6	60/60
														9.6/8.7	1.7/1.5	62.8/67.5	70/70
											EH*D-3S20	15.0/19.9	41.5/47.9	-	-	61.5/69.5	70/70
														9.6/8.7	-	73.5/80.3	80/90
														-	1.7/1.5	63.6/71.3	70/80
														9.6/8.7	1.7/1.5	75.6/82.2	80/90

Electrical Data

Model Number	Electrical Rating	Compressor			Outdoor Fan Motor			Indoor Fan Motor			Optional Electric Heat			Optional Powered Convienience Outlet	Optional Power Exhaust	Power Supply	
		QTY	RLA	LRA	QTY	HP	FLA	Type	HP	FLA	Part #	KW*	FLA	FLA	FLA	MCA	MOP
DRC0604D	460/3/60	1	7.6	52	1	0.33	1.6	Direct-Drive Standard Static	1.2	2.5	-	-	-	-	-	13.6	20
											-	-	-	4.3	-	17.9	25
											-	-	-	-	0.5	14.1	20
											-	-	-	4.3	0.5	18.4	25
											EH*D-4S05	5	6.01	-	-	13.6	20
														4.3	-	17.9	25
														-	0.5	14.1	20
														4.3	0.5	18.4	25
											EH*D-4S10	10	12	-	-	18.2	20
														4.3	-	23.5	25
														-	0.5	18.8	20
														4.3	0.5	24.2	25
											EH*D-4S15	15	18	-	-	25.7	30
														4.3	-	31.1	35
														-	0.5	26.3	30
														4.3	0.5	31.7	35
											EH*D-4S22	20	24.1	-	-	33.2	35
														4.3	-	38.6	40
														-	0.5	33.8	35
														4.3	0.5	39.2	40
DRC0604W	460/3/60	1	7.6	52	1	0.33	1.6	Direct-Drive High-Static	2.3	4.5	-	-	-	-	-	15.6	20
											-	-	-	4.3	-	19.9	25
											-	-	-	-	0.5	16.1	20
											-	-	-	4.3	0.5	20.4	25
											EH*D-4S05	5	6.01	-	-	15.6	20
														4.3	-	19.9	25
														-	0.5	16.1	20
														4.3	0.5	20.4	25
											EH*D-4S10	10	12	-	-	20.7	25
														4.3	-	26	30
														-	0.5	21.3	25
														4.3	0.5	26.7	30
											EH*D-4S15	15	18	-	-	28.2	30
														4.3	-	33.6	35
														-	0.5	28.8	30
														4.3	0.5	34.2	35
											EH*D-4S20	20	24.1	-	-	35.7	40
														4.3	-	41.1	45
														-	0.5	36.3	40
														4.3	0.5	41.7	45
DRC0607D	575/3/60	1	5.3	38.9	1	0.33	2.6	Direct-Drive Standard Static	1.2	2	-	-	-	-	-	11.3	15
											-	-	-	3.5	-	14.8	20
											-	-	-	-	0.6	11.9	15
											-	-	-	3.5	0.6	15.4	20
											EH*D-7S05	5	4.81	-	-	11.3	15
														3.5	-	14.8	20
														-	0.6	11.9	15
														3.5	0.6	15.4	20
											EH*D-7S10	10	9.62	-	-	14.5	15
														3.5	-	18.9	20
														-	0.6	15.3	20
														3.5	0.6	19.7	20
											EH*D-7S15	15	14.4	-	-	20.5	25
														3.5	-	24.9	25
														-	0.6	21.3	25
														3.5	0.6	25.7	30
											EH*D-7S22	20	19.2	-	-	26.6	30
														3.5	-	30.9	35
														-	0.6	27.3	30
														3.5	0.6	31.7	35

Electrical Data

Model Number	Electrical Rating	Compressor			Outdoor Fan Motor			Indoor Fan Motor			Optional Electric Heat			Optional Powered Convienience Outlet	Optional Power Exhaust	Power Supply	
		QTY	RLA	LRA	QTY	HP	FLA	Type	HP	FLA	Part #	KW*	FLA	FLA	FLA	MCA	MOP
DRC0607W	575/3/60	1	5.3	38.9	1	0.33	2.6	Direct-Drive High-Static	2.3	3.8	-	-	-	-	-	13.1	15
											-	-	-	3.5	-	16.6	20
											-	-	-	-	0.6	13.7	15
											-	-	-	3.5	0.6	15.7	20
											EH*D-7S05	5	4.81	-	-	13.1	15
														3.5	-	16.6	20
														-	0.6	13.7	15
														3.5	0.6	17.2	20
											EH*D-7S10	10	9.62	-	-	16.8	20
														3.5	-	21.2	25
														-	0.6	17.5	20
														3.5	0.6	21.9	25
											EH*D-7S15	15	14.4	-	-	22.8	25
														3.5	-	27.2	30
														-	0.6	23.5	25
														3.5	0.6	27.9	30
											EH*D-7S20	20	19.2	-	-	28.8	30
														3.5	-	33.2	35
														-	0.6	29.6	30
														3.5	0.6	33.9	35
DRC0723D	208/230/3/60	1	17.6	136	1	0.33	2	Direct-Drive Standard Static	1.2	5	-	-	-	-	-	29.0/29.0	45/45
											-	-	-	9.6/8.7	-	38.6/37.7	50/50
											-	-	-	-	1.7/1.5	30.7/30.5	45/45
											-	-	-	9.6/8.7	1.7/1.5	40.3/39.2	50/50
											EH*D-3S05	3.76/5.00	10.4/12.0	-	-	29.0/29.0	45/45
														9.6/8.7	-	38.6/37.7	50/50
														-	1.7/1.5	30.7/30.5	45/45
														9.6/8.7	1.7/1.5	40.3/39.2	50/50
											EH*D-3S10	7.51/10.0	20.8/24.1	-	-	32.3/36.3	45/45
														9.6/8.7	-	44.3/47.2	50/50
														-	1.7/1.5	34.4/38.2	45/45
														9.6/8.7	1.7/1.5	46.4/49.1	50/50
											EH*D-3S15	11.3/15.0	31.3/36.1	-	-	45.3/51.4	50/60
														9.6/8.7	-	57.3/62.2	60/70
														-	1.7/1.5	47.5/53.2	50/60
														9.6/8.7	1.7/1.5	59.5/64.1	60/70
											EH*D-3S21	15.0/19.9	41.5/47.9	-	-	58.1/66.1	60/70
														9.6/8.7	-	70.1/77.0	80/80
														-	1.7/1.5	60.2/68.0	70/70
														9.6/8.7	1.7/1.5	72.2/78.8	80/80
											EH*D-3S31	21.6/28.8	60.0/69.3	-	-	81.3/92.9	90/100
														9.6/8.7	-	93.3/104	100/110
														-	1.7/1.5	83.4/94.7	90/100
														9.6/8.7	1.7/1.5	95.4/106	100/110
DRC0723W	208/230/3/60	1	17.6	136	1	0.33	2	Direct-Drive High-Static	2.3	7.7	-	-	-	-	-	31.7/31.7	45/45
											-	-	-	9.6/8.7	-	41.3/40.4	50/50
											-	-	-	-	1.7/1.5	33.4/33.2	45/45
											-	-	-	9.6/8.7	1.7/1.5	43.0/41.9	50/50
											EH*D-3S05	3.76/5.00	10.4/12.0	-	-	31.7/31.7	45/45
														9.6/8.7	-	41.3/40.4	50/50
														-	1.7/1.5	33.4/33.2	45/45
														9.6/8.7	1.7/1.5	43.0/41.9	50/50
											EH*D-3S10	7.51/10.0	20.8/24.1	-	-	35.7/39.7	45/45
														9.6/8.7	-	47.7/50.6	50/60
														-	1.7/1.5	37.8/41.6	45/45
														9.6/8.7	1.7/1.5	49.8/52.4	50/60
											EH*D-3S15	11.3/15.0	31.3/36.1	-	-	48.7/54.7	50/60
														9.6/8.7	-	60.7/65.6	70/70
														-	1.7/1.5	50.8/56.6	60/60
														9.6/8.7	1.7/1.5	62.8/67.5	70/70
											EH*D-3S20	15.0/19.9	41.5/47.9	-	-	61.5/69.5	70/70
														9.6/8.7	-	73.5/80.3	80/90
														-	1.7/1.5	63.6/71.3	70/80
														9.6/8.7	1.7/1.5	75.6/82.2	80/90
											EH*D-3S30	21.6/28.8	60.0/69.3	-	-	84.7/96.2	90/100
														9.6/8.7	-	96.7/107	100/110
														-	1.7/1.5	86.8/98.1	90/100
														9.6/8.7	1.7/1.5	98.8/109	100/110

Electrical Data

Model Number	Electrical Rating	Compressor			Outdoor Fan Motor			Indoor Fan Motor			Optional Electric Heat			Optional Powered Convienience Outlet	Optional Power Exhaust	Power Supply	
		QTY	RLA	LRA	QTY	HP	FLA	Type	HP	FLA	Part #	KW*	FLA	FLA	FLA	MCA	MOP
DRC0724D	460/3/60	1	8.5	66.1	1	0.33	0.85	Direct-Drive Standard Static	1.2	2.5	-	-	-	-	-	13.9	20
											-	-	-	4.3	-	18.2	25
											-	-	-	-	0.5	14.4	20
											-	-	-	4.3	0.5	18.7	25
											EH*D-4S05	5	6.01	-	-	13.9	20
														4.3	-	18.2	25
														-	0.5	14.4	20
														4.3	0.5	18.7	25
											EH*D-4S10	10	12	-	-	18.2	20
														4.3	-	23.5	25
														-	0.5	18.8	20
														4.3	0.5	24.2	25
											EH*D-4S15	15	18	-	-	25.7	30
														4.3	-	31.1	35
														-	0.5	26.3	30
														4.3	0.5	31.7	35
											EH*D-4S21	20	24.1	-	-	33.2	35
														4.3	-	38.6	40
														-	0.5	33.8	35
														4.3	0.5	39.2	40
											EH*D-4S31	30	36.1	-	-	48.2	50
														4.3	-	53.6	60
														-	0.5	48.9	50
														4.3	0.5	54.2	60
DRC0724W	460/3/60	1	8.5	66.1	1	0.33	0.85	Direct-Drive High-Static	2.3	4.5	-	-	-	-	-	15.9	20
											-	-	-	4.3	-	20.2	25
											-	-	-	-	0.5	16.4	20
											-	-	-	4.3	0.5	20.7	25
											EH*D-4S05	5	6.01	-	-	15.9	20
														4.3	-	20.2	25
														-	0.5	16.4	20
														4.3	0.5	20.7	25
											EH*D-4S10	10	12	-	-	20.7	25
														4.3	-	26	30
														-	0.5	21.3	25
														4.3	0.5	26.7	30
											EH*D-4S15	15	18	-	-	28.2	30
														4.3	-	33.6	35
														-	0.5	28.8	30
														4.3	0.5	34.2	35
											EH*D-4S20	20	24.1	-	-	35.7	40
														4.3	-	41.1	45
														-	0.5	36.3	40
														4.3	0.5	41.7	45
											EH*D-4S30	30	36.1	-	-	50.7	60
														4.3	-	56.1	60
														-	0.5	51.4	60
														4.3	0.5	56.7	60

Electrical Data

Model Number	Electrical Rating	Compressor			Outdoor Fan Motor			Indoor Fan Motor			Optional Electric Heat			Optional Powered Convienience Outlet	Optional Power Exhaust	Power Supply	
		QTY	RLA	LRA	QTY	HP	FLA	Type	HP	FLA	Part #	KW*	FLA	FLA	FLA	MCA	MOP
DRC0727D	575/3/60	1	6.3	55.3	1	0.33	0.67	Direct-Drive Standard Static	1.2	2	-	-	-	-	-	10.6	15
											-	-	-	3.5	-	14.1	20
											-	-	-	-	0.6	11.2	15
											-	-	-	3.5	0.6	14.7	20
											EH*D-7S05	5	4.81	-	-	10.6	15
														3.5	-	14.1	20
														-	0.6	11.2	15
														3.5	0.6	14.7	20
											EH*D-7S10	10	9.62	-	-	14.5	15
														3.5	-	18.9	20
														-	0.6	15.3	20
														3.5	0.6	19.7	20
											EH*D-7S15	15	14.4	-	-	20.5	25
														3.5	-	24.9	25
														-	0.6	21.3	25
														3.5	0.6	25.7	30
											EH*D-7S21	20	19.2	-	-	26.6	30
														3.5	-	30.9	35
														-	0.6	27.3	30
														3.5	0.6	31.7	35
											EH*D-7S31	30	28.9	-	-	38.6	40
														3.5	-	43	45
														-	0.6	39.3	40
														3.5	0.6	43.7	45
DRC0727W	575/3/60	1	6.3	55.3	1	0.33	0.67	Direct-Drive High-Static	2.3	3.8	-	-	-	-	-	12.4	15
											-	-	-	3.5	-	15.9	20
											-	-	-	-	0.6	13	15
											-	-	-	3.5	0.6	16.5	20
											EH*D-7S05	5	4.81	-	-	12.4	15
														3.5	-	15.9	20
														-	0.6	13	15
														3.5	0.6	16.5	20
											EH*D-7S10	10	9.62	-	-	16.8	20
														3.5	-	21.2	25
														-	0.6	17.5	20
														3.5	0.6	21.9	25
											EH*D-7S15	15	14.4	-	-	22.8	25
														3.5	-	27.2	30
														-	0.6	23.5	25
														3.5	0.6	27.9	30
											EH*D-7S20	20	19.2	-	-	28.8	30
														3.5	-	33.2	35
														-	0.6	29.6	30
														3.5	0.6	33.9	35
											EH*D-7S30	30	28.9	-	-	40.8	45
														3.5	-	45.2	50
														-	0.6	41.6	45
														3.5	0.6	46	50

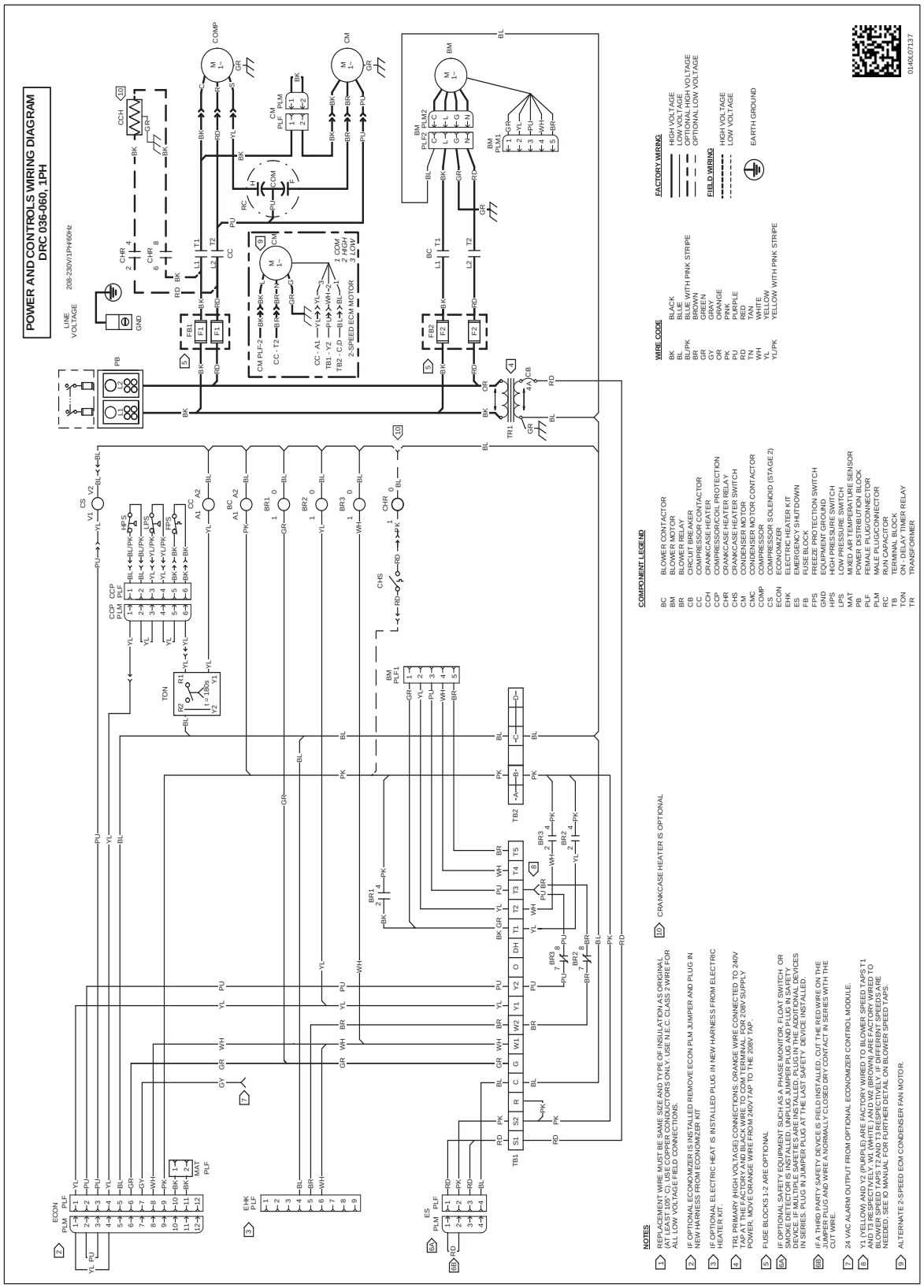

Wiring is subject to change. Always refer to the wiring diagram on the unit for the most up-to-date wiring.

WARNING

High Voltage: Disconnect all power before servicing or installing this unit. Multiple power sources may be present. Failure to do so may cause property damage, personal injury, or death.

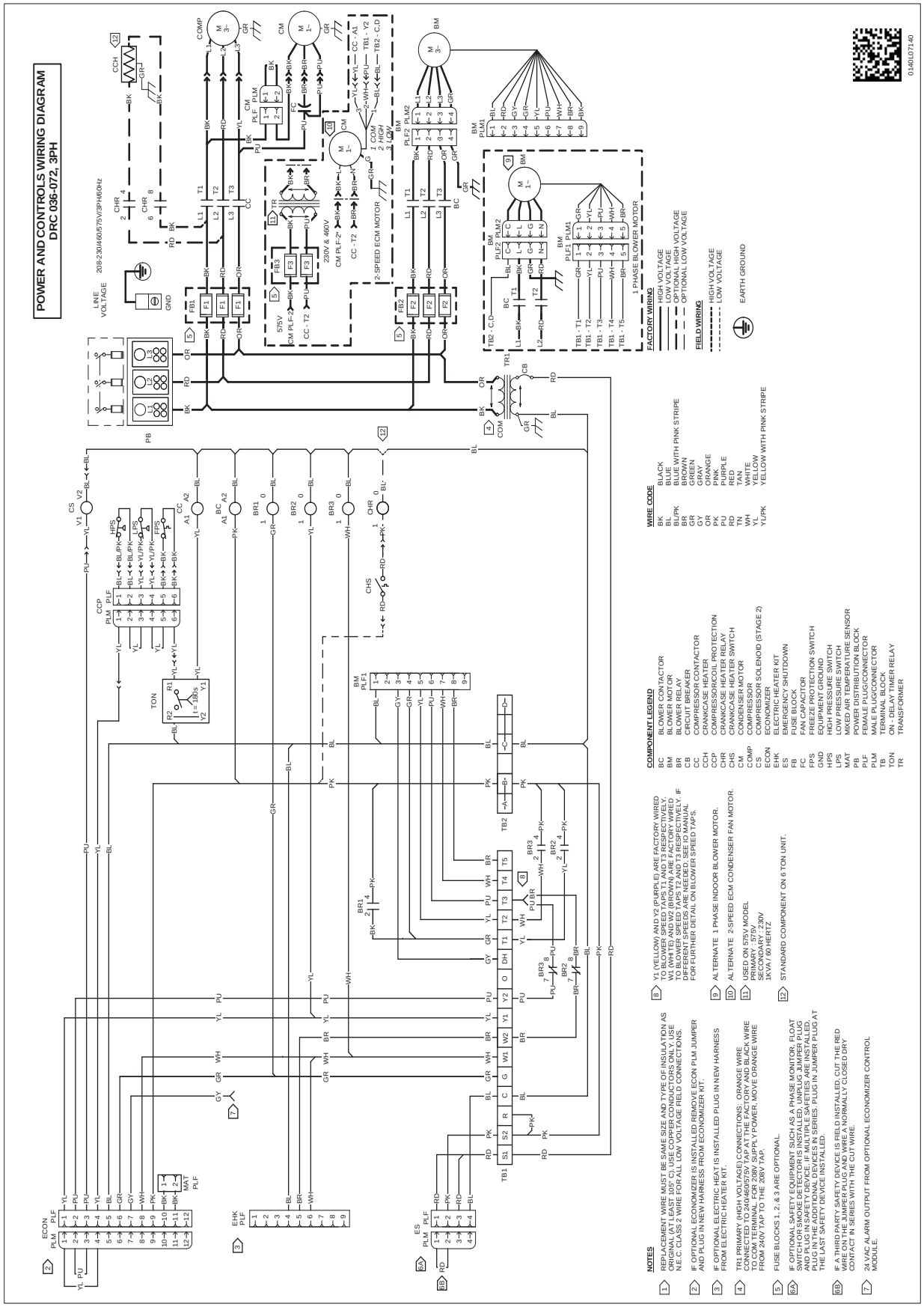

WARNING

High Voltage: Disconnect all power before servicing or installing this unit. Multiple power sources may be present. Failure to do so may cause property damage, personal injury, or death.

Wiring is subject to change. Always refer to the wiring diagram on the unit for the most up-to-date wiring.

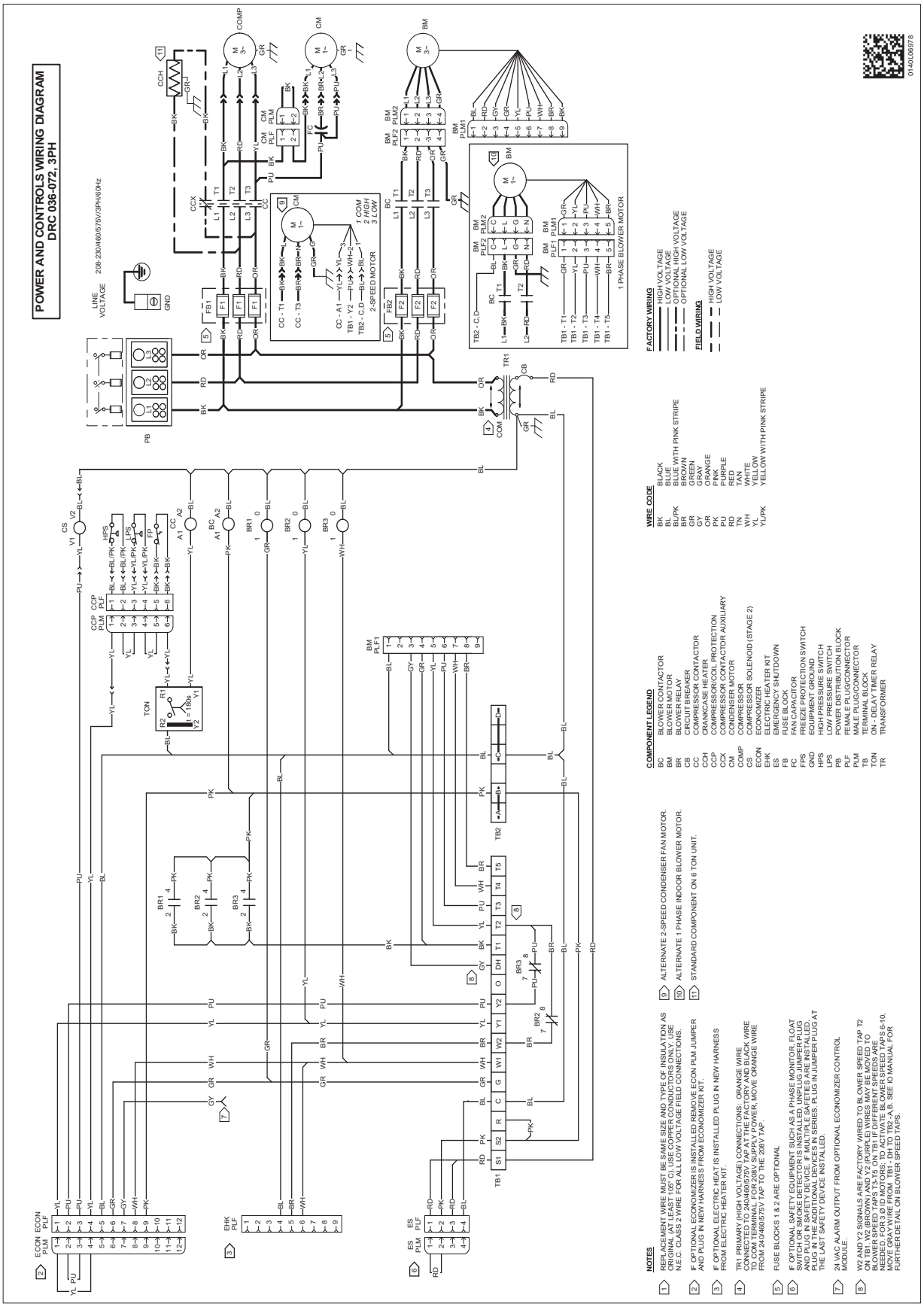

Wiring is subject to change. Always refer to the wiring diagram on the unit for the most up-to-date wiring.

WARNING

High Voltage: Disconnect all power before servicing or installing this unit. Multiple power sources may be present. Failure to do so may cause property damage, personal injury, or death.

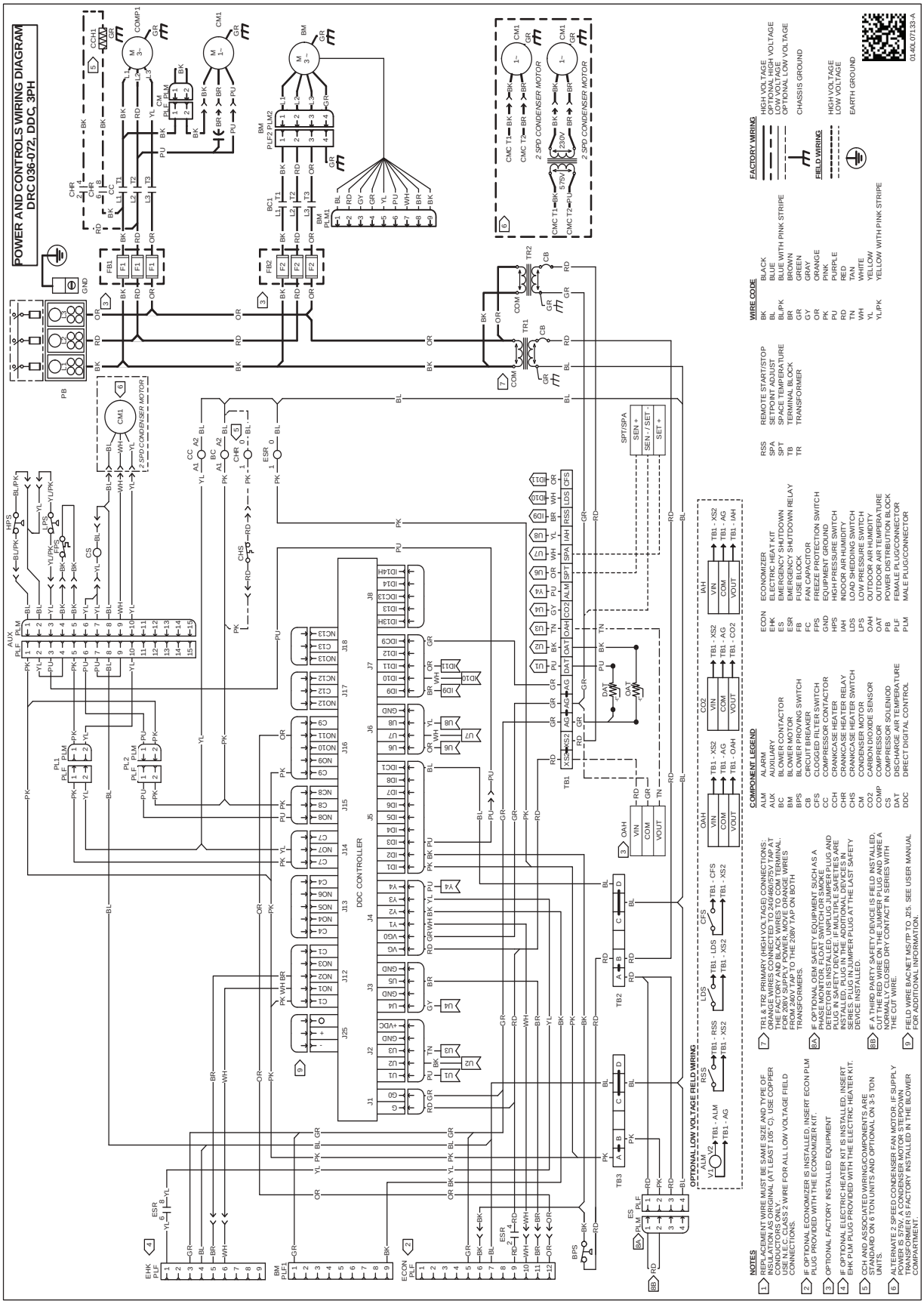

WARNING

High Voltage: Disconnect all power before servicing or installing this unit. Multiple power sources may be present. Failure to do so may cause property damage, personal injury, or death.

Wiring is subject to change. Always refer to the wiring diagram on the unit for the most up-to-date wiring.

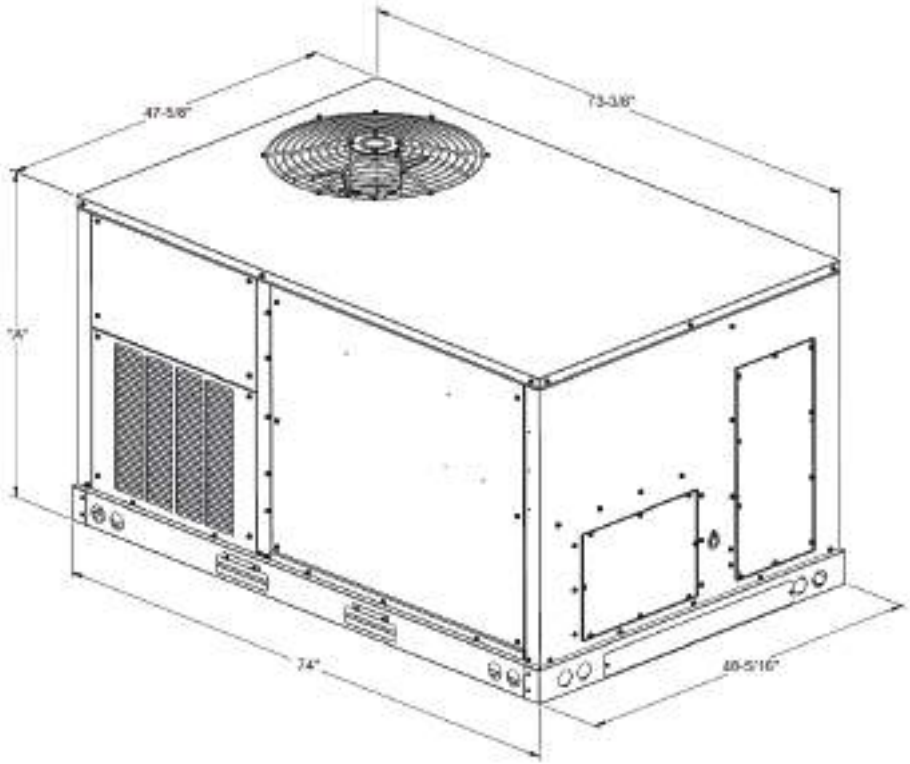

Model Size	DIM "A"
3 ton	39⅞
4 & 5 ton	43½
6 ton	53¾

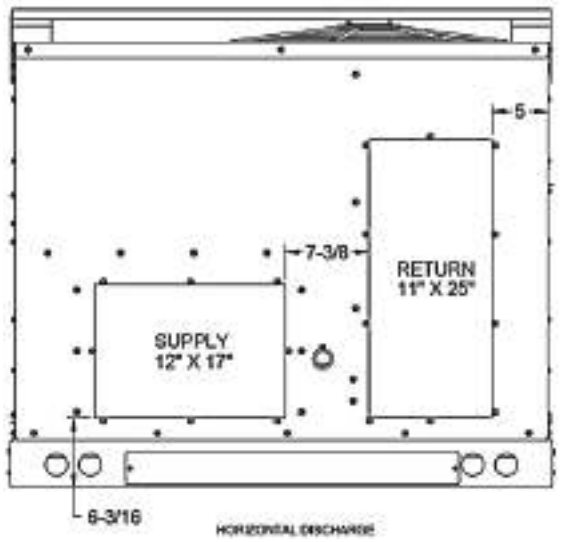

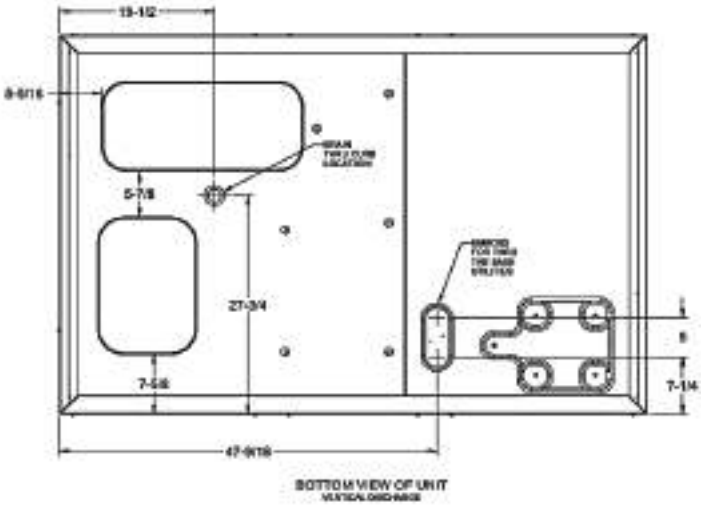

Electrical Connections

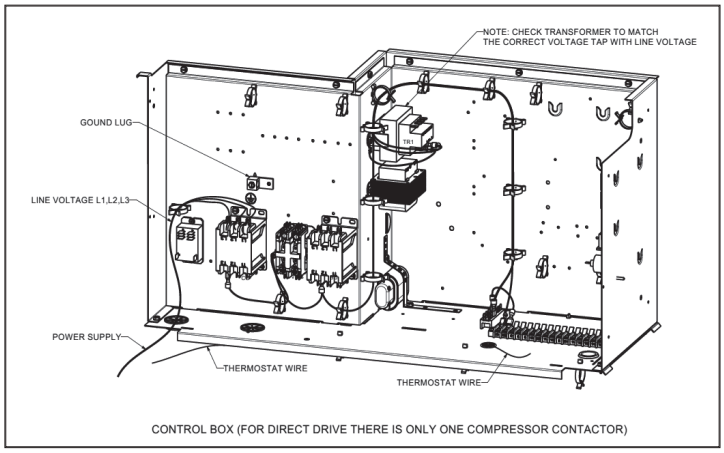

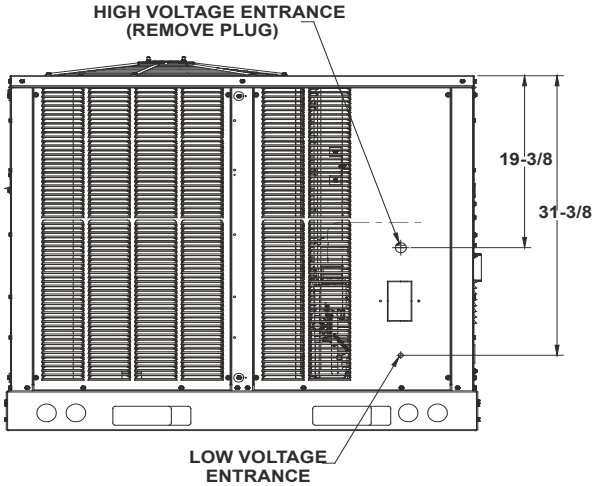

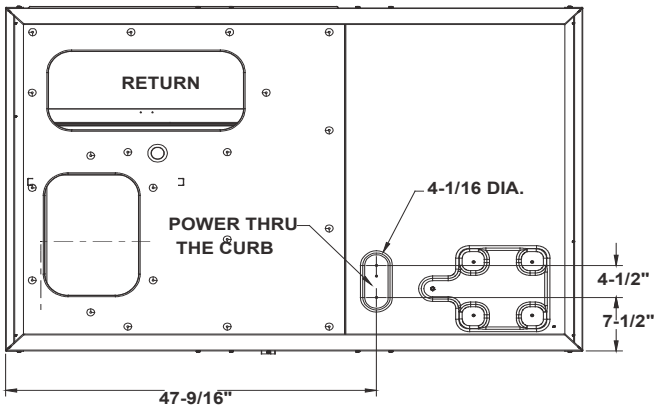

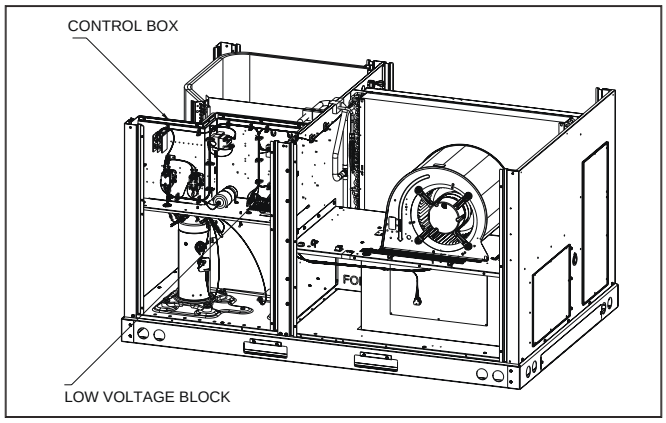

Unit Clearances

Service Clearance

Allow for recommended service clearances as shown in figure to the right. In situations that have multiple units, a 36” minimum clearance is required between the condenser coils. A clearance of 48” is recommended on all sides of the unit to allow service access and to ensure proper ventilation and condenser airflow. The top of the unit should be unobstructed. Provide a roof walkway along the sides of the unit for service and access to controls and components. Contact your Daikin sales representative for service requirements less than those recommended.

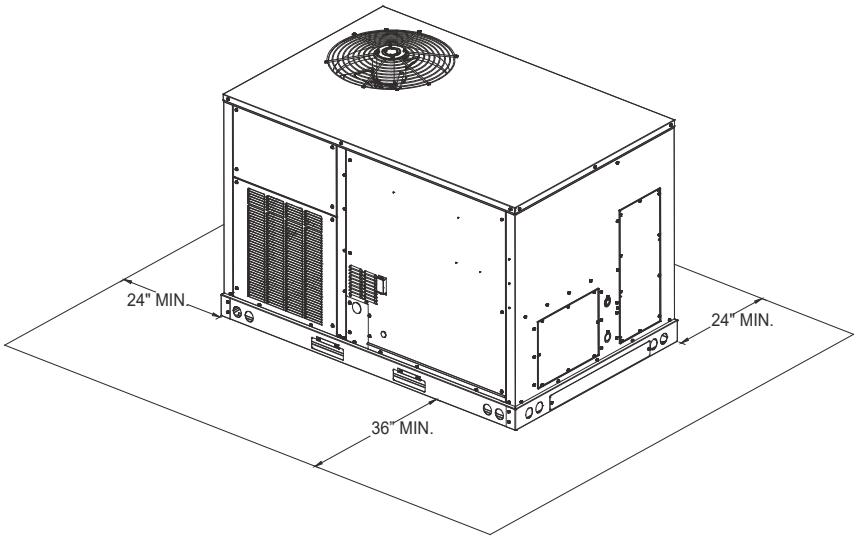

Unit Location

The structural engineer must verify that the roof has adequate support and ability to minimize deflection. Take extreme caution when using on a wooden roof structure. Unit condenser coils should be in a location that avoids any heated exhaust air.

Allow sufficient space around the unit for maintenance/service clearance. Consult your Daikin sales representative if available clearances do not meet minimum recommendations.

Where code considerations, such as the NEC, require extended clearances, these take precedence.

Provisions for forks have been included in the unit base frame. No other fork locations are approved.

» Unit must be lifted by the four lifting holes located at the base frame corners.

» Lifting cables should be attached to the unit with shackles.

» The distance between the crane hook and the top of the unit must not be less than 60”.

» Two spreader bars must span over the unit to prevent damage to the cabinet by the lift cables. Spreader bars must be of sufficient length so that cables do not come in contact with the unit during transport. Remove wood struts mounted beneath unit base frame before setting unit on roof curb. These struts are intended to protect unit base frame from forklift damage. To remove the struts, extract the sheet metal retainers and pull the struts through the base of the unit. Refer to rigging label on the unit.

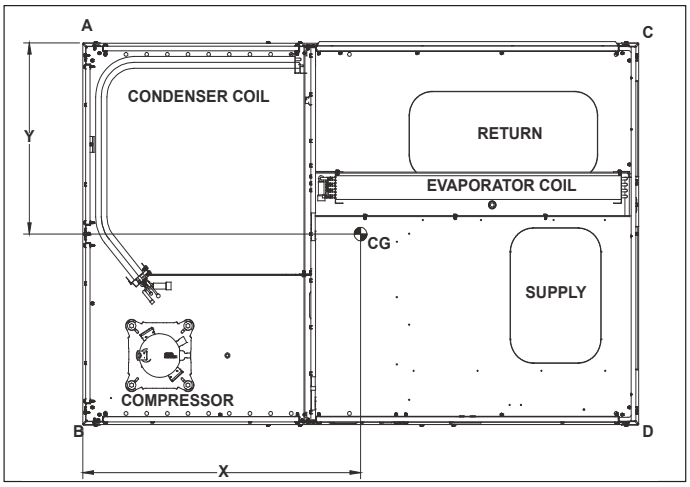

Corner & Center-of-Gravity Locations

Important: If using bottom discharge with roof curb, ductwork should be attached to the curb prior to installing the unit. Refer to the Roof Curb Installation Instructions for proper curb installation. Curbing must be installed in compliance with the National Roofing Contractors Association Manual. Lower unit carefully onto roof mounting curb. While rigging the unit, the center of gravity will cause the condenser end to be lower than the supply air end. Bring condenser end of unit into alignment with the curb. With condenser end of the unit resting on curb member and using curb as a fulcrum, lower opposite end of the unit until entire unit is seated on the curb. When a rectangular cantilever curb is used, take care to center the unit. Check for proper alignment and orientation of supply and return openings with duct.

Roof Curb Installation

The roof curb is field-assembled and must be installed level (within 1/16” per foot side to side). A sub-base must be constructed by the contractor in applications involving pitched roofs. Gaskets are furnished and must be installed between the unit and curb. For proper installation, follow NRCA guidelines. In applications requiring post and rail installation, an I-beam securely mounted on multiple posts should support the unit on each side. In addition, the insulation on the underside of the unit should be protected from the elements. Applications in geographic areas subjected to seismic or hurricane conditions must meet code requirements for fastening the unit to the curb and the curb to the building structure. For further and more detailed information please refer to our Daikin Light Commercial Packaged unit IOD.

Weights

Model	Shipping Weight (lbs)	Operating Weight (lbs)	Corner Weights (lbs)				Length	Width
			A	B	C	D	X (in)	Y (in)
DRC036	595	537	119	160	123	135	35½	25½
DRC048	648	590	150	167	113	160	34 1/5	26 3/5
DRC060	664	606	158	166	105	177	34 2/5	26 2/3
DRC072	715	657	134	149	217	157	34 2/5	26 4/5

For details on accessories refer to document **PM-LC-ACCESSORIES**

Our continuing commitment to quality products may mean a change in specifications without notice.
© 2023 ***DAIKIN COMFORT TECHNOLOGIES MANUFACTURING, L.P.*** • Houston, Texas • Printed in the USA.