DRC Commercial

High-Efficiency Air Conditioner
Packaged Rooftop Unit
DRC Commercial
7.5 - 12.5 Nominal Tons

Up to 17 IEER / 12.4 EER

* Complete warranty details available from your local distributor or manufacturer's representative or at www.daikincomfort.com or www.daikinac.com

Supersedes 05/22

Our Perfect Package:

Harnessing energy-efficient performance, proven technology, and enhanced comfort for life.

Since becoming the first company in Japan to manufacture packaged air conditioning systems, in 1951, Daikin has supported comfortable indoor living based on the strengths and technologies that have led to the growth of the company becoming one of the world's largest manufacturers of HVAC products, systems and refrigerants.

Today, as a comprehensive global manufacturer of HVAC products and systems, the Daikin brand is committed to being recognized as a truly global and excellent company capable of continually creating new value for its customers. The company plans to pursue sustainable growth and foster business operations that consistently harmonize with the goals of improving indoor comfort.

The group philosophy of the company includes:

- Creating new value continuously for customers
- Developing world leading energy-saving technology
- Being a flexible and dynamic organization
- Allowing employees to be the driving force for the success of the company
- Fostering an atmosphere of best practices, boldness, and innovation
- Thinking and acting globally

Contents

2	**Introduction**	2
4	**Nomenclature**	4
5	**Features and Benefits**	5
	Applications	8
	Serviceability	8
9	**Product Specifications**	9
	Coil Dimension	15
	AHRI Ratings	15
	Sound Data	15
16	**Expanding Cooling Data**	16
24	**Electric Heating Data**	24
25	**Air Flow**	25
41	**DDC Air Flow**	41
56	**Static Pressure**	56
57	**HGRH Performance**	57
61	**Electrical Data**	61
79	**Wiring Diagrams**	79
83	**Dimensional Data**	83
84	**Electrical Connections**	84
	Unit Clearances	84
85	**Installation**	85
	Weights	85

For details on accessories refer to document **PM-LC-ACCESSORIES**

Nomenclature

D	R	C	120	3	D	XXX	C	X	A	X	X	X	X	X	X	X	X	X	A	*
1	2	3	4,5,6	7	8	9,10,11	12	13	14	15	16	17	18	19	20	21	22	23	24

Revision Levels
Major & Minor

Brand
D Daikin

Configuration
R High Efficiency

Application
C Cooling
G Gas Heat
H Heat Pump

Nominal Cooling Capacity
090 7½ Tons
102 8½ Tons
120 10 Tons
150 12½ tons

Voltage
3 208-230/3/60
4 460/3/60
7 575/3/60

Supply Fan/Drive Type/Motor
D Direct Drive-Standard Static
L Direct Drive -Medium Static
W Direct Drive -High Static

Nominal Heating Capacity

Gas/Electric	A/C H/P Factory-Installed Electric Heat	
130 130,000 BTU/h	XXX	No Heat
180 180,000 BTU/h	010	10 kW
225 225,000 BTU/h	015	15 kW
240 240,000 BTU/h	020	20 kW
	030	30 kW
	045	45 kW
	060	60 kW

See product specifications for heat size(s) available for each capacity.

Refrigeration Systems
C Two stage cooling modes
F Two stage cooling modes with Hot Gas Reheat and Low-ambient control

Heat Exchanger
X No options
A Standard Aluminized Exchanger
S Stainless Steel Exchanger

Controls
A Electro-mechanical controls
B DDC w/ BACnet™ interface

X No Options

PE Connection
X No Options
B Single-point power connection for Power Exhaust

X No Options

Service Options
X No Option
A Powered convenience outlet
B Non-powered convenience outlet
C Hinge Panels
D Hinged Panels and Powered convenience outlet
E Hinged Panels and non-powered convenience outlet
M Metal frame filter and Hinged Panels (National Account Customers Only)

Electrical
X No Options
A Non-Fused Disconnect
B Phase Monitor
C Thru-the-base connections
E Non-Fused Disconnect and Phase Monitor
F Non-Fused Disconnect and Thru-the-base connections
H Phase Monitor and Thru-the-base connections
L Non-Fused Disconnect, Thru-the-base connections and Phase Monitor

Economizer
X No Options
A Ultra Low-Leak Downflow Economizer w/ Enthalpy Sensor
B Low-Leak Downflow Economizer w/ Enthalpy Sensor
E Ultra Low-Leak Downflow Economizer for DDC controls w/ Enthalpy Sensor
G Ultra Low-Leak Downflow Economizer w/ Dry Bulb Sensor
H Low-Leak Downflow Economizer w/ Dry Bulb Sensor
L Ultra Low-Leak Downflow Economizer for DDC controls w/ Dry Bulb Sensor
N Low-Leak Downflow Economizer for DDC controls w/ Enthalpy Sensor
P Low-Leak Downflow Economizer for DDC controls w/ Dry Bulb Sensor

Hail guard
X No Options
C Hail Guard

Sensors
X No Options
A RA Smoke Detector
B SA Smoke Detector
C RA & SA Smoke Detector

G / E Stocking Models	
Daikin 7.5-12.5 Ton Belt-Drive	
Model Number	**Code String**
DRC0903D000001S	DRC0903DXXXCXAXXXXXXXXAA
DRC0904D000001S	DRC0904DXXXCXAXXXXXXXXAA
DRC0907D000001S	DRC0907DXXXCXAXXXXXXXXAA
DRC1023D000001S	DRC1023DXXXCXAXXXXXXXXAA
DRC1024D000001S	DRC1024DXXXCXAXXXXXXXXAA
DRC1027D000001S	DRC1027DXXXCXAXXXXXXXXAA
DRC1203D000001S	DRC1203DXXXCXAXXXXXXXXAA
DRC1204D000001S	DRC1204DXXXCXAXXXXXXXXAA
DRC1207D000001S	DRC1207DXXXCXAXXXXXXXXAA
DRC1503D000001S	DRC1503DXXXCXAXXXXXXXXAA
DRC1504D000001S	DRC1504DXXXCXAXXXXXXXXAA
DRC1507D000001S	DRC1507DXXXCXAXXXXXXXXAA

Daikin Packaged Rooftop Units (RTUs) are built to perform, with features and options that help provide low installation and operation costs, superior indoor air quality, efficient operation, and longevity.

Installation

Daikin Packaged units are designed with fast and easy installation in mind and are ideal for both new construction and retrofit projects. Our packaged rooftop units are built to be a direct replacement for most rooftop units on the field without the need of a curb adapter, to be able to replace the unit in a shorter time and at a lower cost (compared to the previous design).

Cabinet Construction

Daikin packaged rooftop units are made with high quality galvanized steel with a powder-paint finish to provide higher corrosion resistance.

- Easy accessibility using our tool-less filter access
- The interior surface in the indoor air section is fully insulated to prevent sweating and thermal losses, using our foil face fiberglass insulation which also omits exposed filter fibers into the airstream.
- 1" Raised flanged edges around the supply and return offer easy installation for the duct connections.

- The full perimeter base rail is built using heavy gauge galvanized steel for a stronger structural installation. The base rails are a minimum of 3½" tall and include holes to allow for overhead rigging and lifting with forklifts.
- Electrical lines and gas lines can be brought through the base of the unit or through the horizontal knockout for easy installation and accessibility on the field.

Compressor

High performance, low noise scroll compressors to match the required total load.

- Resiliently factory-mounted on rubber grommets for vibration isolation
- Refrigeration circuit includes both low- and high-pressure transducer, high pressure safety switch and temperature sensors for the suction and discharge lines.
- Unit is factory charged with environmentally friendly R-410A refrigerant.
- Compressor location outside the condenser section to avoid air bypass.
- Internal overload protection included with compressor.
- Dual single-stage scroll compressor for partial load applications.

Supply Fan

The direct-drive with airfoil single width, single inlet (SWSI) Class II construction supply fan with aluminum fan +blades provides efficient and quiet operation at wide ranging static pressure and air flow requirements.

- Fan wheel is continuously welded to the hub plate and end rim for long lasting reliable operation.
- Direct-drive ECM motor removes the need for belts, sheaves, or bearings and its permanently lubricated motors provides low maintenance cost.
- Each fan assembly is dynamically trim balanced at the factory before shipment for quick start-up and efficient operation.
- Electromechanical integrated controls modulate the supply fan motor
- Motor with thermal overload is provided for motor long lasting operation.

Coils

All units use large face area outdoor coils. These coils are constructed with seamless copper tubes, mechanically bonded into aluminum plate-type fins with full drawn collars to completely cover the tubes for high operating efficiencies.

The indoor coil section is installed in a draw through configuration to provide better dehumidification.

» Coils are factory pressure tested to ensure pressure and leak integrity.

» Copper tube / aluminum fin coils on condenser and evaporator

» 5mm Smart Coil Technology on all condenser coils for improved performance and reduced refrigerant load.

Controls and Wiring

Packaged rooftop units come equipped with a well-organized, large, easy to use, weatherproof internal control box with easy access, for a better user experience.

» Units are factory-wired with labeled color-coded wires and complete 24-volt Electromechanical controls package.

» Terminal blocks are provided as standard for easy installation and field power wiring.

» The Daikin iLINQ Controller is a factory-installed solution to provide intelligent control for Daikin Light Commercial rooftop units* (RTUs). iLINQ provides physical inputs and outputs to control and monitor the RTU and features a graphic web interface for remote access (via a computer or tablet). Equipped with built-in BACnet™ IP and MS/TP interface or it can be used with an optional LonWorks® card that is available to integrate the Daikin RTU with building automation systems (BMS).

Filtration

Unit provides a draw-through filter section as standard for better air quality and long lasting component maintenance.

» Filters installed on the units are standard off the shelf sizes for easy replacement.

» One size filter per unit for low maintenance cost and easy replacement.

» Tool-less filter access for easy and fast filter replacement and service.

Heating Section

Wide ranging of electric heat selections effectively handle most comfort heating demand from morning warm-up control to full heat.

Electric Heat

ETL approved electric heat is factory assembled, installed and tested.

» Heating control is fully integrated into the unit's control system for quick start-up and reliable control.

» Durable low watt density, nickel chromium elements provide longer life (compared to units without)..

» Fuses are provided in each branch circuit to a maximum of 48 Amps per NEC requirements.

» Single-point power connection reduces installation cost.

» For operational safeties electric heat includes automatic reset,and high temperature limit safety protection and an airflow safety switch to prevent electric heat operation in the event of no airflow.

Electrical

Units are completely wired and tested at the factory to provide faster commissioning and start-up.

» Wiring complies with NEC requirements and all applicable UL standards.

» For ease of use, wiring and electrical components are number coded and labeled according to the electrical diagram.

» A 115 V GFI convenience outlet requiring independent power supply for the receptacle is optional.

» An optional unit powered 20 amp 115 V convenience outlet, complete with factory mounted transformer, disconnect switch, and primary and secondary overload protection, eliminates the need to pull a separate 115 V power source.

» Supply air fan, compressor, and condenser fan motor branch circuits have individual short circuit protection. Unit includes knockouts in the bottom of the main control panels for field wiring entrance.

» A single-point power connection with power block is standard and a terminal board is provided for connecting low voltage control wiring.

» For better serviceability an optional non-fused disconnect switch can be installed inside the control panel and operated by an externally mounted handle to disconnect the electrical power at the unit.

Daikin Modulating Hot Gas Reheat Dehumidification

Using a space sensor in conjunction with the Daikin iLINQ Controller and Reheat Module, the unit can initiate a Dehumidification Mode as the space humidity rises above setpoint. In this mode, the modulating valve diverts a percentage of the hot gas to the reheat coil as required in order to maintain supply air temperature requirements while lowering the space relative humidity. The modulating valve system allows smooth transition into dehumidification and longer run time at a steady supply air temperature. The indoor fan will operate at high and low speed during dehumidification mode.

DAIKIN

Applications

Daikin Rooftop units are intended for comfort cooling applications in normal heating, ventilating, and air conditioning. Consult your local Daikin sales representative for applications involving operations at high ambient temperatures, high altitudes, non-cataloged voltages, or for job-specific unit selections that fall outside of the range of the catalog tables.

For proper operation, units should be rigged in accordance with instructions stated on the installation manual. Fire dampers, if required, must be installed in the ductwork according to local and/or state codes. No space is allowed for these dampers in the unit.

Follow factory check, test and start procedures explicitly to achieve satisfactory start-up and operation.

Most rooftop applications take advantage of the significant energy savings provided with economizer operation. When an economizer system is used, mechanical refrigeration is typically not required below an ambient temperature of 50°F.

Serviceability

Daikin packaged rooftop units are built with serviceability in mind, designed to make future maintenance and service on the unit easy and accessible.

- Our packaged rooftop units offer a slide out blower to facilitate the access and removal of the fan.
- Filter panels on the small chassis line offer tool-less access for easy maintenance.
- Independent compressor outside of the air bypass to eliminate component blockage and provide easy access.
- Labeled field connections, color coded and continuously marked wire to identify point-to-point component connections.
- All 7.5- 12.5 ton units are designed for convertible airflow orientation to serve downflow or horizontal applications. Every unit ships prepared to convert to horizontal orientation in the field if required.
- Condenser clean out from inside-out.
- Easy access to gas valves and control panel.

Model	DRC0903D000001S	DRC0904D000001S	DRC0907D000001S	DRC1023D000001S	DRC1024D000001S	DRC1027D000001S
COOLING CAPACITY						
Total, BTU/h	90,000	90,000	90,000	102,000	102,000	102,000
IEER / EER	17/12.4	17/12.4	17/12.4	17/12.3	17/12.3	17/12.3
AHRI Reference #	206913012	206913012	206913012	206913014	206913014	206913014
EVAPORATOR MOTOR COIL						
Motor Type	DIRECT DRIVE	DIRECT DRIVE	DIRECT DRIVE	DIRECT DRIVE	DIRECT DRIVE	DIRECT DRIVE
External Static Pressure (ESP)	0.8 IN.W.G.	0.8 IN.W.G.	0.8 IN.W.G.	0.8 IN.W.G.	0.8 IN.W.G.	0.8 IN.W.G.
Wheel Dia. X Width	Ø15.12 X 12.62	Ø15.12 X 12.62	Ø15.12 X 12.62	Ø15.12 X 12.62	Ø15.12 X 12.62	Ø15.12 X 12.62
Indoor Nominal CFM	3000	3000	3000	3100	3100	3100
RPM	1300	1300	1300	1300	1300	1300
Indoor Horsepower	1.7	1.7	1.7	2.4	2.4	2.4
Filter Size (in)	16X25X2 (4)	16X25X2 (4)	16X25X2 (4)	20x25x2(2) + 25x25x2(2)	20x25x2(2) + 25x25x2(2)	20x25x2(2) + 25x25x2(2)
Drain Size (NPT)	¾	¾	¾	¾	¾	¾
R-410A Refrigerant Charge (oz.)	133/133	133/133	133/133	155/155	155/155	155/155
Evaporator Coil Face Area (ft^2)	12.8	12.8	12.8	16.6	16.6	16.6
Rows Deep/ Fins per Inch	4/16	4/16	4/16	4/16	4/16	4/16
CONDENSER FAN/COIL						
Quantity of Condenser Fan Motors	2	2	2	2	2	2
RPM (High/Low stage)	1122	1050	1050	1122	1050	1050
Outdoor Horsepower	1/3	1/3	1/3	1/3	1/3	1/3
Fan Diameter/ # Fan Blades	22/3	22/3	22/3	22/3	22/3	22/3
Face Area (ft^2)	35.3	35.3	35.3	35.3	35.3	35.3
Rows Deep / Fins per Inch	2/28±1	2/28±1	2/28±1	2/28±1	2/28±1	2/28±1
COMPRESSOR						
Quantity / Type / Stages	2/SCROLL/1	2/SCROLL/1	2/SCROLL/1	2/SCROLL/1	2/SCROLL/1	2/SCROLL/1
Compressor RLA / LRA	13.1/83.1	6.1/41.0	4.4/33.0	14.5/98.0	6.3/55.0	6.0/41.0
ELECTRICAL DATA						
Voltage-Phase-Frequency	208/230-3-60	460-3-60	575-3-60	208/230-3-60	460-3-60	575-3-60
Indoor Blower FLA	5.8	4	2.9	8	5.4	4
Max External Static (In. W.C.)	0.8	0.8	0.8	0.8	0.8	0.8
Outdoor Fan FLA	2	0.85	0.67	2	0.85	0.67
Min. Circuit Ampacity[1]	39.4/39.4	19.4	14.0	44.6/44.6	21.4	18.9
Max. Overcurrent Protection (A)[2]	50/50	25	15	50/50	25	20
Power Supply Conduit Hole Dia. (in)	1.375	1.375	1.375	1.375	1.375	1.375
Low-VoltageConduit Hole Dia. (in)	0.375	0.375	0.375	0.375	0.375	0.375
OPERATING WEIGHT (LBS.)						
Operating Weight (lbs)	1087	1087	1087	1098	1098	1098
SHIPPING WEIGHT (LBS.)						
Ship Weight (lbs)	1162	1162	1162	1173	1173	1173

[1] Wire size should be determined in accordance with National Electrical Codes. Extensive wire runs will require larger wire sizes.
[2] May use fuses or HACR-type circuit breakers of the same size as noted.
Note: Always check the S&R plate for electrical data on the unit being installed.

Model	DRC1203D000001S	DRC1204D000001S	DRC1207D000001S	DRC1503D000001S	DRC1504D000001S	DRC1507D000001S
COOLING CAPACITY						
Total, BTU/h	115,000	115,000	115,000	137,000	137,000	137,000
IEER / EER	17/12.2	17/12.2	17/12.2	16/11.7	16/11.7	16/11.7
AHRI Reference #	206913016	206913016	206913016	206913018	206913018	206913018
EVAPORATOR MOTOR COIL						
Motor Type	DIRECT DRIVE	DIRECT DRIVE	DIRECT DRIVE	DIRECT DRIVE	DIRECT DRIVE	DIRECT DRIVE
External Static Pressure (ESP)	0.8 IN.W.G.	0.8 IN.W.G.	0.8 IN.W.G.	0.8 IN.W.G.	0.8 IN.W.G.	0.8 IN.W.G.
Wheel Dia. X Width	Ø15.12 X 15.00	Ø15.12 X 15.00	Ø15.12 X 15.00	Ø15.12 X 15.00	Ø15.12 X 15.00	Ø15.12 X 15.00
Indoor Nominal CFM	3550	3550	3550	3800	3800	3800
RPM	1300	1300	1300	1300	1300	1300
Indoor Horsepower	2.4	2.4	2.4	3.5	3.5	3.5
Filter Size (in)	20x25x2(2) + 25x25x2(2)	20x25x2(2) + 25x25x2(2)	20x25x2(2) + 25x25x2(2)	25x25x2(4)	25x25x2(4)	25x25x2(4)
Drain Size (NPT)	¾	¾	¾	¾	¾	¾
R-410A Refrigerant Charge (oz.)	184/180	184/180	184/180	190/188	190/188	190/188
Evaporator Coil Face Area (ft^2)	16.6	16.6	16.6	19.1	19.1	19.1
Rows Deep/ Fins per Inch	4/16	4/16	4/16	4/16	4/16	4/16
CONDENSER FAN/COIL						
Quantity of Condenser Fan Motors	2	2	2	2	2	2
RPM (High/Low stage)	1122	1050	1050	1122	1050	1050
Outdoor Horsepower	1/3	1/3	1/3	1/3	1/3	1/3
Fan Diameter/ # Fan Blades	22/3	22/3	22/3	22/3	22/3	22/3
Face Area (ft^2)	39.6	39.6	39.6	43.8	43.8	43.8
Rows Deep / Fins per Inch	2/28±1	2/28±1	2/28±1	2/28±1	2/28±1	2/28±1
COMPRESSOR						
Quantity / Type / Stages	2/SCROLL/1	2/SCROLL/1	2/SCROLL/1	2/SCROLL/1	2/SCROLL/1	2/SCROLL/1
Compressor RLA / LRA	15.9/110	7.1/52.0	5.1/39.5	19/123.0	9.7/62.0	7.4/50.0
ELECTRICAL DATA						
Voltage-Phase-Frequency	208/230-3-60	460-3-60	575-3-60	208/230-3-60	460-3-60	575-3-60
Indoor Blower FLA	8	5.4	4	10.9	7.2	5
Max External Static (In. W.C.)	0.8	0.8	0.8	0.8	0.8	0.8
Outdoor Fan FLA	2	0.85	0.67	2	0.85	0.67
Min. Circuit Ampacity[1]	47.8/47.8	23.0	16.9	60.7/60.7	32.3	28.7
Max. Overcurrent Protection (A)[2]	60/60	30	20	70/70	40	35
Power Supply Conduit Hole Dia. (in)	1.375	1.375	1.375	1.375	1.375	1.375
Low-VoltageConduit Hole Dia. (in)	0.375	0.375	0.375	0.375	0.375	0.375
OPERATING WEIGHT (LBS.)						
Operating Weight (lbs)	1117	1117	1117	1195	1195	1195
SHIPPING WEIGHT (LBS.)						
Ship Weight (lbs)	1192	1192	1192	1270	1270	1270

[1] Wire size should be determined in accordance with National Electrical Codes. Extensive wire runs will require larger wire sizes.
[2] May use fuses or HACR-type circuit breakers of the same size as noted.
Note: Always check the S&R plate for electrical data on the unit being installed.

Model	DRC0903L000001	DRC0904L000001	DRC0907L000001	DRC1023L000001	DRC1024L000001	DRC1027L000001
COOLING CAPACITY						
Total, BTU/h	90,000	90,000	90,000	102,000	102,000	102,000
IEER / EER	17/12.4	17/12.4	17/12.4	17/12.3	17/12.3	17/12.3
AHRI Reference #	206913012	206913012	206913012	206913014	206913014	206913014
EVAPORATOR MOTOR COIL						
Motor Type	DIRECT DRIVE	DIRECT DRIVE	DIRECT DRIVE	DIRECT DRIVE	DIRECT DRIVE	DIRECT DRIVE
External Static Pressure (ESP)	1.4 IN.W.G.	1.4 IN.W.G.	1.4 IN.W.G.	1.4 IN.W.G.	1.4 IN.W.G.	1.4 IN.W.G.
Wheel Dia. X Width	Ø15.12 X 12.62	Ø15.12 X 12.62	Ø15.12 X 12.62	Ø15.12 X 12.62	Ø15.12 X 12.62	Ø15.12 X 12.62
Indoor Nominal CFM	3000	3000	3000	3100	3100	3100
RPM	1300	1300	1300	1300	1300	1300
Indoor Horsepower	2.4	2.4	2.4	2.4	2.4	2.4
Filter Size (in)	16X25X2 (4)	16X25X2 (4)	16X25X2 (4)	20x25x2(2) + 25x25x2(2)	20x25x2(2) + 25x25x2(2)	20x25x2(2) + 25x25x2(2)
Drain Size (NPT)	¾	¾	¾	¾	¾	¾
R-410A Refrigerant Charge (oz.)	133/133	133/133	133/133	155/155	155/155	155/155
Evaporator Coil Face Area (ft^2)	12.8	12.8	12.8	16.6	16.6	16.6
Rows Deep/ Fins per Inch	4/16	4/16	4/16	4/16	4/16	4/16
CONDENSER FAN/COIL						
Quantity of Condenser Fan Motors	2	2	2	2	2	2
RPM (High/Low stage)	1122	1050	1050	1122	1050	1050
Outdoor Horsepower	1/3	1/3	1/3	1/3	1/3	1/3
Fan Diameter/ # Fan Blades	22/3	22/3	22/3	22/3	22/3	22/3
Face Area (ft^2)	35.3	35.3	35.3	35.3	35.3	35.3
Rows Deep / Fins per Inch	2/28±1	2/28±1	2/28±1	2/28±1	2/28±1	2/28±1
COMPRESSOR						
Quantity / Type / Stages	2/SCROLL/1	2/SCROLL/1	2/SCROLL/1	2/SCROLL/1	2/SCROLL/1	2/SCROLL/1
Compressor RLA / LRA	13.1/83.1	6.1/41.0	4.4/33.0	14.5/98.0	6.3/55.0	6.0/41.0
ELECTRICAL DATA						
Voltage-Phase-Frequency	208/230-3-60	460-3-60	575-3-60	208/230-3-60	460-3-60	575-3-60
Indoor Blower FLA	8	5.4	4	8	5.4	4
Max External Static (In. W.C.)	1.4	1.4	1.4	1.4	1.4	1.4
Outdoor Fan FLA	2	0.85	0.67	2	0.85	0.67
Min. Circuit Ampacity[1]	41.6/41.6	20.8	15.1	44.6/44.6	21.4	18.9
Max. Overcurrent Protection (A)[2]	50/50	25	20	50/50	25	20
Power Supply Conduit Hole Dia. (in)	1.375	1.375	1.375	1.375	1.375	1.375
Low-VoltageConduit Hole Dia. (in)	0.375	0.375	0.375	0.375	0.375	0.375
OPERATING WEIGHT (LBS.)						
Operating Weight (lbs)	1087	1087	1087	1098	1098	1098
SHIPPING WEIGHT (LBS.)						
Ship Weight (lbs)	1162	1162	1162	1173	1173	1173

[1] Wire size should be determined in accordance with National Electrical Codes. Extensive wire runs will require larger wire sizes.
[2] May use fuses or HACR-type circuit breakers of the same size as noted.
Note: Always check the S&R plate for electrical data on the unit being installed.

Model	DRC1203L000001	DRC1204L000001	DRC1207L000001	DRC1503L000001	DRC1504L000001	DRC1507L000001
COOLING CAPACITY						
Total, BTU/h	115,000	115,000	115,000	137,000	137,000	137,000
IEER / EER	17/12.2	17/12.2	17/12.2	16/11.7	16/11.7	16/11.7
AHRI Reference #	206913016	206913016	206913016	206913018	206913018	206913018
EVAPORATOR MOTOR COIL						
Motor Type	DIRECT DRIVE	DIRECT DRIVE	DIRECT DRIVE	DIRECT DRIVE	DIRECT DRIVE	DIRECT DRIVE
External Static Pressure (ESP)	1.4 IN.W.G.	1.4 IN.W.G.	1.4 IN.W.G.	1.4 IN.W.G.	1.4 IN.W.G.	1.4 IN.W.G.
Wheel Dia. X Width	Ø15.12 X 15.00	Ø15.12 X 15.00	Ø15.12 X 15.00	Ø15.12 X 15.00	Ø15.12 X 15.00	Ø15.12 X 15.00
Indoor Nominal CFM	3550	3550	3550	3800	3800	3800
RPM	1300	1300	1300	1300	1300	1300
Indoor Horsepower	3.5	3.5	3.5	3.5	3.5	3.5
Filter Size (in)	20x25x2(2) + 25x25x2(2)	20x25x2(2) + 25x25x2(2)	20x25x2(2) + 25x25x2(2)	25x25x2(4)	25x25x2(4)	25x25x2(4)
Drain Size (NPT)	¾	¾	¾	¾	¾	¾
R-410A Refrigerant Charge (oz.)	184/180	184/180	184/180	190/188	190/188	190/188
Evaporator Coil Face Area (ft^2)	16.6	16.6	16.6	19.1	19.1	19.1
Rows Deep/ Fins per Inch	4/16	4/16	4/16	4/16	4/16	4/16
CONDENSER FAN/COIL						
Quantity of Condenser Fan Motors	2	2	2	2	2	2
RPM (High/Low stage)	1122	1050	1050	1122	1050	1050
Outdoor Horsepower	1/3	1/3	1/3	1/3	1/3	1/3
Fan Diameter/ # Fan Blades	22/3	22/3	22/3	22/3	22/3	22/3
Face Area (ft^2)	39.6	39.6	39.6	43.8	43.8	43.8
Rows Deep / Fins per Inch	2/28±1	2/28±1	2/28±1	2/28±1	2/28±1	2/28±1
COMPRESSOR						
Quantity / Type / Stages	2/SCROLL/1	2/SCROLL/1	2/SCROLL/1	2/SCROLL/1	2/SCROLL/1	2/SCROLL/1
Compressor RLA / LRA	15.9/110	7.1/52.0	5.1/39.5	19/123.0	9.7/62.0	7.4/50.0
ELECTRICAL DATA						
Voltage-Phase-Frequency	208/230-3-60	460-3-60	575-3-60	208/230-3-60	460-3-60	575-3-60
Indoor Blower FLA	10.9	7.2	5	10.9	7.2	5
Max External Static (In. W.C.)	1.4	1.4	1.4	1.4	1.4	1.4
Outdoor Fan FLA	2	0.85	0.67	2	0.85	0.67
Min. Circuit Ampacity[1]	50.7/50.7	24.8	17.9	60.7/60.7	32.3	28.7
Max. Overcurrent Protection (A)[2]	60/60	30	20	70/70	40	35
Power Supply Conduit Hole Dia. (in)	1.375	1.375	1.375	1.375	1.375	1.375
Low-VoltageConduit Hole Dia. (in)	0.375	0.375	0.375	0.375	0.375	0.375
OPERATING WEIGHT (LBS.)						
Operating Weight (lbs)	1117	1117	1117	1195	1195	1195
SHIPPING WEIGHT (LBS.)						
Ship Weight (lbs)	1192	1192	1192	1270	1270	1270

[1] Wire size should be determined in accordance with National Electrical Codes. Extensive wire runs will require larger wire sizes.
[2] May use fuses or HACR-type circuit breakers of the same size as noted.
Note: Always check the S&R plate for electrical data on the unit being installed.

Model	DRC0903W000001	DRC0904W000001	DRC0907W000001	DRC1023W000001	DRC1024W000001	DRC1027W000001
COOLING CAPACITY						
Total, BTU/h	90,000	90,000	90,000	102,000	102,000	102,000
IEER / EER	17/12.4	17/12.4	17/12.4	17/12.3	17/12.3	17/12.3
AHRI Reference #	206913012	206913012	206913012	206913014	206913014	206913014
EVAPORATOR MOTOR COIL						
Motor Type	DIRECT DRIVE	DIRECT DRIVE	DIRECT DRIVE	DIRECT DRIVE	DIRECT DRIVE	DIRECT DRIVE
External Static Pressure (ESP)	2.0 IN.W.G.	2.0 IN.W.G.	2.0 IN.W.G.	2.0 IN.W.G.	2.0 IN.W.G.	2.0 IN.W.G.
Wheel Dia. X Width	Ø15.12 X 12.62	Ø15.12 X 12.62	Ø15.12 X 12.62	Ø15.12 X 12.62	Ø15.12 X 12.62	Ø15.12 X 12.62
Indoor Nominal CFM	3000	3000	3000	3100	3100	3100
RPM	1300	1300	1300	1300	1300	1300
Indoor Horsepower	3.5	3.5	3.5	3.5	3.5	3.5
Filter Size (in)	16X25X2 (4)	16X25X2 (4)	16X25X2 (4)	20x25x2(2) + 25x25x2(2)	20x25x2(2) + 25x25x2(2)	20x25x2(2) + 25x25x2(2)
Drain Size (NPT)	¾	¾	¾	¾	¾	¾
R-410A Refrigerant Charge (oz.)	133/133	133/133	133/133	155/155	155/155	155/155
Evaporator Coil Face Area (ft^2)	12.8	12.8	12.8	16.6	16.6	16.6
Rows Deep/ Fins per Inch	4/16	4/16	4/16	4/16	4/16	4/16
CONDENSER FAN/COIL						
Quantity of Condenser Fan Motors	2	2	2	2	2	2
RPM (High/Low stage)	1122	1050	1050	1122	1050	1050
Outdoor Horsepower	1/3	1/3	1/3	1/3	1/3	1/3
Fan Diameter/ # Fan Blades	22/3	22/3	22/3	22/3	22/3	22/3
Face Area (ft^2)	35.3	35.3	35.3	35.3	35.3	35.3
Rows Deep / Fins per Inch	2/28±1	2/28±1	2/28±1	2/28±1	2/28±1	2/28±1
COMPRESSOR						
Quantity / Type / Stages	2/SCROLL/1	2/SCROLL/1	2/SCROLL/1	2/SCROLL/1	2/SCROLL/1	2/SCROLL/1
Compressor RLA / LRA	13.1/83.1	6.1/41.0	4.4/33.0	14.5/98.0	6.3/55.0	6.0/41.0
ELECTRICAL DATA						
Voltage-Phase-Frequency	208/230-3-60	460-3-60	575-3-60	208/230-3-60	460-3-60	575-3-60
Indoor Blower FLA	10.9	7.2	5	10.9	7.2	5
Max External Static (In. W.C.)	2	2	2	2	2	2
Outdoor Fan FLA	2	0.85	0.67	2	0.85	0.67
Min. Circuit Ampacity[1]	44.5/44.5	22.6	16.1	47.5/47.5	23.2	19.9
Max. Overcurrent Protection (A)[2]	50/50	25	20	60/60	25	25
Power Supply Conduit Hole Dia. (in)	1.375	1.375	1.375	1.375	1.375	1.375
Low-VoltageConduit Hole Dia. (in)	0.375	0.375	0.375	0.375	0.375	0.375
OPERATING WEIGHT (LBS.)						
Operating Weight (lbs)	1087	1087	1087	1098	1098	1098
SHIPPING WEIGHT (LBS.)						
Ship Weight (lbs)	1162	1162	1162	1173	1173	1173

[1] Wire size should be determined in accordance with National Electrical Codes. Extensive wire runs will require larger wire sizes.
[2] May use fuses or HACR-type circuit breakers of the same size as noted.
Note: Always check the S&R plate for electrical data on the unit being installed.

Model	DRC1203W000001	DRC1204W000001	DRC1207W000001	DRC1503W000001	DRC1504W000001	DRC1507W000001
COOLING CAPACITY						
Total, BTU/h	115,000	115,000	115,000	137,000	137,000	137,000
IEER / EER	17/12.2	17/12.2	17/12.2	16/11.7	16/11.7	16/11.7
AHRI Reference #	206913016	206913016	206913016	206913018	206913018	206913018
EVAPORATOR MOTOR COIL						
Motor Type	DIRECT DRIVE	DIRECT DRIVE	DIRECT DRIVE	DIRECT DRIVE	DIRECT DRIVE	DIRECT DRIVE
External Static Pressure (ESP)	2.0 IN.W.G.	2.0 IN.W.G.	2.0 IN.W.G.	2.0 IN.W.G.	2.0 IN.W.G.	2.0 IN.W.G.
Wheel Dia. X Width	Ø15.12 X 15.00	Ø15.12 X 15.00	Ø15.12 X 15.00	Ø15.12 X 15.00	Ø15.12 X 15.00	Ø15.12 X 15.00
Indoor Nominal CFM	3550	3550	3550	3800	3800	3800
RPM	1300	1300	1300	1300	1300	1300
Indoor Horsepower	3.5	3.5	3.5	5	5	5
Filter Size (in)	20x25x2(2) + 25x25x2(2)	20x25x2(2) + 25x25x2(2)	20x25x2(2) + 25x25x2(2)	25x25x2(4)	25x25x2(4)	25x25x2(4)
Drain Size (NPT)	¾	¾	¾	¾	¾	¾
R-410A Refrigerant Charge (oz.)	184/180	184/180	184/180	190/188	190/188	190/188
Evaporator Coil Face Area (ft^2)	16.6	16.6	16.6	19.1	19.1	19.1
Rows Deep/ Fins per Inch	4/16	4/16	4/16	4/16	4/16	4/16
CONDENSER FAN/COIL						
Quantity of Condenser Fan Motors	2	2	2	2	2	2
RPM (High/Low stage)	1122	1050	1050	1122	1050	1050
Outdoor Horsepower	1/3	1/3	1/3	1/3	1/3	1/3
Fan Diameter/ # Fan Blades	22/3	22/3	22/3	22/3	22/3	22/3
Face Area (ft^2)	39.6	39.6	39.6	43.8	43.8	43.8
Rows Deep / Fins per Inch	2/28±1	2/28±1	2/28±1	2/28±1	2/28±1	2/28±1
COMPRESSOR						
Quantity / Type / Stages	2/SCROLL/1	2/SCROLL/1	2/SCROLL/1	2/SCROLL/1	2/SCROLL/1	2/SCROLL/1
Compressor RLA / LRA	15.9/110	7.1/52.0	5.1/39.5	19/123.0	9.7/62.0	7.4/50.0
ELECTRICAL DATA						
Voltage-Phase-Frequency	208/230-3-60	460-3-60	575-3-60	208/230-3-60	460-3-60	575-3-60
Indoor Blower FLA	10.9	7.2	5	14.5	10.6	7.2
Max External Static (In. W.C.)	2	2	2	2	2	2
Outdoor Fan FLA	2	0.85	0.67	2	0.85	0.67
Min. Circuit Ampacity[1]	50.7/50.7	24.8	17.9	64.3/64.3	35.7	30.9
Max. Overcurrent Protection (A)[2]	60/60	30	20	80/80	45	35
Power Supply Conduit Hole Dia. (in)	1.375	1.375	1.375	1.375	1.375	1.375
Low-VoltageConduit Hole Dia. (in)	0.375	0.375	0.375	0.375	0.375	0.375
OPERATING WEIGHT (LBS.)						
Operating Weight (lbs)	1117	1117	1117	1202	1202	1202
SHIPPING WEIGHT (LBS.)						
Ship Weight (lbs)	1192	1192	1192	1277	1277	1277

[1] Wire size should be determined in accordance with National Electrical Codes. Extensive wire runs will require larger wire sizes.
[2] May use fuses or HACR-type circuit breakers of the same size as noted.
Note: Always check the S&R plate for electrical data on the unit being installed.

Coil Dimensions

Model	Tons	Fin height in.	Fin length in.
DRC	7.5	34.6	53.1
	8.5	45.0	53.1
	10	45.0	53.1
	12.5	52.0	53.1

AHRI Ratings

MODEL	CAPACITY	EER	IEER
DRC090	90,000	12.4	17
DRC102	102,000	12.3	17
DRC120	115,000	12.2	17
DRC150	137,000	11.7	16

Sound Data

Model	Outdoor sound (dB) at 60 Hz								
	A-Weighted	63	125	250	500	1000	2000	4000	8000
090	82.9	91.5	84.1	82	79.7	77.6	75.2	71.7	69
102	80.2	89.1	81.1	78.7	77.1	76.1	70.8	66.5	64.1
120	81.8	91.9	82.8	81.9	79.1	76.9	72.9	68.3	66
150	80.5	90.9	84.2	78.5	77.6	75.9	71.3	67.7	64.7

Notes:

[1] Outdoor sound data is measured in accordance with AHRI standard 270.

[2] Measurements are expressed in terms of sound power. Do not compare these values to sound pressure values because sound pressure depends on specific environment factors which normally do not match individual applications. Sound power values are independent of the environment and therefore more accurate.

[3] A-weighted sound ratings filter out high and very low frequencies, to better approximate the response of "average" human ear. A-weighted measurements for Daikin units are taken in accordance with AHRI standard 270.

			Outdoor Ambient Temperature																							
			65				75				85				95				105				115			
			Entering Indoor Wet Bulb Temperature																							
IDB	Airflow	ID WB	59	63	67	71	59	63	67	71	59	63	67	71	59	63	67	71	59	63	67	71	59	63	67	71
70	2625	MBh	91.6	92.9	95.6	-	90.7	92.0	94.8	-	88.4	89.6	92.4	-	84.2	85.5	88.3	-	79.2	80.5	83.2	-	74.6	75.9	78.7	-
		S/T	0.61	0.53	0.40	-	0.61	0.54	0.40	-	0.64	0.56	0.43	-	1.00	0.58	0.45	-	1.00	0.60	0.47	-	1.00	0.66	0.52	-
		ΔT	19.78	17.95	14.54	-	19.73	17.90	14.49	-	19.99	18.16	14.74	-	19.71	17.88	14.47	-	19.47	17.64	14.22	-	20.62	18.79	15.37	-
		kW	5.25	5.24	5.23	-	5.86	5.86	5.85	-	6.55	6.55	6.54	-	7.30	7.29	7.28	-	8.13	8.13	8.12	-	9.11	9.10	9.09	-
		Amps	20.88	20.85	20.81	-	23.70	23.68	23.63	-	26.85	26.83	26.78	-	30.26	30.24	30.19	-	34.07	34.05	34.00	-	38.55	38.52	38.47	-
		Hi PR	241	242	243	-	279	280	281	-	318	319	321	-	361	362	364	-	407	408	410	-	457	458	459	-
		Lo PR	126	127	130	-	133	135	138	-	140	142	145	-	146	147	150	-	151	153	156	-	158	160	163	-
	3000	MBh	92.8	94.1	96.8	-	91.9	93.2	96.0	-	89.6	90.9	93.6	-	85.4	86.7	89.5	-	80.4	81.7	84.4	-	75.8	77.1	79.9	-
		S/T	0.67	0.59	0.46	-	0.67	0.60	0.46	-	0.70	0.62	0.49	-	1.00	0.64	0.51	-	1.00	0.66	0.53	-	1.00	0.72	0.58	-
		ΔT	18.68	16.85	13.43	-	18.63	16.80	13.38	-	18.88	17.06	13.64	-	18.61	16.78	13.36	-	18.36	16.53	13.12	-	19.51	17.68	14.26	-
		kW	5.28	5.27	5.26	-	5.90	5.89	5.88	-	6.58	6.58	6.57	-	7.33	7.33	7.31	-	8.16	8.16	8.15	-	9.14	9.13	9.12	-
		Amps	21.02	21.00	20.95	-	23.85	23.82	23.78	-	27.00	26.98	26.93	-	30.41	30.39	30.34	-	34.22	34.20	34.15	-	38.69	38.67	38.62	-
		Hi PR	243	244	245	-	281	282	283	-	320	321	323	-	363	364	366	-	409	411	412	-	459	460	462	-
		Lo PR	128	129	132	-	135	137	140	-	142	143	147	-	148	149	152	-	153	155	158	-	160	162	165	-
	3375	MBh	94.2	95.5	98.2	-	93.4	94.7	97.4	-	91.0	92.3	95.0	-	86.9	88.2	90.9	-	81.9	83.2	85.9	-	77.3	78.6	81.3	-
		S/T	0.70	0.63	0.49	-	0.71	0.63	0.50	-	1.00	0.66	0.52	-	1.00	0.68	0.54	-	1.00	0.70	0.56	-	1.00	1.00	0.61	-
		ΔT	17.75	15.92	12.50	-	17.70	15.87	12.45	-	17.95	16.12	12.71	-	17.68	15.85	12.43	-	17.43	15.60	12.19	-	18.58	16.75	13.33	-
		kW	5.31	5.30	5.29	-	5.92	5.92	5.91	-	6.61	6.61	6.60	-	7.36	7.35	7.34	-	8.19	8.18	8.17	-	9.17	9.16	9.15	-
		Amps	21.15	21.12	21.08	-	23.97	23.95	23.90	-	27.12	27.10	27.05	-	30.53	30.51	30.46	-	34.34	34.32	34.27	-	38.81	38.79	38.74	-
		Hi PR	245	246	247	-	283	284	285	-	322	323	325	-	365	366	368	-	411	413	414	-	461	462	463	-
		Lo PR	130	131	134	-	137	139	142	-	144	145	149	-	150	151	154	-	155	157	160	-	162	164	167	-
75	2625	MBh	91.6	92.9	95.6	99.8	90.8	92.1	94.8	99.0	88.4	89.7	92.4	96.6	84.3	85.6	88.3	92.5	79.3	80.6	83.3	87.5	74.7	76.0	78.7	82.9
		S/T	0.74	0.66	0.52	0.4	1.00	0.67	0.53	0.4	1.00	0.69	0.56	0.4	1.00	0.71	0.58	0.4	1.00	0.73	0.60	0.5	1.00	1.00	0.65	0.5
		ΔT	23.81	21.98	18.56	15.0	23.76	21.93	18.51	15.0	24.01	22.18	18.77	15.2	23.74	21.91	18.49	15.0	23.49	21.66	18.25	14.7	24.64	22.81	19.39	15.9
		kW	5.24	5.24	5.23	5.3	5.86	5.86	5.84	5.9	6.55	6.54	6.53	6.6	7.29	7.29	7.28	7.3	8.13	8.12	8.11	8.2	9.10	9.10	9.09	9.1
		Amps	20.86	20.84	20.79	21.0	23.68	23.66	23.61	23.8	26.83	26.81	26.76	27.0	30.24	30.22	30.17	30.4	34.06	34.03	33.99	34.2	38.53	38.50	38.46	38.7
		Hi PR	241	242	244	247.8	279	280	282	285.8	319	320	321	325.5	361	363	364	368.4	408	409	410	414.6	457	458	460	463.9
		Lo PR	126	127	130	135.8	133	135	138	143.5	140	142	145	150.2	146	147	150	155.8	151	153	156	161.4	158	160	163	168.3
	3000	MBh	92.8	94.1	96.8	101.0	92.0	93.3	96.0	100.2	89.6	90.9	93.6	97.8	85.5	**86.8**	89.5	93.7	80.5	81.8	84.5	88.7	75.9	77.2	79.9	84.1
		S/T	0.80	0.72	0.58	0.4	1.00	0.73	0.59	0.4	1.00	0.75	0.62	0.5	1.00	**0.77**	0.64	0.5	1.00	1.00	0.66	0.5	1.00	1.00	0.71	0.6
		ΔT	22.70	20.87	17.45	13.9	22.65	20.82	17.40	13.9	22.91	21.08	17.66	14.1	22.63	**20.80**	17.39	13.8	22.39	20.56	17.14	13.6	23.53	21.70	18.29	14.7
		kW	5.27	5.27	5.26	5.3	5.89	5.89	5.88	5.9	6.58	6.58	6.57	6.6	7.33	**7.32**	7.31	7.4	8.16	8.15	8.14	8.2	9.14	9.13	9.12	9.2
		Amps	21.00	20.98	20.93	21.2	23.83	23.81	23.76	24.0	26.98	26.96	26.91	27.1	30.39	**30.37**	30.32	30.5	34.20	34.18	34.13	34.3	38.67	38.65	38.60	38.8
		Hi PR	243	244	246	249.8	281	282	284	287.8	321	322	323	327.6	364	**365**	366	370.4	410	411	412	416.6	459	460	462	465.9
		Lo PR	128	129	132	137.7	135	137	140	145.3	142	143	147	152.0	148	**149**	152	157.7	153	155	158	163.2	160	162	165	170.2
	3375	MBh	94.3	95.6	98.3	102.5	93.4	94.7	97.5	101.7	91.1	92.3	95.1	99.3	86.9	88.2	91.0	95.1	81.9	83.2	85.9	90.1	77.3	78.6	81.4	85.5
		S/T	0.83	0.75	0.62	0.5	1.00	0.76	0.62	0.5	1.00	0.79	0.65	0.5	1.00	0.81	0.67	0.5	1.00	1.00	0.69	0.5	1.00	1.00	0.74	0.6
		ΔT	21.77	19.94	16.52	13.0	21.72	19.89	16.47	12.9	21.98	20.15	16.73	13.2	21.70	19.87	16.46	12.9	21.46	19.63	16.21	12.7	22.60	20.77	17.36	13.8
		kW	5.30	5.30	5.29	5.3	5.92	5.91	5.90	6.0	6.61	6.60	6.59	6.6	7.35	7.35	7.34	7.4	8.19	8.18	8.17	8.2	9.16	9.16	9.15	9.2
		Amps	21.13	21.11	21.06	21.3	23.95	23.93	23.88	24.1	27.10	27.08	27.03	27.2	30.51	30.49	30.44	30.7	34.33	34.30	34.25	34.5	38.80	38.77	38.73	38.9
		Hi PR	245	246	248	251.8	283	284	286	289.8	323	324	325	329.6	365	367	368	372.4	412	413	414	418.6	461	462	464	467.9
		Lo PR	130	131	134	139.7	137	139	142	147.4	144	145	149	154.1	150	151	154	159.7	155	157	160	165.3	162	164	167	172.2

IDB: Entering Indoor Dry Bulb Temperature

Shaded area reflects ACCA (TVA) conditions

kW = Total system power

High and low pressures are measured at the liquid and suction access fittings.

Amps: Unit amps (comp.+ evaporator + condenser fan motors)

Design Subcooling, 16 - 19 °F @ the liquid access fitting connection ARI 95 test conditions. Design Superheat 8 - 12°F @ the compressor suction access fitting connection.

			Outdoor Ambient Temperature																							
			65				75				85				95				105				115			
			Entering Indoor Wet Bulb Temperature																							
IDB	Airflow	ID WB	59	63	67	71	59	63	67	71	59	63	67	71	59	63	67	71	59	63	67	71	59	63	67	71
80	2625	MBh	92.1	93.4	96.1	100.3	91.3	92.6	95.3	99.5	88.9	90.2	92.9	97.1	84.8	86.1	88.8	93.0	79.7	81.0	83.8	87.9	75.2	76.4	79.2	83.4
		S/T	1.00	0.79	0.65	0.5	1.00	0.79	0.66	0.5	1.00	0.82	0.68	0.5	1.00	1.00	0.70	0.6	1.00	1.00	0.72	0.6	1.00	1.00	0.77	0.6
		ΔT	27.86	26.03	22.61	19.1	27.81	25.98	22.56	19.0	28.06	26.23	22.82	19.3	27.79	25.96	22.54	19.0	27.54	25.71	22.30	18.8	28.69	26.86	23.44	19.9
		kW	5.25	5.24	5.23	5.3	5.86	5.86	5.85	5.9	6.55	6.55	6.54	6.6	7.30	7.29	7.28	7.3	8.13	8.12	8.11	8.2	9.11	9.10	9.09	9.1
		Amps	20.87	20.85	20.80	21.0	23.70	23.67	23.63	23.8	26.85	26.83	26.78	27.0	30.26	30.24	30.19	30.4	34.07	34.05	34.00	34.2	38.54	38.52	38.47	38.7
		Hi PR	241	242	244	248.2	279	280	282	286.2	319	320	322	326.0	362	363	365	368.8	408	409	411	415.0	457	458	460	464.3
		Lo PR	126	128	131	136.4	134	135	139	144.0	141	142	145	150.7	146	148	151	156.4	152	153	157	161.9	159	160	164	168.9
	3000	MBh	93.3	94.6	97.3	101.5	92.5	93.8	96.5	100.7	90.1	91.4	94.1	98.3	86.0	87.3	**90.0**	94.2	80.9	82.2	85.0	89.2	76.4	77.6	80.4	84.6
		S/T	1.00	0.85	0.71	0.6	1.00	0.85	0.72	0.6	1.00	0.88	0.74	0.6	1.00	1.00	**0.76**	0.6	1.00	1.00	0.78	0.6	1.00	1.00	0.83	0.7
		ΔT	26.75	24.92	21.50	18.0	26.70	24.87	21.45	17.9	26.96	25.13	21.71	18.2	26.68	24.85	**21.44**	17.9	26.44	24.61	21.19	17.7	27.58	25.75	22.34	18.8
		kW	5.28	5.27	5.26	5.3	5.90	5.89	5.88	5.9	6.58	6.58	6.57	6.6	7.33	7.32	**7.31**	7.4	8.16	8.16	8.15	8.2	9.14	9.13	9.12	9.2
		Amps	21.02	21.00	20.95	21.2	23.84	23.82	23.77	24.0	27.00	26.97	26.92	27.1	30.41	30.38	**30.34**	30.6	34.22	34.19	34.15	34.4	38.69	38.67	38.62	38.8
		Hi PR	243	244	246	250.3	281	282	284	288.3	321	322	324	328.0	364	365	**367**	370.9	410	411	413	417.1	459	460	462	466.4
		Lo PR	128	130	133	138.2	136	137	141	145.9	142	144	147	152.6	148	150	**153**	158.2	154	155	158	163.8	161	162	165	170.7
	3375	MBh	94.7	96.0	98.8	102.9	93.9	95.2	97.9	102.1	91.5	92.8	95.6	99.7	87.4	88.7	91.4	95.6	82.4	83.7	86.4	90.6	77.8	79.1	81.8	86.0
		S/T	1.00	0.88	0.74	0.6	1.00	0.89	0.75	0.6	1.00	1.00	0.78	0.6	1.00	1.00	0.80	0.7	1.00	1.00	0.82	0.7	1.00	1.00	1.00	0.7
		ΔT	25.82	23.99	20.57	17.0	25.77	23.94	20.52	17.0	26.03	24.20	20.78	17.2	25.75	23.92	20.51	17.0	25.51	23.68	20.26	16.7	26.65	24.82	21.41	17.9
		kW	5.31	5.30	5.29	5.3	5.92	5.92	5.91	6.0	6.61	6.61	6.60	6.6	7.36	7.35	7.34	7.4	8.19	8.18	8.17	8.2	9.17	9.16	9.15	9.2
		Amps	21.14	21.12	21.07	21.3	23.97	23.94	23.90	24.1	27.12	27.10	27.05	27.3	30.53	30.51	30.46	30.7	34.34	34.32	34.27	34.5	38.81	38.79	38.74	39.0
		Hi PR	245	246	248	252.3	283	284	286	290.2	323	324	326	330.0	366	367	369	372.9	412	413	415	419.0	461	462	464	468.3
		Lo PR	130	132	135	140.3	138	139	143	147.9	145	146	149	154.6	150	152	155	160.3	156	157	160	165.8	163	164	167	172.8
85	2625	MBh	93.6	94.9	97.7	101.8	92.8	94.1	96.8	101.0	90.4	91.7	94.5	98.6	86.3	87.6	90.3	94.5	81.3	82.6	85.3	89.5	76.7	78.0	80.7	84.9
		S/T	1.00	0.89	0.75	0.6	1.00	1.00	0.76	0.6	1.00	1.00	0.78	0.6	1.00	1.00	0.80	0.7	1.00	1.00	1.00	0.7	1.00	1.00	1.00	0.7
		ΔT	31.45	29.62	26.20	22.7	31.40	29.57	26.15	22.6	31.65	29.82	26.41	22.9	31.38	29.55	26.13	22.6	31.13	29.30	25.89	22.3	32.28	30.45	27.03	23.5
		kW	5.26	5.25	5.24	5.3	5.87	5.87	5.86	5.9	6.56	6.56	6.55	6.6	7.31	7.30	7.29	7.3	8.14	8.14	8.13	8.2	9.12	9.11	9.10	9.2
		Amps	20.93	20.90	20.86	21.1	23.75	23.73	23.68	23.9	26.90	26.88	26.83	27.0	30.31	30.29	30.24	30.5	34.12	34.10	34.05	34.3	38.60	38.57	38.53	38.7
		Hi PR	242	243	245	249.4	280	281	283	287.3	320	321	323	327.1	363	364	366	370.0	409	410	412	416.1	459	460	461	465.4
		Lo PR	128	130	133	138.3	136	137	141	145.9	142	144	147	152.6	148	150	153	158.3	154	155	158	163.8	161	162	165	170.8
	3000	MBh	94.8	96.1	98.9	103.0	94.0	95.3	98.0	102.2	91.6	92.9	95.7	99.8	87.5	88.8	91.5	95.7	82.5	83.8	86.5	90.7	77.9	79.2	81.9	86.1
		S/T	1.00	0.95	0.81	0.7	1.00	1.00	0.82	0.7	1.00	1.00	0.84	0.7	1.00	1.00	0.86	0.7	1.00	1.00	1.00	0.7	1.00	1.00	1.00	0.8
		ΔT	30.34	28.51	25.10	21.6	30.29	28.46	25.05	21.5	30.55	28.72	25.30	21.8	30.27	28.44	25.03	21.5	30.03	28.20	24.78	21.2	31.17	29.34	25.93	22.4
		kW	5.29	5.29	5.27	5.3	5.91	5.90	5.89	5.9	6.60	6.59	6.58	6.6	7.34	7.34	7.33	7.4	8.17	8.17	8.16	8.2	9.15	9.15	9.14	9.2
		Amps	21.07	21.05	21.00	21.2	23.90	23.87	23.83	24.0	27.05	27.03	26.98	27.2	30.46	30.44	30.39	30.6	34.27	34.25	34.20	34.4	38.74	38.72	38.67	38.9
		Hi PR	244	246	247	251.4	282	283	285	289.4	322	323	325	329.2	365	366	368	372.0	411	412	414	418.2	461	462	463	467.5
		Lo PR	130	132	135	140.1	138	139	142	147.7	144	146	149	154.4	150	152	155	160.1	156	157	160	165.7	163	164	167	172.6
	3375	MBh	96.3	97.6	100.3	104.5	95.5	96.8	99.5	103.7	93.1	94.4	97.1	101.3	89.0	90.3	93.0	97.2	83.9	85.2	88.0	92.1	79.3	80.6	83.4	87.5
		S/T	1.00	0.98	0.85	0.7	1.00	1.00	0.85	0.7	1.00	1.00	0.88	0.7	1.00	1.00	0.90	0.8	1.00	1.00	1.00	0.8	1.00	1.00	1.00	0.8
		ΔT	29.41	27.58	24.17	20.6	29.36	27.53	24.12	20.6	29.62	27.79	24.37	20.8	29.34	27.51	24.10	20.6	29.10	27.27	23.85	20.3	30.24	28.41	25.00	21.5
		kW	5.32	5.31	5.30	5.3	5.93	5.93	5.92	6.0	6.62	6.62	6.61	6.7	7.37	7.36	7.35	7.4	8.20	8.20	8.19	8.2	9.18	9.17	9.16	9.2
		Amps	21.20	21.17	21.13	21.3	24.02	24.00	23.95	24.2	27.17	27.15	27.10	27.3	30.58	30.56	30.51	30.7	34.39	34.37	34.32	34.5	38.87	38.84	38.79	39.0
		Hi PR	246	248	249	253.4	284	285	287	291.4	324	325	327	331.2	367	368	370	374.0	413	414	416	420.2	463	464	465	469.5
		Lo PR	132	134	137	142.1	140	141	144	149.8	146	148	151	156.5	152	154	157	162.2	158	159	162	167.7	165	166	169	174.7

IDB: Entering Indoor Dry Bulb Temperature

Shaded area reflects ACCA (TVA) conditions

kW = Total system power

High and low pressures are measured at the liquid and suction access fittings.

Amps: Unit amps (comp.+ evaporator + condenser fan motors)

Design Subcooling, 16 - 19 °F @ the liquid access fitting connection ARI 95 test conditions. Design Superheat 8 - 12°F @ the compressor suction access fitting connection.

			Outdoor Ambient Temperature																							
			65				75				85				95				105				115			
			Entering Indoor Wet Bulb Temperature																							
IDB	Airflow	ID WB	59	63	67	71	59	63	67	71	59	63	67	71	59	63	67	71	59	63	67	71	59	63	67	71
70	3100	MBh	105.1	106.6	109.7	-	104.2	105.7	108.8	-	101.5	103.0	106.1	-	96.8	98.3	101.4	-	91.1	92.6	95.7	-	85.9	87.4	90.5	-
		S/T	0.65	0.58	0.44	-	0.66	0.58	0.45	-	0.68	0.61	0.47	-	1.00	0.63	0.49	-	1.00	0.65	0.51	-	1.00	0.70	0.56	-
		ΔT	18.48	16.67	13.29	-	18.43	16.62	13.24	-	18.68	16.87	13.49	-	18.41	16.60	13.22	-	18.17	16.36	12.98	-	19.30	17.49	14.11	-
		kW	6.06	6.06	6.05	-	6.76	6.75	6.74	-	7.53	7.53	7.52	-	8.37	8.37	8.36	-	9.31	9.31	9.29	-	10.41	10.41	10.40	-
		Amps	23.22	23.20	23.14	-	26.40	26.38	26.32	-	29.96	29.93	29.88	-	33.80	33.77	33.72	-	38.09	38.07	38.01	-	43.13	43.11	43.05	-
		Hi PR	254	255	257	-	293	295	296	-	335	336	338	-	380	381	383	-	428	429	431	-	480	481	483	-
		Lo PR	126	127	131	-	133	135	138	-	140	142	145	-	146	147	150	-	151	153	156	-	158	160	163	-
	3400	MBh	106.4	107.8	110.9	-	105.4	106.9	110.0	-	102.7	104.2	107.3	-	98.1	99.5	102.6	-	92.4	93.8	96.9	-	87.2	88.6	91.7	-
		S/T	0.68	0.60	0.47	-	0.68	0.61	0.48	-	0.71	0.63	0.50	-	1.00	0.65	0.52	-	1.00	0.67	0.54	-	1.00	0.72	0.59	-
		ΔT	17.75	15.94	12.56	-	17.70	15.89	12.51	-	17.96	16.15	12.77	-	17.68	15.87	12.50	-	17.44	15.63	12.25	-	18.58	16.77	13.39	-
		kW	6.09	6.08	6.07	-	6.78	6.78	6.76	-	7.56	7.55	7.54	-	8.40	8.39	8.38	-	9.34	9.33	9.32	-	10.44	10.43	10.42	-
		Amps	23.33	23.31	23.25	-	26.51	26.49	26.43	-	30.06	30.04	29.98	-	33.91	33.88	33.83	-	38.20	38.18	38.12	-	43.24	43.21	43.16	-
		Hi PR	255	256	258	-	295	296	298	-	337	338	340	-	381	383	384	-	430	431	433	-	481	482	484	-
		Lo PR	127	129	132	-	135	137	140	-	142	143	146	-	147	149	152	-	153	154	157	-	160	161	164	-
	3825	MBh	108.5	109.9	113.0	-	107.5	109.0	112.1	-	104.8	106.3	109.4	-	100.2	101.6	104.7	-	94.5	95.9	99.0	-	89.3	90.7	93.8	-
		S/T	0.69	0.62	0.49	-	0.70	0.63	0.49	-	1.00	0.65	0.52	-	1.00	0.67	0.54	-	1.00	0.69	0.56	-	1.00	1.00	0.61	-
		ΔT	16.84	15.03	11.65	-	16.79	14.98	11.60	-	17.05	15.24	11.86	-	16.77	14.96	11.58	-	16.53	14.72	11.34	-	17.66	15.85	12.48	-
		kW	6.12	6.11	6.10	-	6.81	6.81	6.79	-	7.59	7.58	7.57	-	8.43	8.42	8.41	-	9.37	9.36	9.35	-	10.47	10.46	10.45	-
		Amps	23.47	23.44	23.39	-	26.65	26.62	26.57	-	30.20	30.18	30.12	-	34.04	34.02	33.96	-	38.34	38.31	38.26	-	43.38	43.35	43.30	-
		Hi PR	258	259	261	-	297	298	300	-	339	340	342	-	384	385	387	-	432	433	435	-	484	485	486	-
		Lo PR	130	131	135	-	137	139	142	-	144	146	149	-	150	151	154	-	155	157	160	-	162	164	167	-
75	3100	MBh	105.2	106.7	109.8	114.5	104.3	105.7	108.8	113.6	101.6	103.0	106.1	110.9	96.9	98.4	101.5	106.2	91.2	92.7	95.8	100.5	86.0	87.5	90.6	95.3
		S/T	0.78	0.70	0.57	0.4	1.00	0.71	0.58	0.4	1.00	0.73	0.60	0.5	1.00	0.75	0.62	0.5	1.00	0.77	0.64	0.5	1.00	1.00	0.69	0.6
		ΔT	22.46	20.65	17.27	13.8	22.41	20.60	17.22	13.7	22.66	20.85	17.47	14.0	22.39	20.58	17.20	13.7	22.15	20.34	16.96	13.5	23.28	21.47	18.09	14.6
		kW	6.06	6.05	6.04	6.1	6.75	6.75	6.74	6.8	7.53	7.52	7.51	7.6	8.37	8.36	8.35	8.4	9.31	9.30	9.29	9.3	10.41	10.40	10.39	10.4
		Amps	23.20	23.18	23.12	23.4	26.38	26.36	26.30	26.5	29.93	29.91	29.86	30.1	33.78	33.75	33.70	33.9	38.07	38.05	37.99	38.2	43.11	43.08	43.03	43.3
		Hi PR	254	255	257	261.2	294	295	297	300.9	335	336	338	342.5	380	381	383	387.3	428	429	431	435.6	480	481	483	487.1
		Lo PR	126	127	131	135.9	133	135	138	143.5	140	142	145	150.1	146	147	150	155.7	151	153	156	161.2	158	160	163	168.0
	3400	MBh	106.4	107.9	111.0	115.7	105.5	107.0	110.1	114.8	102.8	104.3	107.4	112.1	98.1	**99.6**	102.7	107.4	92.4	93.9	97.0	101.7	87.2	88.7	91.8	96.5
		S/T	0.80	0.73	0.60	0.5	1.00	0.74	0.60	0.5	1.00	0.76	0.63	0.5	1.00	**0.78**	0.65	0.5	1.00	0.80	0.67	0.5	1.00	1.00	0.72	0.6
		ΔT	21.73	19.92	16.54	13.0	21.68	19.87	16.49	13.0	21.94	20.13	16.75	13.2	21.66	**19.85**	16.47	13.0	21.42	19.61	16.23	12.7	22.56	20.75	17.37	13.9
		kW	6.08	6.08	6.06	6.1	6.78	6.77	6.76	6.8	7.55	7.55	7.54	7.6	8.39	**8.39**	8.38	8.4	9.33	9.33	9.31	9.4	10.43	10.43	10.41	10.5
		Amps	23.31	23.29	23.23	23.5	26.49	26.47	26.41	26.7	30.04	30.02	29.96	30.2	33.89	**33.86**	33.81	34.1	38.18	38.16	38.10	38.3	43.22	43.19	43.14	43.4
		Hi PR	256	257	258	262.8	295	296	298	302.5	337	338	340	344.1	382	**383**	385	388.9	430	431	433	437.2	482	483	484	488.7
		Lo PR	127	129	132	137.5	135	137	140	145.0	142	143	146	151.6	147	**149**	152	157.2	153	154	157	162.7	160	161	164	169.6
	3825	MBh	108.5	110.0	113.1	117.8	107.6	109.1	112.2	116.9	104.9	106.4	109.5	114.2	100.2	101.7	104.8	109.5	94.5	96.0	99.1	103.8	89.3	90.8	93.9	98.6
		S/T	0.82	0.75	0.61	0.5	1.00	0.75	0.62	0.5	1.00	0.78	0.64	0.5	1.00	0.80	0.66	0.5	1.00	1.00	0.68	0.5	1.00	1.00	0.73	0.6
		ΔT	20.82	19.01	15.63	12.1	20.77	18.96	15.58	12.1	21.02	19.22	15.84	12.3	20.75	18.94	15.56	12.1	20.51	18.70	15.32	11.8	21.64	19.83	16.45	13.0
		kW	6.11	6.11	6.09	6.1	6.81	6.80	6.79	6.8	7.58	7.58	7.57	7.6	8.42	8.42	8.41	8.5	9.36	9.36	9.34	9.4	10.46	10.46	10.44	10.5
		Amps	23.45	23.42	23.37	23.6	26.63	26.60	26.55	26.8	30.18	30.16	30.10	30.3	34.02	34.00	33.94	34.2	38.32	38.29	38.24	38.5	43.36	43.33	43.28	43.5
		Hi PR	258	259	261	265.1	298	299	300	304.9	339	340	342	346.4	384	385	387	391.2	432	433	435	439.5	484	485	487	491.1
		Lo PR	130	131	135	139.9	138	139	142	147.5	144	146	149	154.1	150	151	154	159.7	155	157	160	165.2	162	164	167	172.0

IDB: Entering Indoor Dry Bulb Temperature

Shaded area reflects ACCA (TVA) conditions

kW = Total system power

High and low pressures are measured at the liquid and suction access fittings.

Amps: Unit amps (comp.+ evaporator + condenser fan motors)

Design Subcooling, 16 - 19 °F @ the liquid access fitting connection ARI 95 test conditions. Design Superheat 8 - 12°F @ the compressor suction access fitting connection.

			Outdoor Ambient Temperature																							
			65				75				85				95				105				115			
			Entering Indoor Wet Bulb Temperature																							
IDB	Airflow	ID WB	59	63	67	71	59	63	67	71	59	63	67	71	59	63	67	71	59	63	67	71	59	63	67	71
80	3100	MBh	105.7	107.2	110.3	115.0	104.8	106.3	109.4	114.1	102.1	103.6	106.7	111.4	97.4	98.9	102.0	106.7	91.7	93.2	96.3	101.0	86.5	88.0	91.1	95.8
		S/T	1.00	0.82	0.69	0.6	1.00	0.83	0.70	0.6	1.00	0.85	0.72	0.6	1.00	1.00	0.74	0.6	1.00	1.00	0.76	0.6	1.00	1.00	0.81	0.7
		ΔT	26.46	24.65	21.27	17.8	26.41	24.60	21.22	17.7	26.67	24.86	21.48	18.0	26.39	24.58	21.20	17.7	26.15	24.34	20.96	17.5	27.29	25.48	22.10	18.6
		kW	6.06	6.06	6.04	6.1	6.76	6.75	6.74	6.8	7.53	7.53	7.52	7.6	8.37	8.37	8.36	8.4	9.31	9.31	9.29	9.3	10.41	10.41	10.39	10.4
		Amps	23.22	23.19	23.14	23.4	26.40	26.38	26.32	26.6	29.95	29.93	29.87	30.1	33.79	33.77	33.72	34.0	38.09	38.06	38.01	38.3	43.13	43.10	43.05	43.3
		Hi PR	254	256	257	261.7	294	295	297	301.4	336	337	339	343.0	381	382	383	387.8	429	430	432	436.1	480	481	483	487.6
		Lo PR	126	128	131	136.5	134	136	139	144.0	141	142	145	150.6	146	148	151	156.2	152	153	156	161.7	159	160	163	168.6
	3400	MBh	107.0	108.4	111.5	116.3	106.0	107.5	110.6	115.3	103.3	104.8	107.9	112.6	98.7	100.1	**103.2**	108.0	93.0	94.4	97.5	102.3	87.8	89.2	92.3	97.1
		S/T	1.00	0.85	0.72	0.6	1.00	0.86	0.73	0.6	1.00	0.88	0.75	0.6	1.00	1.00	**0.77**	0.6	1.00	1.00	0.79	0.7	1.00	1.00	0.84	0.7
		ΔT	25.74	23.93	20.55	17.0	25.69	23.88	20.50	17.0	25.94	24.13	20.75	17.3	25.67	23.86	**20.48**	17.0	25.43	23.62	20.24	16.7	26.56	24.75	21.37	17.9
		kW	6.09	6.08	6.07	6.1	6.78	6.78	6.76	6.8	7.56	7.55	7.54	7.6	8.40	8.39	**8.38**	8.4	9.33	9.33	9.32	9.4	10.44	10.43	10.42	10.5
		Amps	23.33	23.30	23.25	23.5	26.51	26.48	26.43	26.7	30.06	30.04	29.98	30.2	33.90	33.88	**33.82**	34.1	38.20	38.17	38.12	38.4	43.24	43.21	43.16	43.4
		Hi PR	256	257	259	263.3	296	297	299	303.0	337	338	340	344.6	382	383	**385**	389.4	430	432	433	437.7	482	483	485	489.2
		Lo PR	128	130	133	138.0	136	137	140	145.6	142	144	147	152.2	148	149	**152**	157.8	153	155	158	163.3	160	162	165	170.1
	3825	MBh	109.1	110.5	113.6	118.4	108.1	109.6	112.7	117.4	105.4	106.9	110.0	114.7	100.8	102.2	105.3	110.1	95.1	96.5	99.6	104.4	89.9	91.3	94.4	99.2
		S/T	1.00	0.87	0.74	0.6	1.00	0.87	0.74	0.6	1.00	1.00	0.77	0.6	1.00	1.00	0.79	0.6	1.00	1.00	0.81	0.7	1.00	1.00	1.00	0.7
		ΔT	24.83	23.02	19.64	16.1	24.78	22.97	19.59	16.1	25.03	23.22	19.84	16.3	24.76	22.95	19.57	16.1	24.52	22.71	19.33	15.8	25.65	23.84	20.46	17.0
		kW	6.12	6.11	6.10	6.2	6.81	6.81	6.79	6.8	7.59	7.58	7.57	7.6	8.43	8.42	8.41	8.5	9.36	9.36	9.35	9.4	10.47	10.46	10.45	10.5
		Amps	23.46	23.44	23.38	23.6	26.65	26.62	26.57	26.8	30.20	30.17	30.12	30.4	34.04	34.02	33.96	34.2	38.33	38.31	38.25	38.5	43.37	43.35	43.29	43.5
		Hi PR	258	259	261	265.6	298	299	301	305.3	340	341	343	346.9	384	386	387	391.7	433	434	436	440.0	484	485	487	491.5
		Lo PR	131	132	135	140.5	138	140	143	148.0	145	146	149	154.6	150	152	155	160.2	156	157	160	165.7	163	164	167	172.6
85	3100	MBh	107.5	108.9	112.0	116.8	106.6	108.0	111.1	115.9	103.8	105.3	108.4	113.1	99.2	100.6	103.7	108.5	93.5	95.0	98.1	102.8	88.3	89.7	92.8	97.6
		S/T	1.00	0.92	0.79	0.7	1.00	1.00	0.80	0.7	1.00	1.00	0.82	0.7	1.00	1.00	0.84	0.7	1.00	1.00	0.86	0.7	1.00	1.00	1.00	0.8
		ΔT	30.02	28.21	24.83	21.3	29.97	28.16	24.78	21.3	30.22	28.41	25.03	21.5	29.95	28.14	24.76	21.3	29.71	27.90	24.52	21.0	30.84	29.03	25.65	22.1
		kW	6.08	6.07	6.06	6.1	6.77	6.76	6.75	6.8	7.55	7.54	7.53	7.6	8.39	8.38	8.37	8.4	9.32	9.32	9.31	9.4	10.43	10.42	10.41	10.5
		Amps	23.28	23.25	23.20	23.4	26.46	26.44	26.38	26.6	30.01	29.99	29.93	30.2	33.86	33.83	33.78	34.0	38.15	38.12	38.07	38.3	43.19	43.16	43.11	43.4
		Hi PR	256	257	258	262.9	295	296	298	302.6	337	338	340	344.2	382	383	385	389.0	430	431	433	437.3	482	483	484	488.8
		Lo PR	128	130	133	138.3	136	137	141	145.9	143	144	147	152.5	148	150	153	158.1	154	155	158	163.6	160	162	165	170.4
	3400	MBh	108.7	110.2	113.3	118.0	107.8	109.3	112.4	117.1	105.1	106.6	109.7	114.4	100.4	101.9	105.0	109.7	94.7	96.2	99.3	104.0	89.5	91.0	94.1	98.8
		S/T	1.00	0.95	0.82	0.7	1.00	1.00	0.82	0.7	1.00	1.00	0.85	0.7	1.00	1.00	0.87	0.7	1.00	1.00	1.00	0.7	1.00	1.00	1.00	0.8
		ΔT	29.29	27.48	24.10	20.6	29.24	27.43	24.05	20.6	29.50	27.69	24.31	20.8	29.22	27.41	24.03	20.5	28.98	27.17	23.79	20.3	30.11	28.30	24.93	21.4
		kW	6.10	6.09	6.08	6.1	6.79	6.79	6.78	6.8	7.57	7.56	7.55	7.6	8.41	8.40	8.39	8.4	9.35	9.34	9.33	9.4	10.45	10.44	10.43	10.5
		Amps	23.39	23.36	23.31	23.6	26.57	26.54	26.49	26.7	30.12	30.10	30.04	30.3	33.96	33.94	33.89	34.1	38.26	38.23	38.18	38.4	43.30	43.27	43.22	43.5
		Hi PR	257	258	260	264.5	297	298	300	304.2	339	340	341	345.8	383	384	386	390.6	432	433	434	438.9	483	484	486	490.4
		Lo PR	130	131	135	139.9	137	139	142	147.4	144	146	149	154.0	150	151	154	159.6	155	157	160	165.1	162	164	167	172.0
	3825	MBh	110.8	112.3	115.4	120.1	109.9	111.3	114.4	119.2	107.2	108.6	111.7	116.5	102.5	104.0	107.1	111.8	96.8	98.3	101.4	106.1	91.6	93.1	96.2	100.9
		S/T	1.00	0.97	0.83	0.7	1.00	1.00	0.84	0.7	1.00	1.00	0.86	0.7	1.00	1.00	0.88	0.7	1.00	1.00	1.00	0.8	1.00	1.00	1.00	0.8
		ΔT	28.38	26.57	23.19	19.7	28.33	26.52	23.14	19.6	28.58	26.77	23.40	19.9	28.31	26.50	23.12	19.6	28.07	26.26	22.88	19.4	29.20	27.39	24.01	20.5
		kW	6.13	6.12	6.11	6.2	6.82	6.82	6.81	6.9	7.60	7.59	7.58	7.6	8.44	8.43	8.42	8.5	9.38	9.37	9.36	9.4	10.48	10.47	10.46	10.5
		Amps	23.53	23.50	23.45	23.7	26.71	26.68	26.63	26.9	30.26	30.23	30.18	30.4	34.10	34.08	34.02	34.3	38.39	38.37	38.32	38.6	43.43	43.41	43.35	43.6
		Hi PR	260	261	262	266.8	299	300	302	306.5	341	342	344	348.1	386	387	388	392.9	434	435	437	441.2	485	487	488	492.7
		Lo PR	132	134	137	142.3	140	141	145	149.9	147	148	151	156.5	152	154	157	162.1	158	159	162	167.6	164	166	169	174.4

IDB: Entering Indoor Dry Bulb Temperature

Shaded area reflects ACCA (TVA) conditions

kW = Total system power

High and low pressures are measured at the liquid and suction access fittings.

Amps: Unit amps (comp.+ evaporator + condenser fan motors)

Design Subcooling, 16 - 19 °F @ the liquid access fitting connection ARI 95 test conditions. Design Superheat 8 - 12°F @ the compressor suction access fitting connection.

			Outdoor Ambient Temperature																							
			65				75				85				95				105				115			
			Entering Indoor Wet Bulb Temperature																							
IDB	Airflow	ID WB	59	63	67	71	59	63	67	71	59	63	67	71	59	63	67	71	59	63	67	71	59	63	67	71
70	3550	MBh	118.5	120.2	123.7	-	117.5	119.1	122.6	-	114.4	116.1	119.6	-	109.2	110.8	114.3	-	102.8	104.4	107.9	-	96.9	98.5	102.0	-
		S/T	0.63	0.56	0.43	-	0.63	0.56	0.43	-	0.66	0.59	0.46	-	0.68	0.60	0.48	-	1.00	0.63	0.50	-	1.00	0.67	0.55	-
		ΔT	18.95	17.09	13.63	-	18.90	17.04	13.58	-	19.16	17.30	13.84	-	18.88	17.02	13.56	-	18.63	16.78	13.31	-	19.79	17.94	14.47	-
		kW	6.80	6.79	6.78	-	7.62	7.61	7.60	-	8.53	8.53	8.51	-	9.52	9.52	9.50	-	10.63	10.62	10.61	-	11.92	11.92	11.90	-
		Amps	26.72	26.69	26.63	-	30.47	30.44	30.38	-	34.65	34.62	34.56	-	39.17	39.14	39.08	-	44.23	44.20	44.13	-	50.16	50.13	50.06	-
		Hi PR	259	260	261	-	299	300	302	-	341	343	344	-	387	388	390	-	436	437	439	-	489	490	492	-
		Lo PR	123	124	127	-	130	132	135	-	137	138	141	-	142	144	147	-	147	149	152	-	154	156	159	-
	4000	MBh	120.4	122.1	125.6	-	119.4	121.0	124.5	-	116.3	118.0	121.5	-	111.1	112.7	116.2	-	104.6	106.3	109.8	-	98.8	100.4	103.9	-
		S/T	0.66	0.59	0.46	-	0.67	0.60	0.47	-	0.69	0.62	0.49	-	1.00	0.64	0.51	-	1.00	0.66	0.53	-	1.00	0.71	0.58	-
		ΔT	17.99	16.14	12.67	-	17.94	16.09	12.62	-	18.20	16.35	12.88	-	17.92	16.07	12.60	-	17.67	15.82	12.35	-	18.84	16.98	13.52	-
		kW	6.84	6.83	6.82	-	7.66	7.65	7.64	-	8.57	8.56	8.55	-	9.56	9.55	9.54	-	10.66	10.66	10.64	-	11.96	11.95	11.94	-
		Amps	26.89	26.86	26.80	-	30.63	30.60	30.54	-	34.81	34.78	34.72	-	39.34	39.31	39.24	-	44.39	44.36	44.30	-	50.32	50.29	50.23	-
		Hi PR	261	262	264	-	301	302	304	-	344	345	346	-	389	390	392	-	438	439	441	-	491	492	494	-
		Lo PR	125	126	129	-	132	134	137	-	139	140	143	-	144	146	149	-	149	151	154	-	156	158	161	-
	4500	MBh	122.9	124.6	128.1	-	121.9	123.6	127.0	-	118.8	120.5	124.0	-	113.6	115.2	118.7	-	107.2	108.8	112.3	-	101.3	103.0	106.4	-
		S/T	0.67	0.60	0.47	-	0.68	0.61	0.48	-	0.70	0.63	0.50	-	1.00	0.65	0.52	-	1.00	0.67	0.54	-	1.00	0.72	0.59	-
		ΔT	17.06	15.20	11.73	-	17.00	15.15	11.68	-	17.27	15.41	11.94	-	16.99	15.13	11.66	-	16.74	14.88	11.42	-	17.90	16.04	12.58	-
		kW	6.87	6.87	6.85	-	7.69	7.68	7.67	-	8.60	8.60	8.58	-	9.59	9.59	9.57	-	10.70	10.69	10.68	-	11.99	11.99	11.97	-
		Amps	27.05	27.02	26.96	-	30.79	30.76	30.70	-	34.97	34.95	34.88	-	39.50	39.47	39.40	-	44.55	44.52	44.46	-	50.48	50.45	50.39	-
		Hi PR	263	264	266	-	304	305	307	-	346	347	349	-	392	393	395	-	441	442	444	-	493	494	496	-
		Lo PR	127	129	132	-	135	136	139	-	141	143	146	-	147	148	151	-	152	153	157	-	159	160	163	-
75	3550	MBh	118.6	120.3	123.8	129.1	117.6	119.2	122.7	128.0	114.5	116.2	119.6	125.0	109.2	110.9	114.4	119.7	102.8	104.5	108.0	113.3	97.0	98.6	102.1	107.4
		S/T	0.75	0.68	0.55	0.4	0.76	0.68	0.56	0.4	1.00	0.71	0.58	0.4	1.00	0.73	0.60	0.5	1.00	0.75	0.62	0.5	1.00	1.00	0.67	0.5
		ΔT	23.03	21.17	17.71	14.1	22.98	21.12	17.66	14.1	23.24	21.38	17.92	14.3	22.96	21.10	17.64	14.0	22.71	20.86	17.39	13.8	23.87	22.02	18.55	15.0
		kW	6.80	6.79	6.78	6.8	7.61	7.61	7.59	7.7	8.53	8.52	8.51	8.6	9.52	9.51	9.50	9.6	10.62	10.61	10.60	10.7	11.92	11.91	11.90	12.0
		Amps	26.70	26.67	26.61	26.9	30.44	30.41	30.35	30.6	34.62	34.60	34.53	34.8	39.15	39.12	39.05	39.3	44.20	44.17	44.11	44.4	50.13	50.10	50.04	50.3
		Hi PR	259	260	262	266.2	299	300	302	306.6	342	343	345	349.0	387	388	390	394.6	436	438	439	443.8	489	490	492	496.4
		Lo PR	123	124	127	132.5	130	132	135	139.9	137	138	141	146.4	142	144	147	151.8	147	149	152	157.2	154	156	159	163.9
	4000	MBh	120.5	122.1	125.6	131.0	119.4	121.1	124.6	129.9	116.4	118.0	121.5	126.9	111.1	**112.8**	116.3	121.6	104.7	106.3	109.8	115.2	98.8	100.5	104.0	109.3
		S/T	0.78	0.71	0.58	0.4	0.79	0.72	0.59	0.5	1.00	0.74	0.61	0.5	1.00	**0.76**	0.63	0.5	1.00	0.78	0.65	0.5	1.00	1.00	0.70	0.6
		ΔT	22.07	20.22	16.75	13.2	22.02	20.17	16.70	13.1	22.28	20.43	16.96	13.4	22.00	**20.15**	16.68	13.1	21.76	19.90	16.43	12.8	22.92	21.06	17.60	14.0
		kW	6.83	6.83	6.81	6.9	7.65	7.64	7.63	7.7	8.56	8.56	8.54	8.6	9.55	**9.55**	9.53	9.6	10.66	10.65	10.64	10.7	11.95	11.95	11.93	12.0
		Amps	26.86	26.83	26.77	27.1	30.61	30.58	30.52	30.8	34.79	34.76	34.70	35.0	39.31	**39.28**	39.22	39.5	44.37	44.34	44.27	44.6	50.30	50.27	50.20	50.5
		Hi PR	261	262	264	268.3	301	302	304	308.8	344	345	347	351.1	389	**391**	392	396.8	439	440	442	446.0	491	492	494	498.5
		Lo PR	125	126	129	134.5	132	134	137	141.9	139	140	143	148.4	144	**146**	149	153.8	149	151	154	159.2	156	158	161	165.9
	4500	MBh	123.0	124.7	128.2	133.5	122.0	123.6	127.1	132.5	118.9	120.6	124.1	129.4	113.7	115.3	118.8	124.1	107.2	108.9	112.4	117.7	101.4	103.0	106.5	111.9
		S/T	0.79	0.72	0.59	0.5	1.00	0.73	0.60	0.5	1.00	0.75	0.62	0.5	1.00	0.77	0.64	0.5	1.00	0.79	0.66	0.5	1.00	1.00	0.71	0.6
		ΔT	21.14	19.28	15.81	12.2	21.09	19.23	15.76	12.2	21.35	19.49	16.03	12.4	21.07	19.21	15.75	12.2	20.82	18.96	15.50	11.9	21.98	20.12	16.66	13.1
		kW	6.87	6.86	6.85	6.9	7.69	7.68	7.67	7.7	8.60	8.59	8.58	8.6	9.59	9.58	9.57	9.6	10.69	10.69	10.67	10.7	11.99	11.98	11.97	12.0
		Amps	27.03	27.00	26.93	27.2	30.77	30.74	30.68	31.0	34.95	34.92	34.86	35.1	39.47	39.44	39.38	39.7	44.53	44.50	44.43	44.7	50.46	50.43	50.36	50.7
		Hi PR	263	264	266	270.8	304	305	307	311.2	346	347	349	353.6	392	393	395	399.2	441	442	444	448.4	494	495	496	501.0
		Lo PR	127	129	132	137.1	135	136	139	144.5	141	143	146	150.9	147	148	151	156.4	152	153	157	161.7	159	160	163	168.4

IDB: Entering Indoor Dry Bulb Temperature

Shaded area reflects ACCA (TVA) conditions

kW = Total system power

High and low pressures are measured at the liquid and suction access fittings.

Amps: Unit amps (comp.+ evaporator + condenser fan motors)

Design Subcooling, 16 - 19 °F @ the liquid access fitting connection ARI 95 test conditions. Design Superheat 8 - 12°F @ the compressor suction access fitting connection.

Expanded Cooling Data

DRG120 (cont.)

			Outdoor Ambient Temperature																							
			65				75				85				95				105				115			
			Entering Indoor Wet Bulb Temperature																							
IDB	Airflow	ID WB	59	63	67	71	59	63	67	71	59	63	67	71	59	63	67	71	59	63	67	71	59	63	67	71
80	3550	MBh	119.2	120.9	124.4	129.7	118.2	119.8	123.3	128.6	115.1	116.8	120.3	125.6	109.9	111.5	115.0	120.3	103.4	105.1	108.6	113.9	97.6	99.2	102.7	108.0
		S/T	1.00	0.80	0.67	0.5	1.00	0.80	0.68	0.5	1.00	0.83	0.70	0.6	1.00	0.85	0.72	0.6	1.00	1.00	0.74	0.6	1.00	1.00	0.79	0.7
		ΔT	27.14	25.28	21.82	18.2	27.09	25.23	21.77	18.2	27.35	25.49	22.03	18.4	27.07	25.21	21.75	18.2	26.82	24.96	21.50	17.9	27.98	26.13	22.66	19.1
		kW	6.80	6.79	6.78	6.8	7.62	7.61	7.60	7.7	8.53	8.53	8.51	8.6	9.52	9.51	9.50	9.6	10.62	10.62	10.60	10.7	11.92	11.91	11.90	12.0
		Amps	26.72	26.69	26.63	26.9	30.46	30.43	30.37	30.7	34.64	34.61	34.55	34.8	39.17	39.14	39.07	39.4	44.22	44.19	44.13	44.4	50.15	50.12	50.06	50.3
		Hi PR	259	260	262	266.6	300	301	303	307.1	342	343	345	349.5	388	389	391	395.1	437	438	440	444.3	489	491	492	496.8
		Lo PR	123	125	128	133.1	131	132	135	140.4	137	139	142	146.9	143	144	147	152.3	148	149	153	157.7	155	156	159	164.4
	4000	MBh	121.1	122.7	126.2	131.6	120.0	121.7	125.2	130.5	117.0	118.6	122.1	127.5	111.7	113.4	**116.9**	122.2	105.3	107.0	110.4	115.8	99.4	101.1	104.6	109.9
		S/T	1.00	0.83	0.70	0.6	1.00	0.84	0.71	0.6	1.00	0.86	0.73	0.6	1.00	1.00	**0.75**	0.6	1.00	1.00	0.77	0.6	1.00	1.00	0.82	0.7
		ΔT	26.18	24.33	20.86	17.3	26.13	24.28	20.81	17.2	26.39	24.54	21.07	17.5	26.11	24.26	**20.79**	17.2	25.86	24.01	20.54	17.0	27.03	25.17	21.70	18.1
		kW	6.84	6.83	6.82	6.9	7.65	7.65	7.63	7.7	8.57	8.56	8.55	8.6	9.56	9.55	**9.54**	9.6	10.66	10.65	10.64	10.7	11.96	11.95	11.94	12.0
		Amps	26.88	26.85	26.79	27.1	30.63	30.60	30.54	30.8	34.81	34.78	34.72	35.0	39.33	39.30	**39.24**	39.5	44.39	44.36	44.29	44.6	50.32	50.29	50.22	50.5
		Hi PR	261	263	264	268.8	302	303	305	309.2	344	345	347	351.6	390	391	**393**	397.3	439	440	442	446.5	492	493	495	499.0
		Lo PR	125	127	130	135.1	133	134	137	142.4	139	141	144	148.9	145	146	**149**	154.3	150	151	155	159.7	157	158	161	166.4
	4500	MBh	123.6	125.3	128.8	134.1	122.6	124.2	127.7	133.1	119.5	121.2	124.7	130.0	114.3	115.9	119.4	124.7	107.8	109.5	113.0	118.3	102.0	103.6	107.1	112.5
		S/T	1.00	0.84	0.71	0.6	1.00	0.85	0.72	0.6	1.00	0.87	0.74	0.6	1.00	1.00	0.76	0.6	1.00	1.00	0.78	0.6	1.00	1.00	0.83	0.7
		ΔT	25.25	23.39	19.92	16.3	25.19	23.34	19.87	16.3	25.46	23.60	20.13	16.5	25.18	23.32	19.85	16.3	24.93	23.07	19.61	16.0	26.09	24.23	20.77	17.2
		kW	6.87	6.87	6.85	6.9	7.69	7.68	7.67	7.7	8.60	8.60	8.58	8.6	9.59	9.59	9.57	9.6	10.70	10.69	10.68	10.7	11.99	11.99	11.97	12.0
		Amps	27.04	27.02	26.95	27.2	30.79	30.76	30.70	31.0	34.97	34.94	34.88	35.2	39.49	39.46	39.40	39.7	44.55	44.52	44.45	44.7	50.48	50.45	50.38	50.7
		Hi PR	264	265	267	271.2	304	305	307	311.7	347	348	350	354.1	392	393	395	399.7	442	443	444	448.9	494	495	497	501.4
		Lo PR	128	129	132	137.6	135	137	140	145.0	142	143	146	151.4	147	149	152	156.9	153	154	157	162.2	159	161	164	168.9
85	3550	MBh	121.2	122.8	126.3	131.7	120.1	121.8	125.3	130.6	117.1	118.7	122.2	127.6	111.8	113.5	117.0	122.3	105.4	107.1	110.5	115.9	99.5	101.2	104.7	110.0
		S/T	1.00	0.89	0.76	0.6	1.00	0.90	0.77	0.6	1.00	1.00	0.79	0.7	1.00	1.00	0.81	0.7	1.00	1.00	0.83	0.7	1.00	1.00	1.00	0.7
		ΔT	30.78	28.93	25.46	21.9	30.73	28.88	25.41	21.8	30.99	29.14	25.67	22.1	30.71	28.86	25.39	21.8	30.47	28.61	25.14	21.6	31.63	29.77	26.31	22.7
		kW	6.82	6.81	6.80	6.9	7.63	7.63	7.61	7.7	8.55	8.54	8.53	8.6	9.54	9.53	9.52	9.6	10.64	10.63	10.62	10.7	11.94	11.93	11.92	12.0
		Amps	26.79	26.76	26.70	27.0	30.54	30.51	30.44	30.7	34.72	34.69	34.62	34.9	39.24	39.21	39.15	39.4	44.29	44.26	44.20	44.5	50.22	50.19	50.13	50.4
		Hi PR	260	262	263	267.8	301	302	304	308.3	343	344	346	350.7	389	390	392	396.3	438	439	441	445.5	491	492	494	498.0
		Lo PR	125	127	130	134.9	133	134	137	142.3	139	140	144	148.7	144	146	149	154.2	150	151	154	159.5	156	158	161	166.2
	4000	MBh	123.1	124.7	128.2	133.5	122.0	123.7	127.2	132.5	119.0	120.6	124.1	129.4	113.7	115.4	118.8	124.2	107.3	108.9	112.4	117.8	101.4	103.1	106.6	111.9
		S/T	1.00	0.93	0.80	0.7	1.00	1.00	0.80	0.7	1.00	1.00	0.83	0.7	1.00	1.00	0.85	0.7	1.00	1.00	0.87	0.7	1.00	1.00	1.00	0.8
		ΔT	29.83	27.97	24.50	20.9	29.78	27.92	24.45	20.9	30.04	28.18	24.71	21.1	29.76	27.90	24.43	20.8	29.51	27.65	24.19	20.6	30.67	28.81	25.35	21.8
		kW	6.85	6.85	6.83	6.9	7.67	7.66	7.65	7.7	8.58	8.58	8.56	8.6	9.57	9.57	9.55	9.6	10.68	10.67	10.66	10.7	11.97	11.97	11.95	12.0
		Amps	26.96	26.93	26.86	27.1	30.70	30.67	30.61	30.9	34.88	34.85	34.79	35.1	39.40	39.38	39.31	39.6	44.46	44.43	44.37	44.7	50.39	50.36	50.30	50.6
		Hi PR	263	264	266	270.0	303	304	306	310.4	345	347	348	352.8	391	392	394	398.5	440	441	443	447.7	493	494	496	500.2
		Lo PR	127	129	132	136.9	135	136	139	144.3	141	142	146	150.7	146	148	151	156.2	152	153	156	161.5	158	160	163	168.2
	4500	MBh	125.6	127.2	130.7	136.1	124.5	126.2	129.7	135.0	121.5	123.1	126.6	132.0	116.2	117.9	121.4	126.7	109.8	111.5	115.0	120.3	103.9	105.6	109.1	114.4
		S/T	1.00	0.94	0.81	0.7	1.00	1.00	0.81	0.7	1.00	1.00	0.84	0.7	1.00	1.00	0.86	0.7	1.00	1.00	1.00	0.7	1.00	1.00	1.00	0.8
		ΔT	28.89	27.03	23.57	20.0	28.84	26.98	23.52	19.9	29.10	27.24	23.78	20.2	28.82	26.96	23.50	19.9	28.57	26.72	23.25	19.7	29.73	27.88	24.41	20.8
		kW	6.89	6.88	6.87	6.9	7.71	7.70	7.69	7.7	8.62	8.61	8.60	8.7	9.61	9.60	9.59	9.6	10.71	10.71	10.69	10.8	12.01	12.00	11.99	12.0
		Amps	27.12	27.09	27.02	27.3	30.86	30.83	30.77	31.1	35.04	35.01	34.95	35.2	39.57	39.54	39.47	39.8	44.62	44.59	44.53	44.8	50.55	50.52	50.46	50.7
		Hi PR	265	266	268	272.4	306	307	308	312.9	348	349	351	355.3	394	395	396	400.9	443	444	446	450.1	495	496	498	502.6
		Lo PR	130	131	134	139.4	137	139	142	146.8	144	145	148	153.3	149	150	154	158.7	154	156	159	164.1	161	163	166	170.8

IDB: Entering Indoor Dry Bulb Temperature

Shaded area reflects ACCA (TVA) conditions

kW = Total system power

High and low pressures are measured at the liquid and suction access fittings.

Amps: Unit amps (comp.+ evaporator + condenser fan motors)

Design Subcooling, 16 - 19 °F @ the liquid access fitting connection ARI 95 test conditions. Design Superheat 8 - 12°F @ the compressor suction access fitting connection.

			Outdoor Ambient Temperature																							
			65				75				85				95				105				115			
			Entering Indoor Wet Bulb Temperature																							
IDB	Airflow	ID WB	59	63	67	71	59	63	67	71	59	63	67	71	59	63	67	71	59	63	67	71	59	63	67	71
70	3800	MBh	141.2	143.2	147.3	-	140.0	141.9	146.1	-	136.3	138.3	142.5	-	130.1	132.0	136.2	-	122.4	124.4	128.5	-	115.4	117.4	121.6	-
		S/T	0.62	0.55	0.42	-	0.63	0.56	0.43	-	0.65	0.58	0.45	-	0.67	0.60	0.47	-	1.00	0.62	0.49	-	1.00	0.67	0.54	-
		ΔT	20.55	18.54	14.78	-	20.50	18.48	14.72	-	20.78	18.77	15.01	-	20.47	18.46	14.70	-	20.21	18.19	14.43	-	21.47	19.45	15.69	-
		kW	8.31	8.30	8.28	-	9.37	9.36	9.34	-	10.55	10.54	10.53	-	11.83	11.82	11.81	-	13.26	13.25	13.24	-	14.94	14.93	14.91	-
		Amps	33.00	32.96	32.87	-	37.85	37.81	37.72	-	43.26	43.22	43.14	-	49.12	49.08	48.99	-	55.66	55.62	55.54	-	63.34	63.30	63.22	-
		Hi PR	261	262	263	-	301	302	304	-	344	345	347	-	390	391	393	-	440	441	443	-	493	494	495	-
		Lo PR	119	121	124	-	127	128	131	-	133	134	137	-	138	140	143	-	143	145	148	-	150	151	154	-
	5000	MBh	147.6	149.6	153.8	-	146.4	148.4	152.5	-	142.8	144.7	148.9	-	136.5	138.5	142.6	-	128.8	130.8	135.0	-	121.9	123.8	128.0	-
		S/T	0.66	0.59	0.46	-	0.67	0.60	0.47	-	0.69	0.62	0.49	-	1.00	0.64	0.51	-	1.00	0.66	0.53	-	1.00	0.71	0.58	-
		ΔT	18.17	16.16	12.40	-	18.12	16.10	12.34	-	18.40	16.38	12.63	-	18.09	16.08	12.32	-	17.83	15.81	12.05	-	19.09	17.07	13.31	-
		kW	8.42	8.41	8.39	-	9.48	9.47	9.45	-	10.66	10.65	10.63	-	11.94	11.93	11.91	-	13.37	13.36	13.34	-	15.05	15.04	15.02	-
		Amps	33.48	33.45	33.36	-	38.33	38.30	38.21	-	43.75	43.71	43.63	-	49.60	49.57	49.48	-	56.15	56.11	56.03	-	63.83	63.79	63.71	-
		Hi PR	266	267	269	-	307	308	310	-	350	351	352	-	396	397	398	-	445	446	448	-	498	499	501	-
		Lo PR	125	126	129	-	132	133	136	-	138	140	143	-	144	145	148	-	149	150	153	-	155	157	160	-
	5625	MBh	152.3	154.3	158.4	-	151.1	153.0	157.2	-	147.4	149.4	153.5	-	141.2	143.1	147.3	-	133.5	135.5	139.6	-	126.5	128.5	132.6	-
		S/T	0.63	0.56	0.44	-	0.64	0.57	0.44	-	0.66	0.59	0.46	-	1.00	0.61	0.48	-	1.00	0.63	0.50	-	1.00	0.68	0.55	-
		ΔT	17.09	15.08	11.32	-	17.04	15.02	11.27	-	17.32	15.31	11.55	-	17.02	15.00	11.24	-	16.75	14.73	10.98	-	18.01	15.99	12.24	-
		kW	8.47	8.46	8.44	-	9.52	9.52	9.50	-	10.71	10.70	10.68	-	11.99	11.98	11.96	-	13.42	13.41	13.39	-	15.10	15.09	15.07	-
		Amps	33.70	33.67	33.58	-	38.55	38.51	38.43	-	43.97	43.93	43.84	-	49.82	49.79	49.70	-	56.37	56.33	56.25	-	64.05	64.01	63.93	-
		Hi PR	269	270	272	-	310	311	313	-	353	354	356	-	399	400	402	-	448	449	451	-	501	502	504	-
		Lo PR	128	130	133	-	136	137	140	-	142	143	146	-	147	149	152	-	152	154	157	-	159	160	163	-
75	3800	MBh	141.3	143.3	147.4	153.8	140.0	142.0	146.2	152.5	136.4	138.4	142.5	148.9	130.1	132.1	136.3	142.6	122.5	124.5	128.6	135.0	115.5	117.5	121.6	128.0
		S/T	0.74	0.67	0.54	0.4	0.75	0.68	0.55	0.4	0.77	0.70	0.57	0.4	1.00	0.72	0.59	0.5	1.00	0.74	0.61	0.5	1.00	0.79	0.66	0.5
		ΔT	24.98	22.96	19.20	15.3	24.92	22.91	19.15	15.3	25.20	23.19	19.43	15.5	24.90	22.89	19.13	15.2	24.63	22.62	18.86	15.0	25.89	23.88	20.12	16.2
		kW	8.30	8.30	8.28	8.4	9.36	9.35	9.34	9.4	10.55	10.54	10.52	10.6	11.83	11.82	11.80	11.9	13.26	13.25	13.23	13.3	14.93	14.93	14.91	15.0
		Amps	32.96	32.93	32.84	33.2	37.81	37.78	37.69	38.1	43.23	43.19	43.11	43.5	49.08	49.05	48.96	49.3	55.63	55.59	55.51	55.9	63.31	63.27	63.19	63.6
		Hi PR	261	262	264	268.2	302	303	304	309.0	344	345	347	351.7	390	391	393	397.7	440	441	443	447.3	493	494	496	500.2
		Lo PR	119	121	124	128.9	127	128	131	136.0	133	134	137	142.3	138	140	143	147.6	143	145	148	152.8	150	151	154	159.3
	5000	MBh	147.7	149.7	153.9	160.2	146.5	148.4	152.6	159.0	142.8	144.8	149.0	155.3	136.6	**138.5**	142.7	149.1	128.9	130.9	135.1	141.4	121.9	123.9	128.1	134.4
		S/T	0.78	0.71	0.58	0.5	0.79	0.72	0.59	0.5	1.00	0.74	0.61	0.5	1.00	**0.76**	0.63	0.5	1.00	0.78	0.65	0.5	1.00	1.00	0.70	0.6
		ΔT	22.60	20.58	16.82	12.9	22.54	20.53	16.77	12.9	22.82	20.81	17.05	13.2	22.52	**20.51**	16.75	12.9	22.25	20.24	16.48	12.6	23.51	21.50	17.74	13.8
		kW	8.41	8.40	8.38	8.5	9.47	9.46	9.44	9.5	10.65	10.64	10.63	10.7	11.93	**11.92**	11.91	12.0	13.36	13.35	13.34	13.4	15.04	15.03	15.01	15.1
		Amps	33.45	33.42	33.33	33.7	38.30	38.26	38.18	38.6	43.72	43.68	43.59	44.0	49.57	**49.53**	49.45	49.8	56.12	56.08	56.00	56.4	63.80	63.76	63.67	64.0
		Hi PR	266	267	269	273.7	307	308	310	314.5	350	351	353	357.2	396	**397**	399	403.2	445	446	448	452.8	498	499	501	505.7
		Lo PR	125	126	129	134.3	132	133	136	141.4	138	140	143	147.7	144	**145**	148	153.0	149	150	153	158.2	155	157	160	164.7
	5625	MBh	152.4	154.3	158.5	164.9	151.1	153.1	157.3	163.6	147.5	149.5	153.6	160.0	141.2	143.2	147.4	153.7	133.6	135.5	139.7	146.1	126.6	128.6	132.7	139.1
		S/T	0.75	0.68	0.56	0.4	1.00	0.69	0.56	0.4	1.00	0.71	0.59	0.5	1.00	0.73	0.60	0.5	1.00	0.75	0.62	0.5	1.00	1.00	0.67	0.5
		ΔT	21.52	19.50	15.75	11.9	21.46	19.45	15.69	11.8	21.75	19.73	15.97	12.1	21.44	19.43	15.67	11.8	21.17	19.16	15.40	11.5	22.43	20.42	16.66	12.8
		kW	8.46	8.45	8.43	8.5	9.52	9.51	9.49	9.6	10.70	10.69	10.67	10.8	11.98	11.97	11.95	12.0	13.41	13.40	13.38	13.5	15.09	15.08	15.06	15.1
		Amps	33.67	33.63	33.55	33.9	38.52	38.48	38.40	38.8	43.93	43.90	43.81	44.2	49.79	49.75	49.67	50.0	56.34	56.30	56.22	56.6	64.02	63.98	63.89	64.3
		Hi PR	270	271	272	277.0	310	311	313	317.8	353	354	356	360.5	399	400	402	406.5	449	450	452	456.0	502	503	504	509.0
		Lo PR	128	130	133	137.9	136	137	140	145.1	142	143	146	151.3	147	149	152	156.6	152	154	157	161.8	159	160	163	168.4

IDB: Entering Indoor Dry Bulb Temperature

Shaded area reflects ACCA (TVA) conditions

kW = Total system power

High and low pressures are measured at the liquid and suction access fittings.

Amps: Unit amps (comp.+ evaporator + condenser fan motors)

Design Subcooling, 16 - 19 °F @ the liquid access fitting connection ARI 95 test conditions. Design Superheat 8 - 12°F @ the compressor suction access fitting connection.

			Outdoor Ambient Temperature																							
			65				75				85				95				105				115			
			Entering Indoor Wet Bulb Temperature																							
IDB	Airflow	ID WB	59	63	67	71	59	63	67	71	59	63	67	71	59	63	67	71	59	63	67	71	59	63	67	71
80	3800	MBh	142.0	144.0	148.1	154.5	140.8	142.7	146.9	153.3	137.1	139.1	143.3	149.6	130.9	132.8	137.0	143.4	123.2	125.2	129.3	135.7	116.2	118.2	122.4	128.7
		S/T	0.86	0.79	0.66	0.5	1.00	0.79	0.67	0.5	1.00	0.82	0.69	0.6	1.00	0.84	0.71	0.6	1.00	1.00	0.73	0.6	1.00	1.00	0.78	0.6
		ΔT	29.43	27.42	23.66	19.8	29.38	27.36	23.61	19.7	29.66	27.65	23.89	20.0	29.36	27.34	23.59	19.7	29.09	27.08	23.32	19.4	30.35	28.34	24.58	20.7
		kW	8.31	8.30	8.28	8.4	9.37	9.36	9.34	9.4	10.55	10.54	10.53	10.6	11.83	11.82	11.81	11.9	13.26	13.25	13.24	13.3	14.94	14.93	14.91	15.0
		Amps	32.99	32.95	32.87	33.2	37.84	37.80	37.72	38.1	43.25	43.21	43.13	43.5	49.11	49.07	48.99	49.4	55.65	55.62	55.53	55.9	63.33	63.29	63.21	63.6
		Hi PR	261	262	264	268.7	302	303	305	309.5	345	346	348	352.2	391	392	394	398.2	440	441	443	447.8	493	494	496	500.7
		Lo PR	120	121	124	129.4	127	129	132	136.6	133	135	138	142.8	139	140	143	148.1	144	145	148	153.3	150	152	155	159.9
	5000	MBh	148.4	150.4	154.6	160.9	147.2	149.2	153.3	159.7	143.6	145.5	149.7	156.1	137.3	139.3	**143.4**	149.8	129.6	131.6	135.8	142.1	122.7	124.6	128.8	135.2
		S/T	1.00	0.83	0.70	0.6	1.00	0.83	0.71	0.6	1.00	0.86	0.73	0.6	1.00	1.00	**0.75**	0.6	1.00	1.00	0.77	0.6	1.00	1.00	0.82	0.7
		ΔT	27.05	25.04	21.28	17.4	27.00	24.98	21.23	17.3	27.28	25.27	21.51	17.6	26.98	24.96	**21.20**	17.3	26.71	24.69	20.94	17.0	27.97	25.95	22.20	18.3
		kW	8.42	8.41	8.39	8.5	9.48	9.47	9.45	9.5	10.66	10.65	10.63	10.7	11.94	11.93	**11.91**	12.0	13.37	13.36	13.34	13.4	15.05	15.04	15.02	15.1
		Amps	33.48	33.44	33.36	33.7	38.33	38.29	38.21	38.6	43.74	43.70	43.62	44.0	49.60	49.56	**49.48**	49.8	56.14	56.10	56.02	56.4	63.82	63.78	63.70	64.1
		Hi PR	267	268	270	274.2	308	309	310	315.0	350	351	353	357.7	396	397	**399**	403.7	446	447	449	453.3	499	500	502	506.2
		Lo PR	125	127	130	134.8	132	134	137	141.9	139	140	143	148.2	144	146	**149**	153.5	149	151	154	158.7	156	157	160	165.2
	5625	MBh	153.1	155.1	159.2	165.6	151.9	153.8	158.0	164.3	148.2	150.2	154.3	160.7	142.0	143.9	148.1	154.4	134.3	136.3	140.4	146.8	127.3	129.3	133.4	139.8
		S/T	1.00	0.80	0.67	0.5	1.00	0.81	0.68	0.5	1.00	0.83	0.70	0.6	1.00	1.00	0.72	0.6	1.00	1.00	0.74	0.6	1.00	1.00	0.79	0.7
		ΔT	25.97	23.96	20.20	16.3	25.92	23.91	20.15	16.3	26.20	24.19	20.43	16.5	25.90	23.89	20.13	16.2	25.63	23.62	19.86	16.0	26.89	24.88	21.12	17.2
		kW	8.46	8.46	8.44	8.5	9.52	9.52	9.50	9.6	10.71	10.70	10.68	10.8	11.99	11.98	11.96	12.0	13.42	13.41	13.39	13.5	15.09	15.09	15.07	15.1
		Amps	33.70	33.66	33.58	33.9	38.55	38.51	38.43	38.8	43.96	43.92	43.84	44.2	49.82	49.78	49.70	50.1	56.36	56.32	56.24	56.6	64.04	64.00	63.92	64.3
		Hi PR	270	271	273	277.5	311	312	314	318.2	353	355	356	360.9	399	401	402	406.9	449	450	452	456.5	502	503	505	509.4
		Lo PR	129	130	133	138.4	136	138	141	145.6	142	144	147	151.9	148	149	152	157.2	153	154	157	162.4	159	161	164	168.9
85	3800	MBh	144.4	146.3	150.5	156.9	143.1	145.1	149.2	155.6	139.5	141.4	145.6	152.0	133.2	135.2	139.3	145.7	125.6	127.5	131.7	138.1	118.6	120.5	124.7	131.1
		S/T	1.00	0.88	0.76	0.6	1.00	0.89	0.76	0.6	1.00	1.00	0.79	0.7	1.00	1.00	0.80	0.7	1.00	1.00	0.82	0.7	1.00	1.00	0.87	0.7
		ΔT	33.38	31.37	27.61	23.7	33.33	31.32	27.56	23.7	33.61	31.60	27.84	23.9	33.31	31.30	27.54	23.6	33.04	31.03	27.27	23.4	34.30	32.29	28.53	24.6
		kW	8.33	8.32	8.30	8.4	9.39	9.38	9.36	9.4	10.57	10.56	10.55	10.6	11.85	11.84	11.83	11.9	13.28	13.27	13.26	13.3	14.96	14.95	14.93	15.0
		Amps	33.08	33.04	32.96	33.3	37.93	37.89	37.81	38.2	43.34	43.31	43.22	43.6	49.20	49.16	49.08	49.5	55.75	55.71	55.63	56.0	63.43	63.39	63.30	63.7
		Hi PR	262	264	265	269.9	303	304	306	310.7	346	347	349	353.4	392	393	395	399.4	442	443	444	449.0	494	496	497	501.9
		Lo PR	122	123	126	131.2	129	130	133	138.3	135	137	140	144.6	140	142	145	149.9	146	147	150	155.1	152	154	157	161.6
	5000	MBh	150.8	152.8	156.9	163.3	149.5	151.5	155.7	162.0	145.9	147.9	152.0	158.4	139.6	141.6	145.8	152.1	132.0	134.0	138.1	144.5	125.0	127.0	131.1	137.5
		S/T	1.00	0.92	0.80	0.7	1.00	1.00	0.80	0.7	1.00	1.00	0.83	0.7	1.00	1.00	0.84	0.7	1.00	1.00	0.86	0.7	1.00	1.00	1.00	0.8
		ΔT	31.00	28.99	25.23	21.3	30.95	28.94	25.18	21.3	31.23	29.22	25.46	21.6	30.93	28.92	25.16	21.3	30.66	28.65	24.89	21.0	31.92	29.91	26.15	22.3
		kW	8.44	8.43	8.41	8.5	9.50	9.49	9.47	9.6	10.68	10.67	10.65	10.7	11.96	11.95	11.93	12.0	13.39	13.38	13.36	13.4	15.07	15.06	15.04	15.1
		Amps	33.57	33.53	33.45	33.8	38.42	38.38	38.30	38.7	43.83	43.80	43.71	44.1	49.69	49.65	49.57	49.9	56.24	56.20	56.11	56.5	63.91	63.88	63.79	64.2
		Hi PR	268	269	271	275.4	309	310	312	316.2	351	353	354	358.9	397	399	400	404.9	447	448	450	454.5	500	501	503	507.4
		Lo PR	127	129	132	136.5	134	136	139	143.7	141	142	145	150.0	146	147	150	155.3	151	152	155	160.5	158	159	162	167.0
	5625	MBh	155.5	157.4	161.6	167.9	154.2	156.2	160.3	166.7	150.6	152.5	156.7	163.1	144.3	146.3	150.4	156.8	136.6	138.6	142.8	149.1	129.7	131.6	135.8	142.2
		S/T	1.00	0.89	0.77	0.6	1.00	1.00	0.77	0.6	1.00	1.00	0.80	0.7	1.00	1.00	0.81	0.7	1.00	1.00	1.00	0.7	1.00	1.00	1.00	0.8
		ΔT	29.93	27.91	24.15	20.3	29.87	27.86	24.10	20.2	30.15	28.14	24.38	20.5	29.85	27.84	24.08	20.2	29.58	27.57	23.81	19.9	30.84	28.83	25.07	21.2
		kW	8.48	8.48	8.46	8.5	9.54	9.54	9.52	9.6	10.73	10.72	10.70	10.8	12.01	12.00	11.98	12.1	13.44	13.43	13.41	13.5	15.11	15.11	15.09	15.2
		Amps	33.79	33.75	33.67	34.0	38.64	38.60	38.52	38.9	44.05	44.01	43.93	44.3	49.91	49.87	49.79	50.2	56.46	56.42	56.33	56.7	64.13	64.10	64.01	64.4
		Hi PR	271	272	274	278.7	312	313	315	319.4	355	356	358	362.2	401	402	404	408.1	450	451	453	457.7	503	504	506	510.6
		Lo PR	131	132	135	140.2	138	139	142	147.4	144	146	149	153.6	149	151	154	158.9	155	156	159	164.1	161	163	166	170.6

IDB: Entering Indoor Dry Bulb Temperature

Shaded area reflects ACCA (TVA) conditions

kW = Total system power

High and low pressures are measured at the liquid and suction access fittings.

Amps: Unit amps (comp.+ evaporator + condenser fan motors)

Design Subcooling, 16 - 19 °F @ the liquid access fitting connection ARI 95 test conditions. Design Superheat 8 - 12°F @ the compressor suction access fitting connection.

Electric Heating Data

			Direct-Drive Kits																																			
	Model #	Min Airflow	EHXD-3M10	EHXD-3M15	EHXD-3M20	EHXD-3M30	EHXD-3M45	EHXD-3M60	EHSD-3M10	EHSD-3M15	EHSD-3M20	EHSD-3M30	EHSD-3M45	EHSD-3M60	EHXD-4M10	EHXD-4M15	EHXD-4M20	EHXD-4M30	EHXD-4M45	EHXD-4M60	EHSD-4M10	EHSD-4M15	EHSD-4M20	EHSD-4M30	EHSD-4M45	EHSD-4M60	EHXD-7M10	EHXD-7M15	EHXD-7M20	EHXD-7M30	EHXD-7M45	EHXD-7M60	EHSD-7M10	EHSD-7M15	EHSD-7M20	EHSD-7M30	EHSD-7M45	EHSD-7M60
HELC AC DIRECT DRIVE STANDARD STATIC	DRC0903D	2500	X	X	X	X	X		X	X	X	X	X																									
	DRC0904D	2500													X	X	X	X	X		X	X	X	X	X													
	DRC0907D	2500																									X	X	X	X	X		X	X	X	X	X	
	DRC1023D	2850	X	X	X	X	X		X	X	X	X	X																									
	DRC1024D	2850													X	X	X	X	X		X	X	X	X	X													
	DRC1027D	2850																									X	X	X	X	X		X	X	X	X	X	
	DRC1203D	3150	X	X	X	X	X	X	X	X	X	X	X	X																								
	DRC1204D	3150													X	X	X	X	X	X	X	X	X	X	X	X												
	DRC1207D	3150																									X	X	X	X	X	X	X	X	X	X	X	X
	DRC1503D	3750	X	X	X	X	X	X	X	X	X	X	X	X																								
	DRC1504D	3750													X	X	X	X	X	X	X	X	X	X	X	X												
	DRC1507D	3750																									X	X	X	X	X	X	X	X	X	X	X	X
HELC AC DIRECT DRIVE MEDIUM STATIC	DRC0903L	2500	X	X	X	X	X		X	X	X	X	X																									
	DRC0904L	2500													X	X	X	X	X		X	X	X	X	X													
	DRC0907L	2500																									X	X	X	X	X		X	X	X	X	X	
	DRC1023L	2850	X	X	X	X	X		X	X	X	X	X																									
	DRC1024L	2850													X	X	X	X	X		X	X	X	X	X													
	DRC1027L	2850																									X	X	X	X	X		X	X	X	X	X	
	DRC1203L	3150	X	X	X	X	X	X	X	X	X	X	X	X																								
	DRC1204L	3150													X	X	X	X	X	X	X	X	X	X	X	X												
	DRC1207L	3150																									X	X	X	X	X	X	X	X	X	X	X	X
	DRC1503L	3750	X	X	X	X	X	X	X	X	X	X	X	X																								
	DRC1504L	3750													X	X	X	X	X	X	X	X	X	X	X	X												
	DRC1507L	3750																									X	X	X	X	X	X	X	X	X	X	X	X
HELC AC DIRECT DRIVE HIGH STATIC	DRC0903W	2500	X	X	X	X	X		X	X	X	X	X																									
	DRC0904W	2500													X	X	X	X	X		X	X	X	X	X													
	DRC0907W	2500																									X	X	X	X	X		X	X	X	X	X	
	DRC1023W	2850	X	X	X	X	X		X	X	X	X	X																									
	DRC1024W	2850													X	X	X	X	X		X	X	X	X	X													
	DRC1027W	2850																									X	X	X	X	X		X	X	X	X	X	
	DRC1203W	3150	X	X	X	X	X	X	X	X	X	X	X	X																								
	DRC1204W	3150													X	X	X	X	X	X	X	X	X	X	X	X												
	DRC1207W	3150																									X	X	X	X	X	X	X	X	X	X	X	X
	DRC1503W	3750	X	X	X	X	X	X	X	X	X	X	X	X																								
	DRC1504W	3750													X	X	X	X	X	X	X	X	X	X	X	X												
	DRC1507W	3750																									X	X	X	X	X	X	X	X	X	X	X	X

7.5 Ton Cooler • Standard Static Direct Drive

Models: DRC0903D, DRC0904D, DRC0907D

Down Flow				
SPEED TAP	**ESP**	**CFM**	**RPM**	**BHP**
T1	0.2	2013	593	0.38
	0.4	1848	663	0.43
	0.6	1682	733	0.48
	0.8	1517	803	0.52
T2	0.2	2554	673	0.64
	0.4	2428	731	0.70
	0.6	2269	792	0.75
	0.8	2126	841	0.80
T3	0.2	3038	751	0.98
	0.4	2928	801	1.04
	0.6	2816	852	1.11
	0.8	2713	901	1.17
T4	0.2	3220	779	1.13
	0.4	3103	829	1.20
	0.6	3001	876	1.27
	0.8	2892	923	1.34
T5	0.2	3390	812	1.29
	0.4	3281	859	1.37
	0.6	3178	905	1.44
	0.8	3075	947	1.51
T6	0.2	3038	751	0.98
	0.4	2928	801	1.04
	0.6	2816	852	1.11
	0.8	2713	901	1.17
T7	0.2	3390	812	1.29
	0.4	3281	859	1.37
	0.6	3178	905	1.44
	0.8	3075	947	1.51
T8	0.2	3038	751	0.98
	0.4	2928	801	1.04
	0.6	2816	852	1.11
	0.8	2713	901	1.17
T9	0.2	3220	779	1.13
	0.4	3103	829	1.20
	0.6	3001	876	1.27
	0.8	2892	923	1.34
T10	0.2	3390	812	1.29
	0.4	3281	859	1.37
	0.6	3178	905	1.44
	0.8	3075	947	1.51

Horizontal Flow				
SPEED TAP	**ESP**	**CFM**	**RPM**	**BHP**
T1	0.2	1863	481	0.31
	0.4	1644	557	0.36
	0.6	-	-	-
	0.8	-	-	-
T2	0.2	2422	567	0.54
	0.4	2325	618	0.59
	0.6	2147	683	0.65
	0.8	1889	762	0.73
T3	0.2	2993	652	0.85
	0.4	2869	696	0.91
	0.6	2730	742	0.97
	0.8	2606	788	1.03
T4	0.2	3176	683	0.99
	0.4	3056	719	1.04
	0.6	2914	763	1.10
	0.8	2808	807	1.17
T5	0.2	3350	713	1.15
	0.4	3248	749	1.20
	0.6	3116	789	1.27
	0.8	3027	831	1.34
T6	0.2	2993	652	0.85
	0.4	2869	696	0.91
	0.6	2730	742	0.97
	0.8	2606	788	1.03
T7	0.2	3350	713	1.15
	0.4	3248	749	1.20
	0.6	3116	789	1.27
	0.8	3027	831	1.34
T8	0.2	2097	519	0.40
	0.4	2869	696	0.91
	0.6	2730	742	0.97
	0.8	2606	788	1.03
T9	0.2	3176	683	0.99
	0.4	3056	719	1.04
	0.6	2914	763	1.10
	0.8	2808	807	1.17
T10	0.2	3350	713	1.15
	0.4	3248	749	1.20
	0.6	3116	789	1.27
	0.8	3027	831	1.34

7.5 Ton Cooler • Medium Static Direct Drive

Models: DRC0903L, DRC0904L, DRC0907L

Down Flow				
SPEED TAP	ESP	CFM	RPM	BHP
T1	0.20	2013	593	0.38
	0.40	1848	663	0.43
	0.60	1682	733	0.48
	0.80	1517	803	0.52
	1.00	-	-	-
	1.20	-	-	-
	1.40	-	-	-
T2	0.2	3123	768	1.05
	0.4	3011	818	1.12
	0.6	2902	864	1.18
	0.8	2798	912	1.25
	1.0	2681	961	1.32
	1.2	2501	1010	1.38
	1.4	2266	1076	1.47
T3	0.2	3038	751	0.98
	0.4	2928	801	1.04
	0.6	2816	852	1.11
	0.8	2713	901	1.17
	1.0	2591	951	1.24
	1.2	2369	1003	1.31
	1.4	-	-	-
T4	0.2	3538	847	1.47
	0.4	3436	884	1.54
	0.6	3325	930	1.62
	0.8	3243	971	1.69
	1.0	3154	1017	1.77
	1.2	3040	1056	1.84
	1.4	2918	1095	1.90
T5	0.2	3675	866	1.63
	0.4	3577	906	1.70
	0.6	3483	948	1.78
	0.8	3385	988	1.86
	1.0	3300	1028	1.93
	1.2	3208	1070	2.01
	1.4	3112	1109	2.09
T6	0.2	3390	812	1.29
	0.4	3281	859	1.37
	0.6	3178	905	1.44
	0.8	3075	947	1.51
	1.0	2968	994	1.59
	1.2	2861	1036	1.65
	1.4	-	-	-
T7	0.2	3675	866	1.63
	0.4	3577	906	1.70
	0.6	3483	948	1.78
	0.8	3385	988	1.86
	1.0	3300	1028	1.93
	1.2	3208	1070	2.01
	1.4	3112	1109	2.09
T8	0.2	3390	812	1.29
	0.4	3281	859	1.37
	0.6	3178	905	1.44
	0.8	3075	947	1.51
	1.0	2968	994	1.59
	1.2	2861	1036	1.65
	1.4	-	-	-
T9	0.2	3538	847	1.47
	0.4	3436	884	1.54
	0.6	3325	930	1.62
	0.8	3243	971	1.69
	1.0	3154	1017	1.77
	1.2	3040	1056	1.84
	1.4	2918	1095	1.90
T10	0.2	3675	866	1.63
	0.4	3577	906	1.70
	0.6	3483	948	1.78
	0.8	3385	988	1.86
	1.0	3300	1028	1.93
	1.2	3208	1070	2.01
	1.4	3112	1109	2.09

Horizontal Flow				
SPEED TAP	ESP	CFM	RPM	BHP
T1	0.20	1863	481	0.31
	0.40	1644	557	0.36
	0.60	-	-	-
	0.80	-	-	-
	1.00	-	-	-
	1.20	-	-	-
	1.40	-	-	-
T2	0.20	3067	653	0.89
	0.40	2912	696	0.95
	0.60	2711	750	1.03
	0.80	2564	791	1.08
	1.00	2396	837	1.15
	1.20	2132	905	1.24
	1.40	1872	971	1.33
T3	0.2	2950	667	0.87
	0.4	2869	696	0.91
	0.6	2730	742	0.97
	0.8	2606	788	1.03
	1.0	2456	841	1.10
	1.2	-	-	-
	1.4	-	-	-
T4	0.2	3559	653	1.28
	0.4	3410	781	1.36
	0.6	3292	818	1.42
	0.8	3217	849	1.48
	1.0	3084	892	1.55
	1.2	2966	931	1.62
	1.4	2845	971	1.69
T5	0.2	3676	775	1.48
	0.4	3529	819	1.56
	0.6	3451	847	1.61
	0.8	3359	880	1.68
	1.0	3227	919	1.75
	1.2	3129	954	1.82
	1.4	3001	993	1.89
T6	0.2	3350	713	1.15
	0.4	3248	749	1.20
	0.6	3116	789	1.27
	0.8	3027	831	1.34
	1.0	2888	874	1.40
	1.2	2742	923	1.48
	1.4	2611	974	1.57
T7	0.2	3676	775	1.48
	0.4	3529	819	1.56
	0.6	3451	847	1.61
	0.8	3359	880	1.68
	1.0	3227	919	1.75
	1.2	3129	954	1.82
	1.4	3001	993	1.89
T8	0.2	3350	713	1.15
	0.4	3248	749	1.20
	0.6	3116	789	1.27
	0.8	3027	831	1.34
	1.0	2888	874	1.40
	1.2	2742	923	1.48
	1.4	2611	974	1.57
T9	0.2	3559	653	1.28
	0.4	3410	781	1.36
	0.6	3292	818	1.42
	0.8	3217	849	1.48
	1.0	3084	892	1.55
	1.2	2966	931	1.62
	1.4	2845	971	1.69
T10	0.2	3676	775	1.48
	0.4	3529	819	1.56
	0.6	3451	847	1.61
	0.8	3359	880	1.68
	1.0	3227	919	1.75
	1.2	3129	954	1.82
	1.4	3001	993	1.89

7.5 Ton Cooler • High Static Direct Drive

Models: DRC0903W, DRC0904W, DRC0907W

Down Flow				
SPEED TAP	ESP	CFM	RPM	BHP
T1	0.2	2013	593	0.38
	0.4	1848	663	0.43
	0.6	1682	733	0.48
	0.8	1517	803	0.52
	1.0	-	-	-
	1.2	-	-	-
	1.4	-	-	-
	1.6	-	-	-
	1.8	-	-	-
	2.0	-	-	-
T2	0.2	3220	779	1.13
	0.4	3103	829	1.20
	0.6	3001	876	1.27
	0.8	2892	923	1.34
	1.0	2782	971	1.40
	1.2	2653	1018	1.47
	1.4	2417	1095	1.58
	1.6	2202	1154	1.67
	1.8	2080	1192	1.72
	2.0	1947	1224	1.77
T3	0.2	3038	751	0.98
	0.4	2928	801	1.04
	0.6	2816	852	1.11
	0.8	2713	901	1.17
	1.0	2591	951	1.24
	1.2	2369	1003	1.31
	1.4	-	-	-
	1.6	-	-	-
	1.8	-	-	-
	2.0	-	-	-
T4	0.2	-	-	-
	0.4	-	-	-
	0.6	3696	956	1.94
	0.8	3543	1008	2.05
	1.0	3454	1047	2.13
	1.2	3376	1089	2.21
	1.4	3284	1126	2.29
	1.6	3189	1161	2.36
	1.8	3054	1217	2.47
	2.0	2822	1285	2.61
T5	0.2	-	-	-
	0.4	-	-	-
	0.6	-	-	-
	0.8	3676	1026	2.23
	1.0	3592	1061	2.31
	1.2	3522	1095	2.38
	1.4	3441	1141	2.48
	1.6	3343	1178	2.56
	1.8	3234	1218	2.65
	2.0	3164	1246	2.71
T6	0.2	3586	881	1.66
	0.4	3577	906	1.70
	0.6	3483	948	1.78
	0.8	3385	988	1.86
	1.0	3300	1028	1.93
	1.2	3208	1070	2.01
	1.4	3112	1109	2.09
	1.6	2995	1150	2.16
	1.8	2874	1197	2.25
	2.0	2573	1279	2.41

Horizontal Flow				
SPEED TAP	ESP	CFM	RPM	BHP
T1	0.2	1863	481	0.31
	0.4	1644	557	0.36
	0.6	-	-	-
	0.8	-	-	-
	1.0	-	-	-
	1.2	-	-	-
	1.4	-	-	-
	1.6	-	-	-
	1.8	-	-	-
	2.0	-	-	-
T2	0.2	3152	684	0.99
	0.4	3056	719	1.04
	0.6	2899	768	1.11
	0.8	2808	807	1.17
	1.0	2647	851	1.23
	1.2	2476	910	1.32
	1.4	2182	987	1.43
	1.6	2014	1034	1.50
	1.8	1886	1068	1.54
	2.0	1764	1102	1.59
T3	0.2	2993	652	0.85
	0.4	2869	696	0.91
	0.6	2730	742	0.97
	0.8	2606	788	1.03
	1.0	2456	841	1.10
	1.2	2333	884	1.15
	1.4	-	-	-
	1.6	-	-	-
	1.8	-	-	-
	2.0	-	-	-
T4	0.2	-	-	-
	0.4	-	-	-
	0.6	3644	851	1.73
	0.8	3496	897	1.82
	1.0	3378	933	1.89
	1.2	3281	969	1.97
	1.4	3165	1004	2.04
	1.6	3029	1046	2.12
	1.8	2901	1088	2.21
	2.0	2719	1140	2.31
T5	0.2	-	-	-
	0.4	-	-	-
	0.6	-	-	-
	0.8	3629	927	2.02
	1.0	3533	958	2.09
	1.2	3448	988	2.15
	1.4	3342	1021	2.22
	1.6	3230	1057	2.30
	1.8	3114	1095	2.38
	2.0	2976	1142	2.49
T6	0.2	3586	764	1.47
	0.4	3529	819	1.56
	0.6	3451	847	1.61
	0.8	3359	880	1.68
	1.0	3227	919	1.75
	1.2	3129	954	1.82
	1.4	3001	993	1.89
	1.6	2840	1040	1.98
	1.8	2702	1085	2.07
	2.0	2471	1142	2.18

7.5 Ton Cooler • High Static Direct Drive

Models: DRG0903WL, DRG0904WL, DRG0907WL

Down Flow					Horizontal Flow				
Speed Tap	ESP	CFM	RPM	BHP	Speed Tap	ESP	CFM	RPM	BHP
T7	0.2	-	-	-	T7	0.2	-	-	-
	0.4	-	-	-		0.4	-	-	-
	0.6	-	-	-		0.6	-	-	-
	0.8	3676	1026	2.23		0.8	3629	927	2.02
	1.0	3592	1061	2.31		1.0	3533	958	2.09
	1.2	3522	1095	2.38		1.2	3448	988	2.15
	1.4	3441	1141	2.48		1.4	3342	1021	2.22
	1.6	3343	1178	2.56		1.6	3230	1057	2.30
	1.8	3234	1218	2.65		1.8	3114	1095	2.38
	2.0	3164	1246	2.71		2.0	2976	1142	2.49
T8	0.2	3586	881	1.66	T8	0.2	3586	764	1.47
	0.4	3577	906	1.70		0.4	3529	819	1.56
	0.6	3483	948	1.78		0.6	3451	847	1.61
	0.8	3385	988	1.86		0.8	3359	880	1.68
	1.0	3300	1028	1.93		1.0	3227	919	1.75
	1.2	3208	1070	2.01		1.2	3129	954	1.82
	1.4	3112	1109	2.09		1.4	3001	993	1.89
	1.6	2995	1150	2.16		1.6	2840	1040	1.98
	1.8	2874	1197	2.25		1.8	2702	1085	2.07
	2.0	2573	1279	2.41		2.0	2471	1142	2.18
T9	0.2	-	-	-	T9	0.2	-	-	-
	0.4	-	-	-		0.4	-	-	-
	0.6	3696	956	1.94		0.6	3644	851	1.73
	0.8	3543	1008	2.05		0.8	3496	897	1.82
	1.0	3454	1047	2.13		1.0	3378	933	1.89
	1.2	3376	1089	2.21		1.2	3281	969	1.97
	1.4	3284	1126	2.29		1.4	3165	1004	2.04
	1.6	3189	1161	2.36		1.6	3029	1046	2.12
	1.8	3054	1217	2.47		1.8	2901	1088	2.21
	2.0	2822	1285	2.61		2.0	2719	1140	2.31
T10	0.2	-	-	-	T10	0.2	-	-	-
	0.4	-	-	-		0.4	-	-	-
	0.6	-	-	-		0.6	-	-	-
	0.8	3676	1026	2.23		0.8	3629	927	2.02
	1.0	3592	1061	2.31		1.0	3533	958	2.09
	1.2	3522	1095	2.38		1.2	3448	988	2.15
	1.4	3441	1141	2.48		1.4	3342	1021	2.22
	1.6	3343	1178	2.56		1.6	3230	1057	2.30
	1.8	3234	1218	2.65		1.8	3114	1095	2.38
	2.0	3164	1246	2.71		2.0	2976	1142	2.49

8.5 Ton Cooler • Standard Static Direct Drive

Models: DRC1023D, DRC1024D, DRC1027D

Down Flow				
SPEED TAP	ESP	CFM	RPM	BHP
T1	0.2	2160	472	0.37
	0.4	1958	530	0.41
	0.6	-	-	-
	0.8	-	-	-
T2	0.2	2805	564	0.64
	0.4	2638	619	0.70
	0.6	2435	676	0.76
	0.8	2256	723	0.82
T3	0.2	3131	609	0.83
	0.4	2967	657	0.90
	0.6	2774	709	0.97
	0.8	2605	750	1.03
T4	0.2	3366	644	1.00
	0.4	3222	689	1.08
	0.6	3055	738	1.15
	0.8	2891	778	1.21
T5	0.2	3824	703	1.36
	0.4	3704	743	1.43
	0.6	3531	773	1.50
	0.8	3414	823	1.60
T6	0.2	3131	609	0.83
	0.4	2967	657	0.90
	0.6	2774	709	0.97
	0.8	-	-	-
T7	0.2	3824	703	1.36
	0.4	3704	743	1.43
	0.6	3531	773	1.50
	0.8	3414	823	1.60
T8	0.2	3131	609	0.83
	0.4	2967	657	0.90
	0.6	2774	709	0.97
	0.8	-	-	-
T9	0.2	3366	644	1.00
	0.4	3222	689	1.08
	0.6	3055	738	1.15
	0.8	2891	778	1.21
T10	0.2	3824	703	1.36
	0.4	3704	743	1.43
	0.6	3531	773	1.50
	0.8	3414	823	1.60

Horizontal Flow				
SPEED TAP	ESP	CFM	RPM	BHP
T1	0.2	2209	462	0.36
	0.4	2046	524	0.41
	0.6	-	-	-
	0.8	-	-	-
T2	0.2	2822	557	0.63
	0.4	2693	609	0.69
	0.6	2534	663	0.75
	0.8	2451	706	0.80
T3	0.2	3133	601	0.82
	0.4	3017	647	0.89
	0.6	2858	699	0.96
	0.8	2787	735	1.01
T4	0.2	3381	642	1.00
	0.4	3274	685	1.07
	0.6	3143	733	1.14
	0.8	3058	768	1.20
T5	0.2	3806	697	1.34
	0.4	3727	734	1.42
	0.6	3590	781	1.49
	0.8	3556	820	1.58
T6	0.2	3133	601	0.82
	0.4	3017	647	0.89
	0.6	2858	699	0.96
	0.8	2787	735	1.01
T7	0.2	3806	697	1.34
	0.4	3727	734	1.42
	0.6	3590	781	1.49
	0.8	3556	820	1.58
T8	0.2	3133	601	0.82
	0.4	3017	647	0.89
	0.6	2858	699	0.96
	0.8	2787	735	1.01
T9	0.2	3381	642	1.00
	0.4	3274	685	1.07
	0.6	3143	733	1.14
	0.8	3058	768	1.20
T10	0.2	3806	697	1.34
	0.4	3727	734	1.42
	0.6	3590	781	1.49
	0.8	3556	820	1.58

8.5 Ton Cooler • Medium Static Direct Drive

Models: DRC1023L, DRC1024L, DRC1027L

Down Flow				
SPEED TAP	ESP	CFM	RPM	BHP
T1	0.2	2160	472	0.37
	0.4	1958	530	0.41
	0.6	1703	601	0.46
	0.8	-	-	-
	1.0	-	-	-
	1.2	-	-	-
	1.4	-	-	-
T2	0.2	3366	644	1.00
	0.4	3222	689	1.08
	0.6	3055	738	1.15
	0.8	2891	778	1.21
	1.0	2680	829	1.29
	1.2	2478	872	1.36
	1.4	2274	908	1.42
T3	0.2	3131	609	0.83
	0.4	2967	657	0.90
	0.6	2774	709	0.97
	0.8	2605	750	1.03
	1.0	-	-	-
	1.2	-	-	-
	1.4	-	-	-
T4	0.2	3814	703	1.34
	0.4	3652	747	1.42
	0.6	3489	790	1.50
	0.8	3305	832	1.59
	1.0	3125	872	1.66
	1.2	2941	912	1.74
	1.4	-	-	-
T5	0.2	-	-	-
	0.4	4246	810	1.76
	0.6	4022	846	1.85
	0.8	3854	881	1.94
	1.0	3685	917	2.03
	1.2	3572	952	2.11
	1.4	3348	987	2.20
T6	0.2	3565	671	1.15
	0.4	3412	715	1.22
	0.6	3247	760	1.30
	0.8	3089	795	1.36
	1.0	2874	846	1.45
	1.2	-	-	-
	1.4	-	-	-
T7	0.2	-	-	-
	0.4	4246	810	1.76
	0.6	4022	846	1.85
	0.8	3854	881	1.94
	1.0	3685	917	2.03
	1.2	3572	952	2.11
	1.4	3348	987	2.20
T8	0.2	3565	671	1.15
	0.4	3412	715	1.22
	0.6	3247	760	1.30
	0.8	3089	795	1.36
	1.0	2874	846	1.45
	1.2	-	-	-
	1.4	-	-	-
T9	0.2	3814	703	1.34
	0.4	3652	747	1.42
	0.6	3489	790	1.50
	0.8	3305	832	1.59
	1.0	3125	872	1.66
	1.2	2941	912	1.74
	1.4	-	-	-
T10	0.2	-	-	-
	0.4	4246	810	1.76
	0.6	4022	846	1.85
	0.8	3854	881	1.94
	1.0	3685	917	2.03
	1.2	3572	952	2.11
	1.4	3348	987	2.20

Horizontal Flow				
SPEED TAP	ESP	CFM	RPM	BHP
T1	0.2	2209	462	0.36
	0.4	2046	524	0.41
	0.6	1841	600	0.46
	0.8	-	-	-
	1.0	-	-	-
	1.2	-	-	-
	1.4	-	-	-
T2	0.2	3381	642	1.00
	0.4	3274	685	1.07
	0.6	3143	733	1.14
	0.8	3058	768	1.20
	1.0	2900	821	1.28
	1.2	2784	860	1.34
	1.4	2672	895	1.40
T3	0.2	3133	601	0.82
	0.4	3017	647	0.89
	0.6	2858	699	0.96
	0.8	2787	735	1.01
	1.0	2630	787	1.08
	1.2	-	-	-
	1.4	-	-	-
T4	0.2	3804	692	1.32
	0.4	3698	735	1.40
	0.6	3595	776	1.48
	0.8	3480	817	1.56
	1.0	3364	856	1.63
	1.2	3260	893	1.70
	1.4	3151	931	1.77
T5	0.2	-	-	-
	0.4	4220	795	1.73
	0.6	4127	828	1.81
	0.8	4033	862	1.90
	1.0	3940	894	1.98
	1.2	3846	929	2.06
	1.4	3753	963	2.15
T6	0.2	3560	660	1.13
	0.4	3452	704	1.20
	0.6	3330	748	1.28
	0.8	3251	787	1.35
	1.0	3111	834	1.42
	1.2	3018	869	1.48
	1.4	2918	907	1.55
T7	0.2	-	-	-
	0.4	4220	795	1.73
	0.6	4127	828	1.81
	0.8	4033	862	1.90
	1.0	3940	894	1.98
	1.2	3846	929	2.06
	1.4	3753	963	2.15
T8	0.2	3560	660	1.13
	0.4	3452	704	1.20
	0.6	3330	748	1.28
	0.8	3251	787	1.35
	1.0	3111	834	1.42
	1.2	3018	869	1.48
	1.4	2918	907	1.55
T9	0.2	3804	692	1.32
	0.4	3698	735	1.40
	0.6	3595	776	1.48
	0.8	3480	817	1.56
	1.0	3364	856	1.63
	1.2	3260	893	1.70
	1.4	3151	931	1.77
T10	0.2	-	-	-
	0.4	4220	795	1.73
	0.6	4127	828	1.81
	0.8	4033	862	1.90
	1.0	3940	894	1.98
	1.2	3846	929	2.06
	1.4	3753	963	2.15

8.5 Ton Cooler • High Static Direct Drive

Models: DRC1023W, DRC1024W, DRC1027W

Down Flow				
SPEED TAP	ESP	CFM	RPM	BHP
T1	0.2	2160	472	0.37
	0.4	1958	530	0.41
	0.6	1703	601	0.46
	0.8	-	-	-
	1.0	-	-	-
	1.2	-	-	-
	1.4	-	-	-
	1.6	-	-	-
	1.8	-	-	-
	2.0	-	-	-
T2	0.2	3814	703	1.34
	0.4	3652	747	1.42
	0.6	3489	790	1.50
	0.8	3305	832	1.59
	1.0	3125	872	1.66
	1.2	2941	912	1.74
	1.4	2743	952	1.81
	1.6	2559	987	1.88
	1.8	2366	1021	1.94
	2.0	2212	1048	2.00
T3	0.2	3131	609	0.83
	0.4	2967	657	0.90
	0.6	2774	709	0.97
	0.8	2605	750	1.03
	1.0	-	-	-
	1.2	-	-	-
	1.4	-	-	-
	1.6	-	-	-
	1.8	-	-	-
	2.0	-	-	-
T4	0.2	-	-	-
	0.4	-	-	-
	0.6	4136	866	2.13
	0.8	3938	906	2.23
	1.0	3756	941	2.32
	1.2	3582	977	2.41
	1.4	3379	1011	2.49
	1.6	3208	1043	2.57
	1.8	3024	1081	2.66
	2.0	2816	1099	2.71
T5	0.2	-	-	-
	0.4	-	-	-
	0.6	-	-	-
	0.8	-	-	-
	1.0	4124	975	2.71
	1.2	3958	1008	2.81
	1.4	3757	1040	2.90
	1.6	3584	1071	2.98
	1.8	3395	1102	3.07
	2.0	3209	1130	3.15
T6	0.2	4123	746	1.62
	0.4	3966	787	1.71
	0.6	3807	827	1.79
	0.8	3628	867	1.88
	1.0	3460	905	1.96
	1.2	3275	942	2.0
	1.4	3085	980	2.12
	1.6	2908	1013	2.19
	1.8	-	-	-
	2.0	-	-	-

Horizontal Flow				
SPEED TAP	ESP	CFM	RPM	BHP
T1	0.2	2209	462	0.36
	0.4	2046	524	0.41
	0.6	1841	600	0.46
	0.8	-	-	-
	1.0	-	-	-
	1.2	-	-	-
	1.4	-	-	-
	1.6	-	-	-
	1.8	-	-	-
	2.0	-	-	-
T2	0.2	3804	692	1.32
	0.4	3698	735	1.40
	0.6	3595	776	1.48
	0.8	3480	817	1.56
	1.0	3364	856	1.63
	1.2	3260	893	1.70
	1.4	3151	931	1.77
	1.6	3040	962	1.83
	1.8	2932	993	1.89
	2.0	2815	1025	1.95
T3	0.2	3133	601	0.82
	0.4	3017	647	0.89
	0.6	2858	699	0.96
	0.8	2787	735	1.01
	1.0	2630	787	1.08
	1.2	-	-	-
	1.4	-	-	-
	1.6	-	-	-
	1.8	-	-	-
	2.0	-	-	-
T4	0.2	4246	843	2.08
	0.4	4137	873	2.15
	0.6	4028	904	2.23
	0.8	3952	929	2.29
	1.0	3867	956	2.36
	1.2	3787	982	2.42
	1.4	3712	1008	2.48
	1.6	3643	1034	2.55
	1.8	3603	1054	2.60
	2.0	3500	1087	2.68
T5	0.2	-	-	-
	0.4	-	-	-
	0.6	-	-	-
	0.8	-	-	-
	1.0	-	-	-
	1.2	4251	984	2.74
	1.4	4143	1018	2.84
	1.6	4050	1049	2.92
	1.8	3952	1081	3.01
	2.0	3847	1112	3.10
T6	0.2	4124	729	1.58
	0.4	4013	771	1.67
	0.6	3905	811	1.76
	0.8	3797	850	1.84
	1.0	3689	886	1.92
	1.2	3586	923	2.0
	1.4	3479	958	2.08
	1.6	3380	991	2.15
	1.8	3289	1023	2.22
	2.0	3174	1051	2.28

8.5 Ton Cooler • High Static Direct Drive

Models: DRC1023W, DRC1024W, DRC1027W

Down Flow				
Speed Tap	**ESP**	**CFM**	**RPM**	**BHP**
T7	0.2	-	-	-
	0.4	-	-	-
	0.6	-	-	-
	0.8	-	-	-
	1.0	4124	975	2.71
	1.2	3958	1008	2.81
	1.4	3757	1040	2.90
	1.6	3584	1071	2.98
	1.8	3395	1102	3.07
	2.0	3209	1130	3.15
T8	0.2	4123	746	1.62
	0.4	3966	787	1.71
	0.6	3807	827	1.79
	0.8	3628	867	1.88
	1.0	3460	905	1.96
	1.2	3275	942	2.0
	1.4	3085	980	2.12
	1.6	2908	1013	2.19
	1.8	-	-	-
	2.0	-	-	-
T9	0.2	-	-	-
	0.4	-	-	-
	0.6	4136	866	2.13
	0.8	3938	906	2.23
	1.0	3756	941	2.32
	1.2	3582	977	2.41
	1.4	3379	1011	2.49
	1.6	3208	1043	2.57
	1.8	3024	1081	2.66
	2.0	2816	1099	2.71
T10	0.2	-	-	-
	0.4	-	-	-
	0.6	-	-	-
	0.8	-	-	-
	1.0	4124	975	2.71
	1.2	3958	1008	2.81
	1.4	3757	1040	2.90
	1.6	3584	1071	2.98
	1.8	3395	1102	3.07
	2.0	3209	1130	3.15

Horizontal Flow				
Speed Tap	**ESP**	**CFM**	**RPM**	**BHP**
T7	0.2	-	-	-
	0.4	-	-	-
	0.6	-	-	-
	0.8	-	-	-
	1.0	-	-	-
	1.2	4251	984	2.74
	1.4	4143	1018	2.84
	1.6	4050	1049	2.92
	1.8	3952	1081	3.01
	2.0	3847	1112	3.10
T8	0.2	4124	729	1.58
	0.4	4013	771	1.67
	0.6	3905	811	1.76
	0.8	3797	850	1.84
	1.0	3689	886	1.92
	1.2	3586	923	2.0
	1.4	3479	958	2.08
	1.6	3380	991	2.15
	1.8	3289	1023	2.22
	2.0	3174	1051	2.28
T9	0.2	4246	843	2.08
	0.4	4137	873	2.15
	0.6	4028	904	2.23
	0.8	3952	929	2.29
	1.0	3867	956	2.36
	1.2	3787	982	2.42
	1.4	3712	1008	2.48
	1.6	3643	1034	2.55
	1.8	3603	1054	2.60
	2.0	3500	1087	2.68
T10	0.2	-	-	-
	0.4	-	-	-
	0.6	-	-	-
	0.8	-	-	-
	1.0	-	-	-
	1.2	4251	984	2.74
	1.4	4143	1018	2.84
	1.6	4050	1049	2.92
	1.8	3952	1081	3.01
	2.0	3847	1112	3.10

10.0 Ton Cooler • Standard Static Direct Drive

Models: DRC1203D, DRC1204D, DRC1207D

Down Flow				
SPEED TAP	ESP	CFM	RPM	BHP
T1	0.2	2217	420	0.32
	0.4	2010	507	0.38
	0.6	-	-	-
	0.8	-	-	-
T2	0.2	3329	554	0.76
	0.4	3207	606	0.83
	0.6	3013	672	0.92
	0.8	2748	751	1.03
T3	0.2	3702	596	0.97
	0.4	3587	644	1.05
	0.6	3402	702	1.14
	0.8	3280	751	1.23
T4	0.2	4280	662	1.39
	0.4	4143	709	1.49
	0.6	4005	756	1.58
	0.8	3886	802	1.68
T5	0.2	4485	685	1.56
	0.4	4357	732	1.66
	0.6	4225	778	1.77
	0.8	4113	822	1.87
T6	0.2	3702	596	0.97
	0.4	3587	644	1.05
	0.6	3402	702	1.14
	0.8	3280	751	1.23
T7	0.2	4485	685	1.56
	0.4	4357	732	1.66
	0.6	4225	778	1.77
	0.8	4113	822	1.87
T8	0.2	3702	596	0.97
	0.4	3587	644	1.05
	0.6	3402	702	1.14
	0.8	3280	751	1.23
T9	0.2	4280	662	1.39
	0.4	4143	709	1.49
	0.6	4005	756	1.58
	0.8	3886	802	1.68
T10	0.2	4485	685	1.56
	0.4	4357	732	1.66
	0.6	4225	778	1.77
	0.8	4113	822	1.87

Horizontal Flow				
SPEED TAP	ESP	CFM	RPM	BHP
T1	0.2	2246	427	0.32
	0.4	1986	518	0.39
	0.6	-	-	-
	0.8	-	-	-
T2	0.2	3318	567	0.78
	0.4	3173	626	0.86
	0.6	2965	693	0.95
	0.8	2694	768	1.05
T3	0.2	3704	604	0.99
	0.4	3577	658	1.07
	0.6	3388	720	1.17
	0.8	3250	770	1.26
T4	0.2	4220	681	1.43
	0.4	4093	728	1.53
	0.6	3982	770	1.61
	0.8	3824	826	1.73
T5	0.2	4436	705	1.60
	0.4	4307	751	1.71
	0.6	4196	790	1.80
	0.8	4040	847	1.93
T6	0.2	3704	604	0.99
	0.4	3577	658	1.07
	0.6	3388	720	1.17
	0.8	3250	770	1.26
T7	0.2	4436	705	1.60
	0.4	4307	751	1.71
	0.6	4196	790	1.80
	0.8	4040	847	1.93
T8	0.2	3704	604	0.99
	0.4	3577	658	1.07
	0.6	3388	720	1.17
	0.8	3250	770	1.26
T9	0.2	4220	681	1.43
	0.4	4093	728	1.53
	0.6	3982	770	1.61
	0.8	3824	826	1.73
T10	0.2	4436	705	1.60
	0.4	4307	751	1.71
	0.6	4196	790	1.80
	0.8	4040	847	1.93

10.0 Ton Cooler • Medium Static Direct Drive

Models: DRC1203L, DRC1204L, DRC1207L

Down Flow				
SPEED TAP	ESP	CFM	RPM	BHP
T1	0.2	2217	420	0.32
	0.4	2010	507	0.38
	0.6	-	-	-
	0.8	-	-	-
	1.0	-	-	-
	1.2	-	-	-
	1.4	-	-	-
T2	0.2	3833	610	1.05
	0.4	3731	656	1.13
	0.6	3554	714	1.23
	0.8	3434	763	1.32
	1.0	3271	818	1.41
	1.2	2968	894	1.54
	1.4	2655	971	1.68
T3	0.2	3702	596	0.97
	0.4	3587	644	1.05
	0.6	3402	702	1.14
	0.8	3280	751	1.23
	1.0	3122	806	1.31
	1.2	-	-	-
	1.4	-	-	-
T4	0.2	4595	699	1.66
	0.4	4470	744	1.77
	0.6	4341	789	1.88
	0.8	4234	833	1.98
	1.0	4123	875	2.08
	1.2	4002	918	2.18
	1.4	3882	961	2.29
T5	0.2	4794	723	1.85
	0.4	4672	767	1.96
	0.6	4545	810	2.07
	0.8	4443	852	2.18
	1.0	4332	891	2.28
	1.2	4215	933	2.39
	1.4	4100	975	2.50
T6	0.2	4485	685	1.56
	0.4	4357	732	1.66
	0.6	4225	778	1.77
	0.8	4113	822	1.87
	1.0	4004	866	2.0
	1.2	3878	910	2.07
	1.4	3760	952	2.16
T7	0.2	4794	723	1.85
	0.4	4672	767	1.96
	0.6	4545	810	2.07
	0.8	4443	852	2.18
	1.0	4332	891	2.28
	1.2	4215	933	2.39
	1.4	4100	975	2.50
T8	0.2	4485	685	1.56
	0.4	4357	732	1.66
	0.6	4225	778	1.77
	0.8	4113	822	1.87
	1.0	4004	866	2.0
	1.2	3878	910	2.07
	1.4	3760	952	2.16
T9	0.2	4595	699	1.66
	0.4	4470	744	1.77
	0.6	4341	789	1.88
	0.8	4234	833	1.98
	1.0	4123	875	2.08
	1.2	4002	918	2.18
	1.4	3882	961	2.29
T10	0.2	4794	723	1.85
	0.4	4672	767	1.96
	0.6	4545	810	2.07
	0.8	4443	852	2.18
	1.0	4332	891	2.28
	1.2	4215	933	2.39
	1.4	4100	975	2.50

Horizontal Flow				
SPEED TAP	ESP	CFM	RPM	BHP
T1	0.2	2246	427	0.32
	0.4	1986	518	0.39
	0.6	-	-	-
	0.8	-	-	-
	1.0	-	-	-
	1.2	-	-	-
	1.4	-	-	-
T2	0.2	3823	622	1.07
	0.4	3713	667	1.15
	0.6	3532	723	1.25
	0.8	3398	775	1.34
	1.0	3223	833	1.44
	1.2	2917	909	1.57
	1.4	2598	988	1.71
T3	0.2	3704	604	0.99
	0.4	3577	658	1.07
	0.6	3388	720	1.17
	0.8	3250	770	1.26
	1.0	3077	824	1.34
	1.2	-	-	-
	1.4	-	-	-
T4	0.2	4546	717	1.71
	0.4	4425	761	1.81
	0.6	4314	803	1.91
	0.8	4170	853	2.03
	1.0	4039	909	2.16
	1.2	3918	943	2.24
	1.4	3784	992	2.36
T5	0.2	4747	741	1.90
	0.4	4634	783	2.00
	0.6	4527	824	2.11
	0.8	4389	870	2.23
	1.0	4266	906	2.32
	1.2	4139	956	2.45
	1.4	3996	1010	2.59
T6	0.2	4436	705	1.60
	0.4	4307	751	1.71
	0.6	4196	790	1.80
	0.8	4040	847	1.93
	1.0	3887	903	2.05
	1.2	3782	940	2.1
	1.4	3664	982	2.2
T7	0.2	4747	741	1.90
	0.4	4634	783	2.00
	0.6	4527	824	2.11
	0.8	4389	870	2.23
	1.0	4266	906	2.32
	1.2	4139	956	2.45
	1.4	3996	1010	2.59
T8	0.2	4436	705	1.60
	0.4	4307	751	1.71
	0.6	4196	790	1.80
	0.8	4040	847	1.93
	1.0	3887	903	2.05
	1.2	3782	940	2.1
	1.4	3664	982	2.2
T9	0.2	4546	717	1.71
	0.4	4425	761	1.81
	0.6	4314	803	1.91
	0.8	4170	853	2.03
	1.0	4039	909	2.16
	1.2	3918	943	2.24
	1.4	3784	992	2.36
T10	0.2	4747	741	1.90
	0.4	4634	783	2.00
	0.6	4527	824	2.11
	0.8	4389	870	2.23
	1.0	4266	906	2.32
	1.2	4139	956	2.45
	1.4	3996	1010	2.59

10.0 Ton Cooler • High Static Direct Drive

Models: DRC1203W, DRC1204W, DRC1207W

Down Flow					Horizontal Flow				
SPEED TAP	ESP	CFM	RPM	BHP	SPEED TAP	ESP	CFM	RPM	BHP
T1	0.2	2217	420	0.32	T1	0.2	2246	427	0.32
	0.4	2010	507	0.38		0.4	1986	518	0.39
	0.6	-	-	-		0.6	-	-	-
	0.8	-	-	-		0.8	-	-	-
	1.0	-	-	-		1.0	-	-	-
	1.2	-	-	-		1.2	-	-	-
	1.4	-	-	-		1.4	-	-	-
	1.6	-	-	-		1.6	-	-	-
	1.8	-	-	-		1.8	-	-	-
	2.0	-	-	-		2.0	-	-	-
T2	0.2	4204	653	1.32	T2	0.2	4141	671	1.36
	0.4	4062	702	1.42		0.4	4026	717	1.45
	0.6	3926	748	1.51		0.6	3890	764	1.55
	0.8	3806	796	1.61		0.8	3745	820	1.66
	1.0	3694	842	1.70		1.0	3581	878	1.78
	1.2	3584	891	1.80		1.2	3438	936	1.89
	1.4	3484	938	1.90		1.4	3270	980	1.98
	1.6	3082	1022	2.07		1.6	2965	1051	2.13
	1.8	2824	1083	2.19		1.8	2752	1096	2.22
	2.0	2658	1111	2.25		2.0	2646	1123	2.27
T3	0.2	3702	596	0.97	T3	0.2	3704	604	0.99
	0.4	3587	644	1.05		0.4	3577	658	1.07
	0.6	3402	702	1.14		0.6	3388	720	1.17
	0.8	3280	751	1.23		0.8	3250	770	1.26
	1.0	3122	806	1.31		1.0	3077	824	1.34
	1.2	-	-	-		1.2	-	-	-
	1.4	-	-	-		1.4	-	-	-
	1.6	-	-	-		1.6	-	-	-
	1.8	-	-	-		1.8	-	-	-
	2.0	-	-	-		2.0	-	-	-
T4	0.2	4851	729	1.91	T4	0.2	4807	748	1.96
	0.4	4729	773	2.02		0.4	4688	791	2.07
	0.6	4600	817	2.14		0.6	4585	829	2.17
	0.8	4498	858	2.25		0.8	4435	878	2.30
	1.0	4390	897	2.35		1.0	4325	936	2.45
	1.2	4272	939	2.46		1.2	4203	964	2.52
	1.4	4161	979	2.56		1.4	4054	1015	2.66
	1.6	4075	1015	2.66		1.6	3972	1042	2.73
	1.8	3990	1049	2.75		1.8	3862	1076	2.82
	2.0	3874	1073	2.81		2.0	3754	1105	2.89
T5	0.2	-	-	-	T5	0.2	4987	771	2.15
	0.4	4903	793	2.21		0.4	4865	814	2.27
	0.6	4772	838	2.33		0.6	4771	846	2.36
	0.8	4671	875	2.44		0.8	4604	906	2.52
	1.0	4564	913	2.54		1.0	4448	959	2.67
	1.2	4448	954	2.66		1.2	4356	990	2.76
	1.4	4348	990	2.76		1.4	4235	1030	2.87
	1.6	4233	1030	2.87		1.6	4121	1066	2.97
	1.8	4121	1070	2.98		1.8	4022	1100	3.06
	2.0	4030	1100	3.06		2.0	3896	1134	3.16
T6	0.2	4794	723	1.85	T6	0.2	4747	741	1.90
	0.4	4672	767	1.96		0.4	4634	783	2.00
	0.6	4545	810	2.07		0.6	4527	824	2.11
	0.8	4443	852	2.18		0.8	4389	870	2.23
	1.0	4332	891	2.28		1.0	4266	926	2.37
	1.2	4215	933	2.39		1.2	4139	956	2.45
	1.4	4100	975	2.50		1.4	3996	1010	2.59
	1.6	3987	1011	2.59		1.6	3885	1042	2.67
	1.8	3894	1048	2.68		1.8	3762	1083	2.77
	2.0	3773	1075	2.75		2.0	3659	1112	2.85

10.0 Ton Cooler • High Static Direct Drive

Models: DRC1203W, DRC1204W, DRC1207W

Down Flow					Horizontal Flow				
Speed Tap	ESP	CFM	RPM	BHP	Speed Tap	ESP	CFM	RPM	BHP
T7	0.2	-	-	-	T7	0.2	4987	771	2.15
	0.4	4903	793	2.21		0.4	4865	814	2.27
	0.6	4772	838	2.33		0.6	4771	846	2.36
	0.8	4671	875	2.44		0.8	4604	906	2.52
	1.0	4564	913	2.54		1.0	4448	959	2.67
	1.2	4448	954	2.66		1.2	4356	990	2.76
	1.4	4348	990	2.76		1.4	4235	1030	2.87
	1.6	4233	1030	2.87		1.6	4121	1066	2.97
	1.8	4121	1070	2.98		1.8	4022	1100	3.06
	2.0	4030	1100	3.06		2.0	3896	1134	3.16
T8	0.2	4794	723	1.85	T8	0.2	4747	741	1.90
	0.4	4672	767	1.96		0.4	4634	783	2.00
	0.6	4545	810	2.07		0.6	4527	824	2.11
	0.8	4443	852	2.18		0.8	4389	870	2.23
	1.0	4332	891	2.28		1.0	4266	926	2.37
	1.2	4215	933	2.39		1.2	4139	956	2.45
	1.4	4100	975	2.50		1.4	3996	1010	2.59
	1.6	3987	1011	2.59		1.6	3885	1042	2.67
	1.8	3894	1048	2.68		1.8	3762	1083	2.77
	2.0	3773	1075	2.75		2.0	3659	1112	2.85
T9	0.2	4851	729	1.91	T9	0.2	4807	748	1.96
	0.4	4729	773	2.02		0.4	4688	791	2.07
	0.6	4600	817	2.14		0.6	4585	829	2.17
	0.8	4498	858	2.25		0.8	4435	878	2.30
	1.0	4390	897	2.35		1.0	4325	936	2.45
	1.2	4272	939	2.46		1.2	4203	964	2.52
	1.4	4161	979	2.56		1.4	4054	1015	2.66
	1.6	4075	1015	2.66		1.6	3972	1042	2.73
	1.8	3990	1049	2.75		1.8	3862	1076	2.82
	2.0	3874	1073	2.81		2.0	3754	1105	2.89
T10	0.2	-	-	-	T10	0.2	4987	771	2.15
	0.4	4903	793	2.21		0.4	4865	814	2.27
	0.6	4772	838	2.33		0.6	4771	846	2.36
	0.8	4671	875	2.44		0.8	4604	906	2.52
	1.0	4564	913	2.54		1.0	4448	959	2.67
	1.2	4448	954	2.66		1.2	4356	990	2.76
	1.4	4348	990	2.76		1.4	4235	1030	2.87
	1.6	4233	1030	2.87		1.6	4121	1066	2.97
	1.8	4121	1070	2.98		1.8	4022	1100	3.06
	2.0	4030	1100	3.06		2.0	3896	1134	3.16

12.5 Ton Cooler • Standard Static Direct Drive

Models: DRC1503D, DRC1504D, DRC1507D

Down Flow				
Speed Tap	**ESP**	**CFM**	**RPM**	**BHP**
T1	0.2	2820	480	0.41
	0.4	-	-	-
	0.6	-	-	-
	0.8	-	-	-
T2	0.2	3608	530	0.66
	0.4	3304	619	0.77
	0.6	2987	710	0.89
	0.8	2559	808	1.01
T3	0.2	4415	602	1.15
	0.4	4241	672	1.29
	0.6	4013	758	1.45
	0.8	3811	825	1.58
T4	0.2	5156	650	1.62
	0.4	4977	713	1.78
	0.6	4785	780	1.94
	0.8	4580	856	2.13
T5	0.2	5420	667	1.84
	0.4	5273	730	2.01
	0.6	5092	804	2.21
	0.8	4863	865	2.38
T6	0.2	4415	602	1.15
	0.4	4241	672	1.29
	0.6	4013	758	1.45
	0.8	3811	825	1.58
T7	0.2	4914	644	1.47
	0.4	4736	705	1.61
	0.6	4509	766	1.75
	0.8	4284	846	1.93
T8	0.2	4415	602	1.15
	0.4	4241	672	1.29
	0.6	4013	758	1.45
	0.8	3811	825	1.58
T9	0.2	4623	623	1.30
	0.4	4457	699	1.46
	0.6	4242	772	1.62
	0.8	4029	837	1.75
T10	0.2	4914	644	1.47
	0.4	4736	705	1.61
	0.6	4509	766	1.75
	0.8	4284	846	1.93

Horizontal Flow				
Speed Tap	**ESP**	**CFM**	**RPM**	**BHP**
T1	0.2	2620	509	0.44
	0.4	-	-	-
	0.6	-	-	-
	0.8	-	-	-
T2	0.2	3256	567	0.71
	0.4	3076	640	0.80
	0.6	2960	682	0.85
	0.8	2616	766	0.96
T3	0.2	4179	689	1.32
	0.4	4042	731	1.40
	0.6	3895	782	1.50
	0.8	3754	822	1.58
T4	0.2	4840	747	1.86
	0.4	4688	805	2.00
	0.6	4591	841	2.09
	0.8	4461	885	2.20
T5	0.2	5098	774	2.13
	0.4	4936	831	2.29
	0.6	4835	867	2.39
	0.8	4725	908	2.50
T6	0.2	4179	689	1.32
	0.4	4042	731	1.40
	0.6	3895	782	1.50
	0.8	3754	822	1.58
T7	0.2	4614	734	1.68
	0.4	4501	781	1.79
	0.6	4389	820	1.87
	0.8	4262	865	1.98
T8	0.2	4179	689	1.32
	0.4	4042	731	1.40
	0.6	3895	782	1.50
	0.8	3754	822	1.58
T9	0.2	4418	715	1.50
	0.4	4294	755	1.58
	0.6	4170	800	1.68
	0.8	4026	841	1.76
T10	0.2	4614	734	1.68
	0.4	4501	781	1.79
	0.6	4389	820	1.87
	0.8	4262	865	1.98

12.5 Ton Cooler • Medium Static Direct Drive

Models: DRC1503L, DRC1504L, DRC1507L

Down Flow				
Speed Tap	**ESP**	**CFM**	**RPM**	**BHP**
T1	0.2	2820	480	0.41
	0.4	-	-	-
	0.6	-	-	-
	0.8	-	-	-
	1.0	-	-	-
	1.2	-	-	-
	1.4	-	-	-
T2	0.2	4298	596	1.09
	0.4	4122	663	1.21
	0.6	3899	755	1.38
	0.8	3711	820	1.50
	1.0	3488	886	1.62
	1.2	2970	1010	1.85
	1.4	2808	1058	1.94
T3	0.2	4415	602	1.15
	0.4	4241	672	1.29
	0.6	4013	758	1.45
	0.8	3811	825	1.58
	1.0	-	-	-
	1.2	-	-	-
	1.4	-	-	-
T4	0.2	5156	650	1.62
	0.4	4977	713	1.78
	0.6	4785	780	1.94
	0.8	4580	856	2.13
	1.0	4342	921	2.29
	1.2	4113	981	2.44
	1.4	3884	1037	2.58
T5	0.2	5420	667	1.84
	0.4	5273	730	2.01
	0.6	5092	804	2.21
	0.8	4863	865	2.38
	1.0	4651	936	2.58
	1.2	4429	1001	2.76
	1.4	4197	1020	2.81
T6	0.2	4914	644	1.47
	0.4	4736	705	1.61
	0.6	4509	766	1.75
	0.8	4284	846	1.93
	1.0	4076	915	2.1
	1.2	3843	970	2.22
	1.4	-	-	-
T7	0.2	5420	667	1.84
	0.4	5273	730	2.01
	0.6	5092	804	2.21
	0.8	4863	865	2.38
	1.0	4651	936	2.58
	1.2	4429	1001	2.76
	1.4	4197	1020	2.81
T8	0.2	4914	644	1.47
	0.4	4736	705	1.61
	0.6	4509	766	1.75
	0.8	4284	846	1.93
	1.0	4076	915	2.1
	1.2	3843	970	2.22
	1.4	-	-	-
T9	0.2	5156	650	1.62
	0.4	4977	713	1.78
	0.6	4785	780	1.94
	0.8	4580	856	2.13
	1.0	4342	921	2.29
	1.2	4113	981	2.44
	1.4	3884	1037	2.58
T10	0.2	5420	667	1.84
	0.4	5273	730	2.01
	0.6	5092	804	2.21
	0.8	4863	865	2.38
	1.0	4651	936	2.58
	1.2	4429	1001	2.76
	1.4	4197	1020	2.81

Horizontal Flow				
Speed Tap	**ESP**	**CFM**	**RPM**	**BHP**
T1	0.2	2620	509	0.44
	0.4	-	-	-
	0.6	-	-	-
	0.8	-	-	-
	1.0	-	-	-
	1.2	-	-	-
	1.4	-	-	-
T2	0.2	4044	674	1.23
	0.4	3891	719	1.32
	0.6	3736	773	1.41
	0.8	3589	813	1.49
	1.0	3448	850	1.56
	1.2	3310	891	1.63
	1.4	3162	937	1.71
T3	0.2	4179	689	1.32
	0.4	4042	731	1.40
	0.6	3895	782	1.50
	0.8	3754	822	1.58
	1.0	-	-	-
	1.2	-	-	-
	1.4	-	-	-
T4	0.2	4840	747	1.86
	0.4	4688	805	2.00
	0.6	4591	841	2.09
	0.8	4461	885	2.20
	1.0	4342	925	2.30
	1.2	4235	955	2.38
	1.4	4104	992	2.47
T5	0.2	5098	774	2.13
	0.4	4936	831	2.29
	0.6	4835	867	2.39
	0.8	4725	908	2.50
	1.0	4607	954	2.63
	1.2	4489	983	2.71
	1.4	4386	1016	2.80
T6	0.2	4614	734	1.68
	0.4	4501	781	1.79
	0.6	4389	820	1.87
	0.8	4262	865	1.98
	1.0	4139	903	2.06
	1.2	4017	938	2.1
	1.4	3884	973	2.2
T7	0.2	5098	774	2.13
	0.4	4936	831	2.29
	0.6	4835	867	2.39
	0.8	4725	908	2.50
	1.0	4607	954	2.63
	1.2	4489	983	2.71
	1.4	4386	1016	2.80
T8	0.2	4614	734	1.68
	0.4	4501	781	1.79
	0.6	4389	820	1.87
	0.8	4262	865	1.98
	1.0	4139	903	2.06
	1.2	4017	938	2.1
	1.4	3884	973	2.2
T9	0.2	4840	747	1.86
	0.4	4688	805	2.00
	0.6	4591	841	2.09
	0.8	4461	885	2.20
	1.0	4342	925	2.30
	1.2	4235	955	2.38
	1.4	4104	992	2.47
T10	0.2	5098	774	2.13
	0.4	4936	831	2.29
	0.6	4835	867	2.39
	0.8	4725	908	2.50
	1.0	4607	954	2.63
	1.2	4489	983	2.71
	1.4	4386	1016	2.80

12.5 Ton Cooler • High Static Direct Drive

Models: DRC1503W, DRC1504W, DRC1507W

Down Flow				
Speed Tap	ESP	CFM	RPM	BHP
T1	0.2	2504	531	0.46
	0.4	-	-	-
	0.6	-	-	-
	0.8	-	-	-
	1.0	-	-	-
	1.2	-	-	-
	1.4	-	-	-
	1.6	-	-	-
	1.8	-	-	-
	2.0	-	-	-
T2	0.2	4164	759	1.56
	0.4	4107	794	1.64
	0.6	3980	840	1.73
	0.8	3882	882	1.82
	1.0	3738	931	1.92
	1.2	3438	1005	2.07
	1.4	3189	1069	2.20
	1.6	3026	1108	2.28
	1.8	2930	1129	2.33
	2.0	2843	1155	2.38
T3	0.2	4164	759	1.56
	0.4	4107	794	1.64
	0.6	3980	840	1.73
	0.8	3882	882	1.82
	1.0	-	-	-
	1.2	-	-	-
	1.4	-	-	-
	1.6	-	-	-
	1.8	-	-	-
	2.0	-	-	-
T4	0.2	5401	945	3.38
	0.4	5314	977	3.49
	0.6	5214	1011	3.61
	0.8	5142	1041	3.72
	1.0	5050	1073	3.83
	1.2	4952	1107	3.95
	1.4	4863	1139	4.07
	1.6	4742	1175	4.20
	1.8	4627	1210	4.32
	2.0	4511	1247	4.45
T5	0.2	5671	990	3.95
	0.4	5580	1019	4.06
	0.6	5495	1049	4.18
	0.8	5419	1077	4.30
	1.0	5345	1109	4.42
	1.2	5257	1139	4.54
	1.4	5162	1169	4.66
	1.6	5060	1205	4.81
	1.8	4938	1240	4.95
	2.0	4824	1273	5.08
T6	0.2	4891	868	2.42
	0.4	4809	902	2.51
	0.6	4718	939	2.62
	0.8	4628	972	2.71
	1.0	4531	1006	2.80
	1.2	4419	1047	2.92
	1.4	4304	1086	3.03
	1.6	4186	1123	3.13
	1.8	4064	1157	3.22
	2.0	-	-	-

Horizontal Flow				
Speed Tap	ESP	CFM	RPM	BHP
T1	0.2	2102	495	0.36
	0.4	1906	566	0.41
	0.6	-	-	-
	0.8	-	-	-
	1.0	-	-	-
	1.2	-	-	-
	1.4	-	-	-
	1.6	-	-	-
	1.8	-	-	-
	2.0	-	-	-
T2	0.2	3642	714	1.23
	0.4	3544	743	1.28
	0.6	3415	786	1.36
	0.8	3278	827	1.43
	1.0	3147	870	1.50
	1.2	2998	915	1.58
	1.4	2852	971	1.68
	1.6	2666	1010	1.74
	1.8	2482	1060	1.83
	2.0	2323	1096	1.89
T3	0.2	3336	657	0.96
	0.4	3185	696	1.02
	0.6	3029	750	1.10
	0.8	2862	796	1.17
	1.0	2699	840	1.23
	1.2	2509	893	1.31
	1.4	2320	954	1.40
	1.6	-	-	-
	1.8	-	-	-
	2.0	-	-	-
T4	0.2	-	-	-
	0.4	-	-	-
	0.6	-	-	-
	0.8	-	-	-
	1.0	-	-	-
	1.2	3674	995	2.31
	1.4	3566	1035	2.40
	1.6	3459	1067	2.48
	1.8	3361	1097	2.55
	2.0	3261	1134	2.63
T5	0.2	-	-	-
	0.4	-	-	-
	0.6	-	-	-
	0.8	-	-	-
	1.0	-	-	-
	1.2	-	-	-
	1.4	3795	1047	2.62
	1.6	3706	1077	2.69
	1.8	3641	1114	2.79
	2.0	3565	1145	2.86
T6	0.2	2728	568	0.60
	0.4	2533	625	0.66
	0.6	2314	695	0.74
	0.8	2125	749	0.79
	1.0	1875	792	0.84
	1.2	-	-	-
	1.4	-	-	-
	1.6	-	-	-
	1.8	-	-	-
	2.0	-	-	-

12.5 Ton Cooler • High Static Direct Drive

Models: DRC1503W, DRC1504W, DRC1507W

Down Flow					Horizontal Flow				
Speed Tap	ESP	CFM	RPM	BHP	Speed Tap	ESP	CFM	RPM	BHP
T7	0.2	5401	945	3.38	T7	0.2	5489	873	3.12
	0.4	5314	977	3.49		0.4	5410	904	3.23
	0.6	5214	1011	3.61		0.6	5325	937	3.35
	0.8	5142	1041	3.72		0.8	5235	970	3.46
	1.0	5050	1073	3.83		1.0	5136	1004	3.59
	1.2	4952	1107	3.95		1.2	5038	1043	3.73
	1.4	4863	1139	4.07		1.4	4936	1083	3.87
	1.6	4742	1175	4.20		1.6	4819	1123	4.01
	1.8	4627	1210	4.32		1.8	4699	1166	4.16
	2.0	4511	1247	4.45		2.0	4595	1196	4.27
T8	0.2	4891	868	2.42	T8	0.2	4970	803	2.24
	0.4	4809	902	2.51		0.4	4889	840	2.34
	0.6	4718	939	2.62		0.6	4799	877	2.44
	0.8	4628	972	2.71		0.8	4702	921	2.57
	1.0	4531	1006	2.80		1.0	4614	953	2.65
	1.2	4419	1047	2.92		1.2	4492	1001	2.79
	1.4	4304	1086	3.03		1.4	4364	1053	2.93
	1.6	4186	1123	3.13		1.6	4259	1081	3.01
	1.8	4064	1157	3.22		1.8	4129	1122	3.13
	2.0	-	-	-		2.0	4011	1156	3.22
T9	0.2	5197	915	3.05	T9	0.2	5282	846	2.82
	0.4	5109	947	3.16		0.4	5199	847	2.82
	0.6	5007	980	3.27		0.6	5113	870	2.90
	0.8	4933	1014	3.38		0.8	5017	915	3.05
	1.0	4845	1047	3.49		1.0	4913	982	3.27
	1.2	4737	1083	3.61		1.2	4817	1026	3.42
	1.4	4638	1118	3.73		1.4	4716	1067	3.56
	1.6	4520	1153	3.84		1.6	4598	1108	3.69
	1.8	4398	1191	3.97		1.8	4479	1147	3.82
	2.0	4285	1222	4.07		2.0	4360	1179	3.93
T10	0.2	5401	945	3.38	T10	0.2	5489	873	3.12
	0.4	5314	977	3.49		0.4	5410	904	3.23
	0.6	5214	1011	3.61		0.6	5325	937	3.35
	0.8	5142	1041	3.72		0.8	5235	970	3.46
	1.0	5050	1073	3.83		1.0	5136	1004	3.59
	1.2	4952	1107	3.95		1.2	5038	1043	3.73
	1.4	4863	1139	4.07		1.4	4936	1083	3.87
	1.6	4742	1175	4.20		1.6	4819	1123	4.01
	1.8	4627	1210	4.32		1.8	4699	1166	4.16
	2.0	4511	1247	4.45		2.0	4595	1196	4.27

7.5 Ton Models: DRC0903D, DRC0904D & DRG0907D with DDC Controls • Standard Static to 1.7 HP (0.2 ~ 0.8 Esp) • Down Flow

CFM	0.2			0.4			0.6			0.8			1.0		
	RPM	DDC %	BHP	RPM	DDC %	BHP	RPM	DDC %	BHP	RPM	DDC %	BHP	RPM	DDC %	BHP
1400										782	22	0.49	-	-	-
1600				647	20	0.37	717	22	0.43	801	25	0.57	-	-	-
1800	555	20	0.33	671	23	0.44	740	25	0.50	820	28	0.65	-	-	-
2000	587	23	0.40	696	26	0.51	763	28	0.57	839	30	0.75	-	-	-
2200	619	27	0.48	720	29	0.60	786	31	0.66	858	33	0.87	-	-	-
2400	651	30	0.57	745	32	0.71	809	34	0.76	877	36	1.00	-	-	-
2600	683	33	0.69	769	35	0.83	832	37	0.87	896	39	1.15	-	-	-
2800	715	36	0.82	794	38	0.98	855	40	1.00	915	42	1.32	-	-	-
3000	747	39	0.99	818	41	1.14	878	43	1.15	934	45	1.52	-	-	-
3200	779	43	1.18	843	44	1.34	901	46	1.33	953	47	1.74	-	-	-
3400	810	46	1.41	867	47	1.58	924	49	1.53				-	-	-
3600	842	49	1.69										-	-	-

Shaded area indicates air flow below 2250 SCFM (300 SCFM/ton) that is not recommended for High Stage cooling or heating.
Valid motor operating range for DDC% setting is 20 - 90.

HORIZONTAL FLOW

CFM	0.2			0.4			0.6			0.8			1.0		
	RPM	DDC %	BHP	RPM	DDC %	BHP	RPM	DDC %	BHP	RPM	DDC %	BHP	RPM	DDC %	BHP
1400	409	25	0.23	518	20	0.32	597	20	0.41	720	24	0.59	-	-	-
1600	440	27	0.27	542	23	0.37	619	22	0.48	733	27	0.67	-	-	-
1800	471	30	0.33	567	25	0.44	641	26	0.55	745	30	0.75	-	-	-
2000	502	32	0.39	591	28	0.51	664	29	0.63	758	32	0.85	-	-	-
2200	533	35	0.47	616	31	0.60	686	32	0.72	771	35	0.96	-	-	-
2400	564	37	0.56	640	34	0.71	708	35	0.83	784	38	1.08	-	-	-
2600	595	39	0.67	665	37	0.83	730	38	0.96	797	40	1.22	-	-	-
2800	626	42	0.81	690	39	0.97	752	41	1.10	809	43	1.37	-	-	-
3000	657	44	0.97	714	42	1.14	774	44	1.27	822	46	1.55	-	-	-
3200	688	47	1.16	739	45	1.34	796	47	1.46	835	48	1.75	-	-	-
3400	718	49	1.38	763	48	1.57	818	51	1.68				-	-	-
3600	749	52	1.66										-	-	-

Shaded area indicates air flow below 2250 SCFM (300 SCFM/ton) that is not recommended for High Stage cooling or heating.
Valid motor operating range for DDC% setting is 20 - 90.

7.5 Ton Models: DRC0903L, DRC0904L & DRC0907L with DDC Controls • Medium Static to 2.4 HP (0.2 ~ 1.4 Esp) • Down Flow

CFM	0.2			0.4			0.6			0.8			1.0		
	RPM	DDC %	BHP	RPM	DDC %	BHP	RPM	DDC %	BHP	RPM	DDC %	BHP	RPM	DDC %	BHP
1400	486	12	0.24	594	16	0.31	691	18	0.38	782	21	0.49	821	16	0.58
1600	519	16	0.28	622	19	0.36	715	22	0.43	802	24	0.57	843	20	0.66
1800	553	19	0.34	651	22	0.42	740	25	0.50	822	27	0.65	865	24	0.74
2000	586	23	0.41	679	26	0.50	764	28	0.57	843	30	0.75	887	28	0.84
2200	619	26	0.49	708	29	0.58	788	31	0.66	863	34	0.86	909	32	0.94
2400	652	30	0.58	736	32	0.69	813	35	0.76	883	37	0.99	931	35	1.06
2600	685	33	0.70	764	36	0.80	837	38	0.87	903	40	1.14	953	39	1.20
2800	719	37	0.84	793	39	0.94	861	41	1.00	923	43	1.31	975	43	1.35
3000	752	40	1.00	821	43	1.11	886	44	1.15	943	46	1.51	997	47	1.52
3200	785	44	1.20	849	46	1.30	910	48	1.33	964	49	1.73	1019	51	1.72
3400	818	47	1.43	878	49	1.53	935	51	1.53	984	52	1.99	1041	55	1.94
3600	852	51	1.72	906	53	1.79	959	54	1.76	1004	55	2.29	1063	59	2.18
3800	885	54	2.05	935	56	2.10	983	57	2.02						

CFM	1.2			1.4			1.6			1.8			2.0		
	RPM	DDC %	BHP	RPM	DDC %	BHP	RPM	DDC %	BHP	RPM	DDC %	BHP	RPM	DDC %	BHP
1400	919	23	0.76	1040	28	1.00	-	-	-	-	-	-	-	-	-
1600	936	26	0.84	1048	31	1.08	-	-	-	-	-	-	-	-	-
1800	952	29	0.93	1056	34	1.17	-	-	-	-	-	-	-	-	-
2000	969	33	1.02	1064	37	1.27	-	-	-	-	-	-	-	-	-
2200	986	36	1.13	1071	40	1.38	-	-	-	-	-	-	-	-	-
2400	1002	39	1.25	1079	43	1.49	-	-	-	-	-	-	-	-	-
2600	1019	43	1.38	1087	46	1.62	-	-	-	-	-	-	-	-	-
2800	1035	46	1.53	1095	49	1.75	-	-	-	-	-	-	-	-	-
3000	1052	49	1.69	1102	52	1.90	-	-	-	-	-	-	-	-	-
3200	1068	53	1.86	1110	55	2.05	-	-	-	-	-	-	-	-	-
3400	1085	56	2.06	1118	57	2.22	-	-	-	-	-	-	-	-	-
3600	1101	60	2.28	1126	60	2.41	-	-	-	-	-	-	-	-	-
3800							-	-	-	-	-	-	-	-	-

Shaded area indicates air flow below 2250 SCFM (300 SCFM/ton) that is not recommended for High Stage cooling or heating.
Valid motor operating range for DDC% setting is 20 - 90.

HORIZONTAL FLOW

CFM	0.2			0.4			0.6			0.8			1.0		
	RPM	DDC %	BHP	RPM	DDC %	BHP	RPM	DDC %	BHP	RPM	DDC %	BHP	RPM	DDC %	BHP
1400	421	16	0.20	507	19	0.31	560	16	0.39	652	20	0.53	736	24	0.61
1600	450	19	0.24	535	22	0.36	587	20	0.45	675	24	0.60	755	27	0.67
1800	478	22	0.28	562	25	0.42	615	24	0.50	697	27	0.67	775	30	0.74
2000	506	25	0.33	590	28	0.50	643	27	0.57	720	30	0.76	794	33	0.82
2200	534	29	0.39	618	31	0.58	670	31	0.64	742	34	0.85	813	36	0.90
2400	563	32	0.46	645	34	0.69	698	34	0.72	765	37	0.96	833	40	1.00
2600	591	35	0.53	673	38	0.81	725	38	0.81	788	40	1.09	852	43	1.10
2800	619	38	0.63	701	41	0.94	753	41	0.91	810	43	1.22	872	46	1.22
3000	647	41	0.74	728	44	1.11	780	45	1.03	833	47	1.38	891	49	1.35
3200	675	45	0.86	756	47	1.30	808	48	1.16	856	50	1.56	910	52	1.49
3400	704	48	1.01	783	50	1.53	836	52	1.31	878	53	1.76	930	56	1.65
3600	732	51	1.19	811	53	1.79	863	56	1.48	901	57	1.98	949	59	1.82
3800	760	54	1.40	839	56	2.10	891	59	1.67	923	60	2.23	968	62	2.01
CFM	**1.2**			**1.4**			**1.6**			**1.8**			**2.0**		
	RPM	DDC %	BHP	RPM	DDC %	BHP	RPM	DDC %	BHP	RPM	DDC %	BHP	RPM	DDC %	BHP
1400	862	31	0.92	957	35	1.09	-	-	-	-	-	-	-	-	-
1600	872	33	0.99	960	37	1.15	-	-	-	-	-	-	-	-	-
1800	882	36	1.08	964	39	1.22	-	-	-	-	-	-	-	-	-
2000	892	38	1.17	967	41	1.30	-	-	-	-	-	-	-	-	-
2200	902	41	1.26	971	43	1.38	-	-	-	-	-	-	-	-	-
2400	911	43	1.37	974	46	1.46	-	-	-	-	-	-	-	-	-
2600	921	46	1.48	978	48	1.56	-	-	-	-	-	-	-	-	-
2800	931	48	1.60	981	50	1.65	-	-	-	-	-	-	-	-	-
3000	941	51	1.74	985	52	1.75	-	-	-	-	-	-	-	-	-
3200	951	53	1.88	988	55	1.86	-	-	-	-	-	-	-	-	-
3400	961	56	2.04	992	57	1.98	-	-	-	-	-	-	-	-	-
3600	971	59	2.21	995	59	2.10	-	-	-	-	-	-	-	-	-
3800	980	61	2.39	999	61	2.23	-	-	-	-	-	-	-	-	-

Shaded area indicates air flow below 2250 SCFM (300 SCFM/ton) that is not recommended for High Stage cooling or heating.
Valid motor operating range for DDC% setting is 20 - 90.

7.5 Ton Models: DRC0903W, DRC0904W & DRC0907W with DDC Controls • High Static to 3.5 HP (0.2 ~ 2.0 Esp) • Down Flow

CFM	0.2			0.4			0.6			0.8			1.0		
	RPM	DDC %	BHP	RPM	DDC %	BHP	RPM	DDC %	BHP	RPM	DDC %	BHP	RPM	DDC %	BHP
1800	543	22	0.29	651	24	0.42	743	26	0.53	820	27	0.67	863	27	0.73
2000	580	24	0.35	680	27	0.49	766	29	0.61	842	30	0.77	885	30	0.82
2200	616	27	0.42	708	29	0.58	789	31	0.71	863	33	0.88	907	33	0.93
2400	652	30	0.50	736	32	0.68	812	34	0.81	884	35	1.01	929	36	1.05
2600	688	33	0.60	764	34	0.80	835	36	0.93	906	38	1.17	951	39	1.18
2800	725	35	0.71	792	37	0.94	858	38	1.07	927	40	1.34	974	41	1.33
3000	761	38	0.86	820	39	1.10	881	41	1.24	948	43	1.54	996	44	1.50
3200	797	41	1.02	848	42	1.29	904	43	1.42	970	46	1.77	1018	47	1.69
3400	833	44	1.23	876	45	1.52	927	46	1.63	991	48	2.04	1040	50	1.91
3600	870	47	1.47	904	47	1.78	950	48	1.88	1012	51	2.35	1062	52	2.15
3800	906	49	1.76	933	50	2.09	974	51	2.16	1033	53	2.70	1084	55	2.43
CFM	1.2			1.4			1.6			1.8			2.0		
	RPM	DDC %	BHP	RPM	DDC %	BHP	RPM	DDC %	BHP	RPM	DDC %	BHP	RPM	DDC %	BHP
1800	948	31	0.90	1059	32	1.10	1137	35	1.48	1180	37	1.59	1217	39	1.54
2000	965	34	1.00	1068	35	1.19	1141	38	1.60	1185	39	1.72	1232	41	1.67
2200	981	36	1.10	1077	37	1.29	1145	40	1.73	1190	41	1.87	1246	43	1.81
2400	998	39	1.22	1087	39	1.40	1149	42	1.88	1195	43	2.02	1260	45	1.96
2600	1014	41	1.35	1096	42	1.52	1154	44	2.03	1200	45	2.19	1274	47	2.12
2800	1031	43	1.49	1105	44	1.64	1158	46	2.20	1205	48	2.37	1288	49	2.30
3000	1047	46	1.64	1115	47	1.78	1162	48	2.39	1210	50	2.57	1302	51	2.49
3200	1064	48	1.82	1124	49	1.93	1166	51	2.59	1215	52	2.78	1316	53	2.69
3400	1080	51	2.01	1133	52	2.09	1171	53	2.80	1220	54	3.02	1331	55	2.92
3600	1097	53	2.22	1143	54	2.26	1175	55	3.03	1225	56	3.27	1345	57	3.16
3800	1113	56	2.45	1152	56	2.45	1179	57	3.29	1230	59	3.50	1359	59	3.43

Shaded area indicates air flow below 2250 SCFM (300 SCFM/ton) that is not recommended for High Stage cooling or heating.
Valid motor operating range for DDC% setting is 20 - 90.

HORIZONTAL FLOW

CFM	0.2			0.4			0.6			0.8			1.0		
	RPM	DDC %	BHP	RPM	DDC %	BHP	RPM	DDC %	BHP	RPM	DDC %	BHP	RPM	DDC %	BHP
1800	466	22	0.29	567	27	0.42	632	29	0.51	673	28	0.65	762	30	0.75
2000	499	24	0.35	595	29	0.49	657	32	0.58	700	30	0.75	784	33	0.85
2200	532	27	0.42	622	31	0.58	681	34	0.65	727	33	0.87	806	35	0.96
2400	565	29	0.50	650	34	0.68	706	36	0.73	754	36	1.00	829	38	1.08
2600	598	32	0.60	677	36	0.80	731	38	0.82	781	38	1.15	851	40	1.21
2800	630	34	0.71	705	38	0.93	756	40	0.93	809	41	1.32	873	43	1.37
3000	663	37	0.85	732	41	1.10	780	42	1.05	836	44	1.52	895	45	1.54
3200	696	40	1.02	760	43	1.29	805	44	1.18	863	46	1.74	918	48	1.74
3400	729	42	1.22	788	45	1.51	830	47	1.33	890	49	2.01	940	50	1.96
3600	762	45	1.47	815	47	1.77	854	49	1.50	917	52	2.31	962	53	2.21
3800	795	47	1.75	843	50	2.08	879	51	1.69	945	54	2.65	984	55	2.50
CFM	1.2			1.4			1.6			1.8			2.0		
	RPM	DDC %	BHP	RPM	DDC %	BHP	RPM	DDC %	BHP	RPM	DDC %	BHP	RPM	DDC %	BHP
1800	843	32	0.83	968	36	1.27	1025	38	1.51	1066	39	1.63	1112	40	1.79
2000	860	35	0.92	974	38	1.37	1029	40	1.63	1070	41	1.76	1118	43	1.94
2200	877	37	1.02	980	40	1.49	1033	42	1.77	1074	43	1.91	1124	45	2.10
2400	895	40	1.12	986	42	1.61	1037	44	1.92	1079	45	2.07	1130	47	2.27
2600	912	42	1.24	992	44	1.74	1041	46	2.08	1083	47	2.24	1135	49	2.46
2800	929	44	1.37	998	46	1.89	1045	48	2.25	1087	49	2.43	1141	51	2.67
3000	947	47	1.52	1004	48	2.05	1048	50	2.44	1092	51	2.63	1147	53	2.89
3200	964	49	1.67	1009	51	2.22	1052	52	2.64	1096	53	2.85	1153	55	3.13
3400	981	52	1.85	1015	53	2.40	1056	54	2.86	1100	55	3.09	1159	57	3.39
3600	999	54	2.05	1021	55	2.60	1060	56	3.10	1105	57	3.35			
3800	1016	56	2.26	1027	57	2.82	1064	58	3.36						

Shaded area indicates air flow below 2250 SCFM (300 SCFM/ton) that is not recommended for High Stage cooling or heating.
Valid motor operating range for DDC% setting is 20 - 90.

8.5 Ton Models: DRC1023D, DRC1024D & DRC1027D with DDC Controls • Standard Static to 2.4 HP (0.2 ~ 0.8 Esp) • Down Flow

CFM	0.2			0.4			0.6			0.8			1.0		
	RPM	DDC %	BHP	RPM	DDC %	BHP	RPM	DDC %	BHP	RPM	DDC %	BHP	RPM	DDC %	BHP
1600							607	21	0.48	801	25	0.61	-	-	-
1800	424	19	0.37	515	22	0.46	625	24	0.54	820	28	0.69	-	-	-
2000	452	22	0.44	539	26	0.54	642	28	0.61	839	30	0.77	-	-	-
2200	480	26	0.53	563	29	0.63	659	31	0.68	858	33	0.87	-	-	-
2400	507	29	0.63	588	32	0.74	677	35	0.77	877	36	0.98	-	-	-
2600	535	33	0.76	612	36	0.87	694	38	0.87	896	39	1.11	-	-	-
2800	563	36	0.90	636	39	1.02	711	42	0.98	915	42	1.25	-	-	-
3000	590	40	1.08	660	42	1.20	729	45	1.10	934	45	1.41	-	-	-
3200	618	43	1.30	684	46	1.41	746	48	1.24	953	47	1.59	-	-	-
3400	646	46	1.55	708	49	1.65	763	52	1.40	972	50	1.79	-	-	-
3600	673	50	1.86	733	52	1.94	781	55	1.58	991	53	2.02	-	-	-
3800	701	53	2.23	757	56	2.28	798	59	1.78	1010	56	2.28	-	-	-

Shaded area indicates air flow below 2550 SCFM (300 SCFM/ton) that is not recommended for High Stage cooling or heating.
Valid motor operating range for DDC% setting is 20 - 90.

HORIZONTAL FLOW

CFM	0.2			0.4			0.6			0.8			1.0		
	RPM	DDC %	BHP	RPM	DDC %	BHP	RPM	DDC %	BHP	RPM	DDC %	BHP	RPM	DDC %	BHP
1600										611	21	0.49	-	-	-
1800				496	21	0.34	581	22	0.47	632	24	0.56	-	-	-
2000	435	21	0.32	521	24	0.39	603	26	0.53	654	28	0.63	-	-	-
2200	464	25	0.37	546	28	0.45	626	29	0.59	675	31	0.71	-	-	-
2400	494	28	0.43	571	31	0.52	648	33	0.67	696	34	0.80	-	-	-
2600	523	32	0.51	596	35	0.60	671	36	0.75	718	38	0.90	-	-	-
2800	552	35	0.60	621	38	0.69	693	40	0.85	739	41	1.01	-	-	-
3000	581	39	0.70	646	41	0.79	715	44	0.96	760	45	1.14	-	-	-
3200	611	43	0.82	671	45	0.91	738	47	1.08	782	48	1.29	-	-	-
3400	640	46	0.97	695	48	1.05	760	51	1.22	803	51	1.45	-	-	-
3600	669	50	1.13	720	52	1.20	782	54	1.37	824	55	1.64	-	-	-
3800	699	53	1.33	745	55	1.39	805	58	1.55	846	58	1.85	-	-	-

Shaded area indicates air flow below 2550 SCFM (300 SCFM/ton) that is not recommended for High Stage cooling or heating.
Valid motor operating range for DDC% setting is 20 - 90.

8.5 Ton Models: DRC1023L, DRC1024L & DRC1027L with DDC Controls • Medium Static to 2.4 HP (0.2 ~ 1.4 Esp) • Down Flow

CFM	0.2			0.4			0.6			0.8			1.0		
	RPM	DDC %	BHP	RPM	DDC %	BHP	RPM	DDC %	BHP	RPM	DDC %	BHP	RPM	DDC %	BHP
1600				491	20	0.37	586	23	0.48	642	24	0.66	736	28	0.81
1800	423	20	0.30	515	23	0.41	608	26	0.54	663	27	0.73	754	31	0.87
2000	451	23	0.35	540	26	0.47	629	30	0.61	684	31	0.80	771	35	0.95
2200	479	26	0.41	564	30	0.53	650	33	0.69	706	34	0.89	789	38	1.03
2400	507	30	0.48	589	33	0.59	672	36	0.78	727	37	0.98	806	41	1.11
2600	535	33	0.56	613	36	0.67	693	39	0.88	749	41	1.09	823	45	1.20
2800	563	36	0.66	638	39	0.75	714	42	0.99	770	44	1.20	841	48	1.30
3000	591	40	0.77	662	42	0.85	736	46	1.11	791	48	1.33	858	51	1.41
3200	619	43	0.90	686	46	0.96	757	49	1.25	813	51	1.47	875	54	1.53
3400	647	46	1.06	711	49	1.08	778	52	1.41	834	54	1.62	893	58	1.66
3600	675	50	1.25	735	52	1.22	800	55	1.59	855	58	1.79	910	61	1.80
3800	703	53	1.46	760	55	1.37	821	58	1.80	877	61	1.98	928	64	1.95
CFM	1.2			1.4			1.6			1.8			2.0		
	RPM	DDC %	BHP	RPM	DDC %	BHP	RPM	DDC %	BHP	RPM	DDC %	BHP	RPM	DDC %	BHP
1600	814	33	1.06	858	35	1.07	-	-	-	-	-	-	-	-	-
1800	828	36	1.15	873	38	1.15	-	-	-	-	-	-	-	-	-
2000	842	39	1.24	888	41	1.25	-	-	-	-	-	-	-	-	-
2200	856	42	1.35	903	44	1.35	-	-	-	-	-	-	-	-	-
2400	871	45	1.46	917	47	1.47	-	-	-	-	-	-	-	-	-
2600	885	48	1.58	932	51	1.59	-	-	-	-	-	-	-	-	-
2800	899	51	1.71	947	54	1.72	-	-	-	-	-	-	-	-	-
3000	913	54	1.86	962	57	1.87	-	-	-	-	-	-	-	-	-
3200	927	57	2.01	976	60	2.02	-	-	-	-	-	-	-	-	-
3400	941	60	2.18	991	63	2.19	-	-	-	-	-	-	-	-	-
3600	955	63	2.36	1006	66	2.37	-	-	-	-	-	-	-	-	-
3800							-	-	-	-	-	-	-	-	-

Shaded area indicates air flow below 2550 SCFM (300 SCFM/ton) that is not recommended for High Stage cooling or heating.
Valid motor operating range for DDC% setting is 20 - 90.

HORIZONTAL FLOW

CFM	0.2			0.4			0.6			0.8			1.0		
	RPM	DDC %	BHP	RPM	DDC %	BHP	RPM	DDC %	BHP	RPM	DDC %	BHP	RPM	DDC %	BHP
1600							576	22	0.48	624	21	0.62	717	29	0.81
1800	406	19	0.26	497	21	0.36	596	25	0.54	643	24	0.68	732	33	0.87
2000	435	22	0.30	522	25	0.41	616	28	0.61	663	28	0.76	748	37	0.95
2200	464	25	0.35	547	28	0.46	636	31	0.69	683	31	0.84	763	41	1.03
2400	493	29	0.42	572	31	0.52	656	34	0.78	703	35	0.92	778	45	1.11
2600	521	32	0.49	596	35	0.59	676	38	0.88	723	38	1.02	794	49	1.20
2800	550	36	0.57	621	38	0.66	696	41	0.99	743	41	1.13	809	52	1.30
3000	579	39	0.67	646	42	0.75	716	44	1.11	762	45	1.25	824	56	1.41
3200	608	43	0.79	671	45	0.84	736	47	1.25	782	48	1.38	840	60	1.53
3400	637	46	0.92	696	48	0.95	756	50	1.41	802	52	1.52	855	64	1.66
3600	666	50	1.08	720	52	1.07	776	54	1.59	822	55	1.68	870	68	1.80
3800	695	53	1.27	745	55	1.21	796	57	1.80	842	58	1.86	885	71	1.95

CFM	1.2			1.4			1.6			1.8			2.0		
	RPM	DDC %	BHP	RPM	DDC %	BHP	RPM	DDC %	BHP	RPM	DDC %	BHP	RPM	DDC %	BHP
1600	777	27	0.86	827	29	0.96	-	-	-	-	-	-	-	-	-
1800	790	30	0.93	839	32	1.04	-	-	-	-	-	-	-	-	-
2000	804	33	1.01	852	35	1.13	-	-	-	-	-	-	-	-	-
2200	818	36	1.09	865	38	1.22	-	-	-	-	-	-	-	-	-
2400	831	39	1.18	878	41	1.32	-	-	-	-	-	-	-	-	-
2600	845	43	1.28	890	44	1.43	-	-	-	-	-	-	-	-	-
2800	858	46	1.39	903	47	1.55	-	-	-	-	-	-	-	-	-
3000	872	49	1.51	916	51	1.68	-	-	-	-	-	-	-	-	-
3200	885	52	1.63	929	54	1.82	-	-	-	-	-	-	-	-	-
3400	899	55	1.77	941	57	1.97	-	-	-	-	-	-	-	-	-
3600	913	58	1.91	954	60	2.14	-	-	-	-	-	-	-	-	-
3800	969	61	2.07				-	-	-	-	-	-	-	-	-

Shaded area indicates air flow below 2550 SCFM (300 SCFM/ton) that is not recommended for High Stage cooling or heating.
Valid motor operating range for DDC% setting is 20 - 90.

8.5 Ton Models: DRC1023W, DRC1024W & DRC1027Wwith DDC Controls • High Static to 3.5 HP (0.2 ~ 2.0 Esp) • Down Flow

CFM	0.2			0.4			0.6			0.8			1.0		
	RPM	DDC %	BHP	RPM	DDC %	BHP	RPM	DDC %	BHP	RPM	DDC %	BHP	RPM	DDC %	BHP
1600							586	23	0.43	633	22	0.61	713	21	0.80
1800				509	23	0.37	608	26	0.48	656	25	0.68	734	25	0.89
2000	450	23	0.31	535	26	0.43	630	30	0.54	679	29	0.77	755	30	0.98
2200	478	26	0.35	560	29	0.49	652	33	0.61	702	33	0.87	776	34	1.08
2400	506	30	0.41	586	33	0.56	674	36	0.69	726	37	0.98	796	38	1.20
2600	534	33	0.47	612	36	0.65	695	40	0.78	749	41	1.10	817	42	1.32
2800	562	37	0.54	637	40	0.75	717	43	0.88	772	44	1.24	838	46	1.46
3000	590	40	0.62	663	43	0.86	739	46	0.99	796	48	1.40	859	50	1.62
3200	617	43	0.71	689	46	0.99	761	50	1.11	819	52	1.58	880	55	1.79
3400	645	47	0.82	714	50	1.14	783	53	1.26	842	56	1.78	901	59	1.98
3600	673	50	0.94	740	53	1.31	805	57	1.42	866	59	2.01	921	63	2.18
3800	701	54	1.08	766	56	1.50	827	60	1.60	889	63	2.27	942	67	2.41
4000	729	57	1.24	791	60	1.73	849	63	1.80	912	67	2.55	963	71	2.67
4200	757	61	1.43	817	63	1.99	871	67	2.03	935	71	2.88	984	75	2.95
CFM	1.2			1.4			1.6			1.8			2.0		
	RPM	DDC %	BHP	RPM	DDC %	BHP	RPM	DDC %	BHP	RPM	DDC %	BHP	RPM	DDC %	BHP
1600	784	26	0.93	851	30	1.13	906	33	1.32	966	38	1.31	999	41	1.43
1800	803	30	1.03	869	34	1.25	923	38	1.46	981	42	1.42	1015	45	1.55
2000	822	34	1.14	887	38	1.38	939	42	1.61	997	46	1.53	1031	49	1.67
2200	841	38	1.26	904	42	1.52	956	46	1.78	1012	50	1.66	1048	53	1.81
2400	860	42	1.39	922	46	1.68	973	50	1.97	1028	54	1.80	1064	58	1.97
2600	880	46	1.54	939	50	1.86	990	54	2.17	1043	58	1.95	1080	62	2.13
2800	899	50	1.70	957	54	2.06	1006	58	2.40	1058	62	2.11	1097	66	2.31
3000	918	54	1.88	974	58	2.27	1023	62	2.65	1074	66	2.29	1113	70	2.50
3200	937	59	2.07	992	62	2.51	1040	66	2.93	1089	70	2.48	1130	74	2.71
3400	956	63	2.29	1010	66	2.77	1056	70	3.24	1105	74	2.68	1146	78	2.93
3600	975	67	2.53	1027	71	3.07	1073	74	3.58	1120	78	2.91	1162	82	3.18
3800	994	71	2.80	1045	75	3.39	1090	78	3.66	6	82	3.15	1179	86	3.44
4000	1013	75	3.09	1062	79	3.74									
4200	1032	79	3.42												

Shaded area indicates air flow below 2550 SCFM (300 SCFM/ton) that is not recommended for High Stage cooling or heating.
Valid motor operating range for DDC% setting is 20 - 90.

HORIZONTAL FLOW

CFM	0.2			0.4			0.6			0.8			1.0		
	RPM	DDC %	BHP	RPM	DDC %	BHP	RPM	DDC %	BHP	RPM	DDC %	BHP	RPM	DDC %	BHP
1600													645	20	0.55
1800				472	20	0.37	579	24	0.46	571	20	0.53	670	24	0.63
2000	414	21	0.30	502	24	0.44	604	27	0.53	602	24	0.61	695	28	0.71
2200	448	24	0.35	533	27	0.51	629	31	0.61	633	28	0.70	721	32	0.80
2400	481	28	0.41	563	31	0.60	654	35	0.70	663	32	0.81	746	36	0.90
2600	515	32	0.49	593	35	0.71	679	38	0.81	694	36	0.93	771	40	1.01
2800	549	36	0.57	624	39	0.83	705	42	0.93	725	40	1.07	797	44	1.14
3000	582	40	0.67	654	42	0.97	730	45	1.07	756	45	1.23	822	47	1.29
3200	616	44	0.79	684	46	1.14	755	49	1.23	786	49	1.42	848	51	1.45
3400	650	47	0.92	715	50	1.34	780	52	1.41	817	53	1.63	873	55	1.63
3600	683	51	1.08	745	54	1.57	805	56	1.63	848	57	1.88	898	59	1.84
3800	717	55	1.27	775	57	1.85	830	59	1.87	878	61	2.16	924	63	2.08
4000	751	59	1.49	806	61	2.17	856	63	2.15	909	66	2.48	949	67	2.34
4200	784	63	1.75	836	65	2.54	881	67	2.47	940	70	2.86	974	71	2.64
CFM	1.2			1.4			1.6			1.8			2.0		
	RPM	DDC %	BHP	RPM	DDC %	BHP	RPM	DDC %	BHP	RPM	DDC %	BHP	RPM	DDC %	BHP
1600	762	20	0.85	804	21	0.92	843	24	1.02	877	40	1.10	918	28	1.21
1800	779	24	0.94	821	26	1.02	861	28	1.13	895	44	1.22	935	32	1.34
2000	796	28	1.04	838	30	1.12	878	32	1.25	912	48	1.34	952	36	1.48
2200	814	32	1.15	856	34	1.24	895	36	1.38	930	52	1.48	970	40	1.64
2400	831	36	1.27	873	38	1.37	912	40	1.53	947	57	1.64	987	44	1.81
2600	849	40	1.41	890	42	1.52	929	44	1.69	964	61	1.81	1005	48	2.00
2800	866	44	1.56	908	46	1.68	946	48	1.87	982	65	2.00	1022	52	2.21
3000	883	48	1.72	925	50	1.85	964	52	2.06	999	69	2.21	1039	56	2.44
3200	901	53	1.90	942	55	2.05	981	56	2.28	1016	73	2.45	1057	60	2.70
3400	918	57	2.10	960	59	2.26	998	60	2.52	1034	77	2.70	1074	64	2.98
3600	936	61	2.32	977	63	2.50	1015	65	2.79	1051	81	2.99	1092	69	3.30
3800	953	65	2.57	995	67	2.76	1032	69	3.08	1069	85	3.30	1109	73	3.64
4000	970	69	2.84	1012	71	3.05	1049	73	3.40	1086	89	3.65	1126	77	4.03
4200	988	73	3.14	1029	75	3.37	1067	77	3.76	1103	93	4.03	1144	81	4.45

Shaded area indicates air flow below 2550 SCFM (300 SCFM/ton) that is not recommended for High Stage cooling or heating.
Valid motor operating range for DDC% setting is 20 - 90.

10.0 Ton Models: DRC1203D, DRC1204D & DRC1207D with DDC Controls • Standard Static to 2.4 Hp (0.2 ~ 0.8 Esp) • Down Flow

CFM	0.2			0.4			0.6			0.8			1.0		
	RPM	DDC %	BHP	RPM	DDC %	BHP	RPM	DDC %	BHP	RPM	DDC %	BHP	RPM	DDC %	BHP
2000	397	21	0.30	495	24	0.36	578	23	0.50	642	27	0.75	-	-	-
2200	420	24	0.35	515	27	0.41	596	26	0.55	659	30	0.83	-	-	-
2400	444	28	0.40	535	30	0.46	614	30	0.61	676	34	0.91	-	-	-
2600	467	31	0.46	554	34	0.52	632	33	0.67	693	37	1.01	-	-	-
2800	490	34	0.53	574	37	0.59	650	37	0.74	710	40	1.12	-	-	-
3000	513	37	0.61	594	40	0.66	668	40	0.82	727	44	1.23	-	-	-
3200	537	40	0.70	613	43	0.75	685	44	0.90	744	47	1.36	-	-	-
3400	560	44	0.80	633	46	0.84	703	47	1.00	761	50	1.51	-	-	-
3600	583	47	0.92	653	49	0.95	721	51	1.10	778	53	1.66	-	-	-
3800	606	50	1.06	673	52	1.07	739	54	1.22	795	57	1.84	-	-	-
4000	630	53	1.22	692	55	1.21	757	58	1.35	812	60	2.03	-	-	-
4200	653	56	1.40	712	58	1.36	775	62	1.49	829	63	2.25	-	-	-

Shaded area indicates air flow below 3000 SCFM (300 SCFM/ton) that is not recommended for High Stage cooling or heating.
Valid motor operating range for DDC% setting is 20 - 90.

HORIZONTAL FLOW

CFM	0.2			0.4			0.6			0.8			1.0		
	RPM	DDC %	BHP	RPM	DDC %	BHP	RPM	DDC %	BHP	RPM	DDC %	BHP	RPM	DDC %	BHP
2000	435	23	0.32	521	27	0.39	603	31	0.53	654	33	0.63	-	-	-
2200	464	27	0.37	546	31	0.45	626	35	0.59	675	37	0.71	-	-	-
2400	494	32	0.43	571	35	0.52	648	39	0.67	696	41	0.80	-	-	-
2600	523	36	0.51	596	39	0.60	671	43	0.75	718	45	0.90	-	-	-
2800	552	41	0.60	621	44	0.69	693	47	0.85	739	49	1.01	-	-	-
3000	581	45	0.70	646	48	0.79	715	51	0.96	760	52	1.14	-	-	-
3200	611	50	0.82	671	52	0.91	738	55	1.08	782	56	1.29	-	-	-
3400	640	54	0.97	695	57	1.05	760	59	1.22	803	60	1.45	-	-	-
3600	669	59	1.13	720	61	1.21	782	63	1.37	824	64	1.64	-	-	-
3800	699	63	1.33	745	65	1.39	805	67	1.55	846	68	1.85	-	-	-
4000	728	68	1.56	770	70	1.60	827	72	1.74	867	72	2.08	-	-	-
4200	757	72	1.83	795	74	1.84	850	76	1.97	888	76	2.35	-	-	-

Shaded area indicates air flow below 3000 SCFM (300 SCFM/ton) that is not recommended for High Stage cooling or heating.
Valid motor operating range for DDC% setting is 20 - 90.

10.0 Ton Models: DRC1203L, DRC1204L & DRC1207L with DDC Controls • Medium Static to 3.5 Hp (0.2 ~ 1.4 Esp) • Down Flow

CFM	0.2			0.4			0.6			0.8			1.0		
	RPM	DDC %	BHP	RPM	DDC %	BHP	RPM	DDC %	BHP	RPM	DDC %	BHP	RPM	DDC %	BHP
1800													715	23	0.78
2000	395	21	0.31	497	25	0.37	527	20	0.57	638	23	0.66	729	27	0.86
2200	418	25	0.35	517	28	0.42	551	24	0.64	656	27	0.73	742	30	0.95
2400	442	28	0.40	537	31	0.47	575	28	0.72	673	30	0.80	756	34	1.05
2600	465	31	0.47	557	34	0.53	599	32	0.81	691	34	0.89	770	38	1.16
2800	489	35	0.54	577	37	0.60	623	36	0.92	708	38	0.98	784	41	1.28
3000	512	38	0.62	597	41	0.68	647	39	1.03	726	41	1.08	798	45	1.42
3200	536	41	0.71	617	44	0.77	671	43	1.16	743	45	1.20	812	48	1.56
3400	559	45	0.81	636	47	0.86	695	47	1.31	761	49	1.32	825	52	1.73
3600	583	48	0.94	656	50	0.97	719	51	1.48	778	53	1.46	839	55	1.91
3800	606	51	1.08	676	53	1.10	743	55	1.67	795	56	1.62	853	59	2.11
4000	630	55	1.24	696	57	1.24	767	58	1.88	813	60	1.79	867	63	2.33
4200	653	58	1.43	716	60	1.39	791	62	2.12	830	64	1.97	881	66	2.58
4400	676	61	1.64	736	63	1.57	815	66	2.39	848	68	2.18	895	70	2.85
4600	700	65	1.89	756	66	1.77	839	70	2.70	865	71	2.41	908	73	3.15
4800	723	68	2.17	776	70	2.00	863	74	3.04	883	75	2.66	922	77	3.20
5000	747	71	2.50	796	73	2.25	887	77	3.43	900	79	2.94	936	80	3.30

CFM	1.2			1.4			1.6			1.8			2.0		
	RPM	DDC %	BHP	RPM	DDC %	BHP	RPM	DDC %	BHP	RPM	DDC %	BHP	RPM	DDC %	BHP
1800	767	31	1.10	821	26	0.90	-	-	-	-	-	-	-	-	-
2000	781	34	1.19	834	29	0.97	-	-	-	-	-	-	-	-	-
2200	795	37	1.29	848	33	1.06	-	-	-	-	-	-	-	-	-
2400	808	40	1.40	861	37	1.14	-	-	-	-	-	-	-	-	-
2600	822	43	1.52	875	41	1.24	-	-	-	-	-	-	-	-	-
2800	836	46	1.64	888	44	1.34	-	-	-	-	-	-	-	-	-
3000	850	49	1.78	901	48	1.45	-	-	-	-	-	-	-	-	-
3200	863	53	1.93	915	52	1.57	-	-	-	-	-	-	-	-	-
3400	877	56	2.09	928	55	1.71	-	-	-	-	-	-	-	-	-
3600	891	59	2.26	942	59	1.85	-	-	-	-	-	-	-	-	-
3800	904	62	2.45	955	63	2.00	-	-	-	-	-	-	-	-	-
4000	918	65	2.66	969	67	2.17	-	-	-	-	-	-	-	-	-
4200	932	68	2.88	982	70	2.35	-	-	-	-	-	-	-	-	-
4400	946	71	3.12	995	74	2.54	-	-	-	-	-	-	-	-	-
4600	959	74	3.38	1009	78	2.76	-	-	-	-	-	-	-	-	-
4800	973	77	3.40	1022	81	2.99	-	-	-	-	-	-	-	-	-
5000	987	80	3.45	1036	85	3.23	-	-	-	-	-	-	-	-	-

Shaded area indicates air flow below 3000 SCFM (300 SCFM/ton) that is not recommended for High Stage cooling or heating.
Valid motor operating range for DDC% setting is 20 - 90.

HORIZONTAL FLOW

CFM	0.2			0.4			0.6			0.8			1.0		
	RPM	DDC %	BHP	RPM	DDC %	BHP	RPM	DDC %	BHP	RPM	DDC %	BHP	RPM	DDC %	BHP
1800													736	24	0.80
2000	393	21	0.28	509	25	0.38	582	21	0.66	653	23	0.65	751	27	0.88
2200	419	24	0.32	530	28	0.43	601	24	0.74	672	27	0.72	766	31	0.97
2400	444	27	0.37	550	31	0.48	620	28	0.84	690	31	0.80	780	35	1.08
2600	470	31	0.42	571	34	0.55	639	32	0.94	708	35	0.88	795	38	1.19
2800	495	34	0.48	591	38	0.62	658	36	1.06	727	38	0.97	809	42	1.31
3000	520	38	0.56	612	41	0.69	677	40	1.20	745	42	1.08	824	46	1.45
3200	546	41	0.64	632	44	0.78	697	43	1.35	764	46	1.19	839	49	1.60
3400	571	45	0.74	653	47	0.88	716	47	1.52	782	50	1.31	853	53	1.77
3600	596	48	0.85	674	51	0.99	735	51	1.72	800	54	1.45	868	57	1.96
3800	622	51	0.98	694	54	1.12	754	55	1.75	819	58	1.61	883	60	2.16
4000	647	55	1.12	715	57	1.26	773	59	1.78	837	61	1.77	897	64	2.39
4200	672	58	1.29	735	60	1.43	792	62	1.87	855	65	1.96	912	68	2.64
4400	698	62	1.48	756	64	1.61	811	66	2.11	874	69	2.17	927	71	2.92
4600	723	65	1.71	777	67	1.81	830	70	2.35	892	73	2.40	941	75	3.23
4800	749	68	1.96	797	70	2.04	849	74	2.63	911	77	2.65			
5000	774	72	2.26	818	73	2.30	868	78	2.80	929	80	2.93			

CFM	1.2			1.4			1.6			1.8			2.0		
	RPM	DDC %	BHP	RPM	DDC %	BHP	RPM	DDC %	BHP	RPM	DDC %	BHP	RPM	DDC %	BHP
1800	865	31	1.10	832	27	0.93	-	-	-	-	-	-	-	-	-
2000	873	35	1.19	849	30	1.03	-	-	-	-	-	-	-	-	-
2200	880	38	1.29	867	34	1.13	-	-	-	-	-	-	-	-	-
2400	888	41	1.40	885	38	1.25	-	-	-	-	-	-	-	-	-
2600	896	44	1.52	902	42	1.38	-	-	-	-	-	-	-	-	-
2800	903	47	1.64	920	46	1.53	-	-	-	-	-	-	-	-	-
3000	911	50	1.78	938	50	1.69	-	-	-	-	-	-	-	-	-
3200	918	53	1.93	955	53	1.87	-	-	-	-	-	-	-	-	-
3400	926	57	2.09	973	57	2.06	-	-	-	-	-	-	-	-	-
3600	934	60	2.26	991	61	2.28	-	-	-	-	-	-	-	-	-
3800	941	63	2.45	1009	65	2.52	-	-	-	-	-	-	-	-	-
4000	949	66	2.65	1026	69	2.79	-	-	-	-	-	-	-	-	-
4200	957	69	2.87	1044	72	3.08	-	-	-	-	-	-	-	-	-
4400	964	72	3.11	1062	76	3.40	-	-	-	-	-	-	-	-	-
4600	972	75	3.37				-	-	-	-	-	-	-	-	-
4800							-	-	-	-	-	-	-	-	-
5000							-	-	-	-	-	-	-	-	-

Shaded area indicates air flow below 3000 SCFM (300 SCFM/ton) that is not recommended for High Stage cooling or heating.
Valid motor operating range for DDC% setting is 20 - 90.

10.0 Ton Models: DRC1203W, DRC1204W & DRC1207W with DDC Controls • High Static to 3.5 Hp (0.2 ~ 2.0 Esp) • Down Flow

CFM	0.2			0.4			0.6			0.8			1.0		
	RPM	DDC %	BHP	RPM	DDC %	BHP	RPM	DDC %	BHP	RPM	DDC %	BHP	RPM	DDC %	BHP
1800													704	22	0.77
2000	395	22	0.31	499	24	0.39	559	19	0.53	636	22	0.67	719	26	0.85
2200	418	25	0.35	519	28	0.43	579	23	0.58	654	26	0.74	734	29	0.94
2400	442	28	0.40	539	31	0.49	599	27	0.65	672	30	0.82	749	33	1.03
2600	465	31	0.47	559	34	0.55	619	31	0.71	689	34	0.91	764	37	1.14
2800	489	35	0.54	579	38	0.62	639	35	0.79	707	38	1.00	779	41	1.26
3000	512	38	0.62	599	41	0.70	659	39	0.87	725	41	1.11	794	44	1.40
3200	536	41	0.71	619	44	0.79	679	43	0.96	743	45	1.23	809	48	1.54
3400	559	45	0.81	639	48	0.89	699	47	1.07	761	49	1.35	824	52	1.70
3600	583	48	0.94	659	51	1.01	719	51	1.18	779	53	1.50	839	56	1.88
3800	606	51	1.08	680	54	1.14	738	54	1.30	796	57	1.65	853	59	2.08
4000	630	55	1.24	700	57	1.28	758	58	1.44	814	61	1.83	868	63	2.30
4200	653	58	1.43	720	61	1.44	778	62	1.59	832	65	2.02	883	67	2.54
4400	677	61	1.64	740	64	1.63	798	66	1.76	850	68	2.23	898	70	2.81
4600	701	65	1.89	760	67	1.83	818	70	1.94	868	72	2.47	913	74	2.85
4800	724	68	2.17	780	71	2.07	838	74	2.15	885	76	2.73	928	78	2.91
5000	748	71	2.50	800	74	2.33	858	78	2.37	903	80	3.02	943	82	3.10
CFM	**1.2**			**1.4**			**1.6**			**1.8**			**2.0**		
	RPM	DDC %	BHP	RPM	DDC %	BHP	RPM	DDC %	BHP	RPM	DDC %	BHP	RPM	DDC %	BHP
1800	759	20	0.74	837	22	0.87	834	36	1.49	826	42	1.63	857	45	1.80
2000	774	24	0.80	849	26	0.94	850	39	1.58	847	45	1.70	879	48	1.87
2200	788	28	0.87	861	30	1.02	866	42	1.68	868	48	1.77	900	50	1.95
2400	803	32	0.94	873	34	1.11	882	45	1.78	889	50	1.84	922	53	2.03
2600	818	36	1.02	885	38	1.20	898	48	1.89	910	53	1.92	943	55	2.11
2800	832	40	1.11	897	42	1.30	914	51	2.01	931	55	1.99	965	58	2.19
3000	847	44	1.20	909	46	1.41	931	54	2.13	952	58	2.08	987	60	2.28
3200	862	48	1.30	921	51	1.52	947	57	2.26	972	61	2.16	1008	63	2.38
3400	876	52	1.41	933	55	1.65	963	60	2.40	993	63	2.25	1030	65	2.47
3600	891	57	1.52	945	59	1.79	979	63	2.55	1014	66	2.34	1052	68	2.57
3800	905	61	1.65	957	63	1.94	995	66	2.71	1035	68	2.44	1073	70	2.68
4000	920	65	1.79	969	67	2.10	1011	69	2.88	1056	71	2.54	1095	73	2.79
4200	935	69	1.94	981	71	2.27	1027	72	3.06	1077	74	2.64	1116	75	2.90
4400	949	73	2.10	993	75	2.46	1043	75	3.08	1098	76	2.75	1138	78	3.02
4600	964	77	2.27	1005	79	2.67	1059	78	3.10	1119	79	2.86	1160	80	3.14
4800	979	81	2.46	1017	83	2.89	1075	81	3.11	1139	82	2.98	1181	83	3.27
5000	993	85	2.67	1029	87	3.13	1091	84	3.12	1160	84	3.10	1203	85	3.41

Shaded area indicates air flow below 3000 SCFM (300 SCFM/ton) that is not recommended for High Stage cooling or heating.
Valid motor operating range for DDC% setting is 20 - 90.

HORIZONTAL FLOW

CFM	0.2			0.4			0.6			0.8			1.0		
	RPM	DDC %	BHP	RPM	DDC %	BHP	RPM	DDC %	BHP	RPM	DDC %	BHP	RPM	DDC %	BHP
1800	370	17	0.27	490	21	0.35	574	16	0.53	629	18	0.61	707	22	0.75
2000	395	21	0.31	510	25	0.39	592	20	0.59	648	22	0.67	725	26	0.83
2200	420	24	0.35	531	28	0.45	610	24	0.65	667	26	0.75	744	30	0.92
2400	446	28	0.40	552	31	0.50	629	28	0.72	687	30	0.82	762	34	1.01
2600	471	31	0.47	573	35	0.57	647	32	0.79	706	34	0.91	781	38	1.12
2800	496	35	0.54	594	38	0.64	665	35	0.88	725	38	1.01	799	41	1.24
3000	521	38	0.62	615	41	0.72	684	39	0.97	745	42	1.11	818	45	1.37
3200	546	42	0.71	635	45	0.81	702	43	1.07	764	46	1.23	836	49	1.51
3400	571	45	0.81	656	48	0.91	720	47	1.18	783	50	1.36	855	53	1.67
3600	596	49	0.94	677	51	1.03	739	51	1.31	802	54	1.50	873	57	1.85
3800	622	52	1.08	698	55	1.16	757	55	1.44	822	58	1.66	892	61	2.04
4000	647	56	1.24	719	58	1.31	775	59	1.59	841	62	1.83	910	64	2.26
4200	672	59	1.43	740	61	1.48	794	62	1.76	860	66	2.03	929	68	2.49
4400	697	63	1.64	760	65	1.67	812	66	1.95	880	70	2.24	947	72	2.75
4600	722	66	1.89	781	68	1.88	830	70	2.15	899	74	2.47	966	76	3.04
4800	747	70	2.17	802	71	2.12	849	74	2.38	918	77	2.73	984	80	3.36
5000	773	73	2.50	823	75	2.39	867	78	2.63	937	81	3.02	1003	83	3.40

CFM	1.2			1.4			1.6			1.8			2.0		
	RPM	DDC %	BHP	RPM	DDC %	BHP	RPM	DDC %	BHP	RPM	DDC %	BHP	RPM	DDC %	BHP
1800	581	25	0.95	827	29	1.15	806	38	1.57	924	43	1.92	905	44	1.96
2000	613	28	1.03	844	33	1.25	828	41	1.67	940	46	2.03	926	47	2.08
2200	645	32	1.12	860	36	1.35	851	44	1.77	955	48	2.16	948	50	2.21
2400	677	36	1.21	877	40	1.47	873	47	1.88	971	51	2.29	970	52	2.35
2600	709	40	1.31	894	44	1.59	895	50	2.00	987	54	2.44	991	55	2.49
2800	741	44	1.42	910	47	1.72	917	53	2.12	1002	56	2.59	1013	58	2.65
3000	773	47	1.54	927	51	1.86	940	56	2.26	1018	59	2.75	1034	61	2.81
3200	805	51	1.67	944	55	2.02	962	59	2.39	1033	62	2.92	1056	63	2.99
3400	837	55	1.81	960	58	2.19	984	62	2.54	1049	65	3.10	1077	66	3.17
3600	869	59	1.96	977	62	2.37	1006	65	2.70	1065	67	3.29	1099	69	3.37
3800	901	63	2.12	994	66	2.57	1029	68	2.87	1080	70	3.49	1121	72	3.57
4000	933	66	2.30	1011	69	2.78	1051	71	3.04						
4200	965	70	2.49	1027	73	3.01	1073	74	3.23						
4400	997	74	2.70	1044	77	3.26	1096	77	3.43						
4600	1029	78	2.92	1061	80	3.53									
4800	1060	82	3.17												
5000	1092	85	3.43												

Shaded area indicates air flow below 3000 SCFM (300 SCFM/ton) that is not recommended for High Stage cooling or heating.
Valid motor operating range for DDC% setting is 20 - 90.

12.5 Ton Models: DRC1503D, DRC1504D & DRC1507D with DDC Controls • Standard Static to 3.5 Hp (0.2 ~ 0.8 Esp) • Down Flow

CFM	0.2			0.4			0.6			0.8			1.0		
	RPM	DDC %	BHP	RPM	DDC %	BHP	RPM	DDC %	BHP	RPM	DDC %	BHP	RPM	DDC %	BHP
2000							674	20	0.61	785	27	0.85	-	-	-
2200							682	23	0.66	790	30	0.92	-	-	-
2400	448	18	0.34	569	20	0.54	690	26	0.72	795	33	1.00	-	-	-
2600	463	22	0.39	580	24	0.60	698	30	0.78	800	36	1.08	-	-	-
2800	478	25	0.44	592	28	0.66	706	33	0.84	806	39	1.17	-	-	-
3000	493	29	0.49	603	31	0.73	714	37	0.91	811	42	1.27	-	-	-
3200	508	32	0.56	615	35	0.80	722	40	0.99	816	45	1.38	-	-	-
3400	523	36	0.63	626	38	0.89	730	43	1.07	821	48	1.49	-	-	-
3600	539	39	0.71	638	42	0.98	738	47	1.16	826	51	1.62	-	-	-
3800	554	43	0.80	649	46	1.09	746	50	1.25	832	54	1.75	-	-	-
4000	569	46	0.90	661	49	1.20	754	54	1.36	837	58	1.90	-	-	-
4200	584	50	1.01	672	53	1.33	762	57	1.47	842	61	2.06	-	-	-
4400	599	53	1.14	684	56	1.47	770	60	1.59	847	64	2.23	-	-	-
4600	614	57	1.29	695	60	1.62	778	64	1.73	852	67	2.41	-	-	-
4800	629	60	1.45	706	64	1.79	786	67	1.87	857	70	2.61	-	-	-

Shaded area indicates air flow below 3750 SCFM (300 SCFM/ton) that is not recommended for High Stage cooling or heating.
Valid motor operating range for DDC% setting is 20 - 90.

HORIZONTAL FLOW

CFM	0.2			0.4			0.6			0.8			1.0		
	RPM	DDC %	BHP	RPM	DDC %	BHP	RPM	DDC %	BHP	RPM	DDC %	BHP	RPM	DDC %	BHP
2000										711	25	0.79	-	-	-
2200				615	22	0.71	615	22	0.54	725	29	0.88	-	-	-
2400	484	22	0.37	634	26	0.78	634	26	0.60	738	32	0.97	-	-	-
2600	507	26	0.41	653	29	0.87	653	29	0.66	752	35	1.07	-	-	-
2800	529	29	0.47	672	33	0.96	672	33	0.73	766	39	1.18	-	-	-
3000	551	33	0.53	691	37	1.06	691	37	0.80	779	42	1.31	-	-	-
3200	573	36	0.59	710	41	1.17	710	41	0.89	793	45	1.45	-	-	-
3400	596	40	0.67	729	44	1.29	729	44	0.98	806	49	1.60	-	-	-
3600	618	44	0.76	748	48	1.43	748	48	1.09	820	52	1.77	-	-	-
3800	640	47	0.85	767	52	1.58	767	52	1.20	833	55	1.95	-	-	-
4000	663	51	0.96	786	56	1.74	786	56	1.33	847	59	2.16	-	-	-
4200	685	54	1.08	806	59	1.93	806	59	1.47	861	62	2.38	-	-	-
4400	707	58	1.22	825	63	2.13	825	63	1.62	874	65	2.63	-	-	-
4600	729	62	1.38	844	67	2.35	844	67	1.79	888	69	2.91	-	-	-
4800	752	65	1.55	863	71	2.60	863	71	1.98	901	72	3.22	-	-	-

Shaded area indicates air flow below 3750 SCFM (300 SCFM/ton) that is not recommended for High Stage cooling or heating.
Valid motor operating range for DDC% setting is 20 - 90.

12.5 Ton Models: DRC1503L, DRC1504L & DRC1507L with DDC Controls • Medium Static to 3.5 Hp (0.2 ~ 1.4 Esp) • Down Flow

CFM	0.2			0.4			0.6			0.8			1.0		
	RPM	DDC %	BHP	RPM	DDC %	BHP	RPM	DDC %	BHP	RPM	DDC %	BHP	RPM	DDC %	BHP
2200													834	27	1.01
2400										772	22	0.93	843	30	1.09
2600							694	23	0.85	779	26	1.00	851	34	1.19
2800	484	25	0.48	591	21	0.62	702	27	0.92	787	30	1.09	859	38	1.28
3000	499	28	0.54	603	25	0.67	711	31	0.99	795	35	1.18	867	42	1.39
3200	513	32	0.61	614	29	0.73	719	35	1.08	802	39	1.28	876	46	1.51
3400	527	35	0.69	625	34	0.79	727	39	1.17	810	43	1.38	884	49	1.63
3600	541	39	0.78	636	38	0.86	736	43	1.26	818	47	1.50	892	53	1.77
3800	556	43	0.88	648	42	0.93	744	47	1.37	825	51	1.62	900	57	1.92
4000	570	46	0.99	659	47	1.00	753	51	1.48	833	56	1.76	909	61	2.08
4200	584	50	1.11	670	51	1.09	761	56	1.61	841	60	1.90	917	65	2.25
4400	599	53	1.26	682	55	1.18	769	60	1.74	849	64	2.06	925	69	2.44
4600	613	57	1.42	693	59	1.28	778	64	1.88	856	68	2.23	934	72	2.64
4800	627	61	1.60	704	64	1.38	786	68	2.04	864	72	2.42	942	76	2.86
5000	641	64	1.80	716	68	1.50	795	72	2.21	872	77	2.62	950	80	3.10

CFM	1.2			1.4			1.6			1.8			2.0		
	RPM	DDC %	BHP	RPM	DDC %	BHP	RPM	DDC %	BHP	RPM	DDC %	BHP	RPM	DDC %	BHP
2200	880	38	1.50	1173	28	1.77	-	-	-	-	-	-	-	-	-
2400	891	41	1.59	1179	32	1.88	-	-	-	-	-	-	-	-	-
2600	902	44	1.69	1184	35	2.00	-	-	-	-	-	-	-	-	-
2800	913	48	1.79	1189	38	2.12	-	-	-	-	-	-	-	-	-
3000	923	51	1.91	1195	41	2.26	-	-	-	-	-	-	-	-	-
3200	934	54	2.02	1200	44	2.39	-	-	-	-	-	-	-	-	-
3400	945	57	2.15	1206	48	2.54	-	-	-	-	-	-	-	-	-
3600	956	60	2.28	1211	51	2.70	-	-	-	-	-	-	-	-	-
3800	966	63	2.42	1217	54	2.87	-	-	-	-	-	-	-	-	-
4000	977	66	2.57	1222	57	3.04	-	-	-	-	-	-	-	-	-
4200	988	69	2.73	1227	60	3.23	-	-	-	-	-	-	-	-	-
4400	999	72	2.90	1233	63	3.43	-	-	-	-	-	-	-	-	-
4600	1009	75	3.08	1238	67	3.64	-	-	-	-	-	-	-	-	-
4800	1020	79	3.27				-	-	-	-	-	-	-	-	-
5000							-	-	-	-	-	-	-	-	-

Shaded area indicates air flow below 3750 SCFM (300 SCFM/ton) that is not recommended for High Stage cooling or heating.
Valid motor operating range for DDC% setting is 20 - 90.

HORIZONTAL FLOW

CFM	0.2			0.4			0.6			0.8			1.0		
	RPM	DDC %	BHP	RPM	DDC %	BHP	RPM	DDC %	BHP	RPM	DDC %	BHP	RPM	DDC %	BHP
2200													731	26	0.95
2400										707	22	0.93	749	30	1.05
2600							669	22	0.83	725	26	1.02	767	34	1.16
2800	536	28	0.58	597	22	0.65	686	27	0.92	742	31	1.13	786	38	1.28
3000	557	32	0.65	619	27	0.72	704	31	1.01	759	35	1.25	804	42	1.42
3200	578	36	0.74	641	32	0.80	721	36	1.12	776	40	1.38	822	45	1.57
3400	599	40	0.83	663	36	0.88	739	41	1.24	793	44	1.53	841	49	1.73
3600	620	44	0.93	685	41	0.97	756	45	1.37	810	48	1.69	859	53	1.91
3800	641	47	1.05	707	46	1.08	774	50	1.51	828	53	1.86	877	57	2.11
4000	662	51	1.19	728	51	1.19	791	54	1.67	845	57	2.06	896	61	2.34
4200	683	55	1.34	750	55	1.31	808	59	1.84	862	62	2.28	914	65	2.58
4400	704	59	1.51	772	60	1.45	826	63	2.04	879	66	2.52	932	69	2.85
4600	725	63	1.70	794	65	1.60	843	68	2.25	896	70	2.78	950	73	3.01
4800	747	66	1.92	816	70	1.77	861	72	2.49	913	75	3.07	969	77	3.12
5000	768	70	2.17	838	75	1.96	878	77	2.75	931	79	3.40	987	81	3.32
CFM	**1.2**			**1.4**			**1.6**			**1.8**			**2.0**		
	RPM	DDC %	BHP	RPM	DDC %	BHP	RPM	DDC %	BHP	RPM	DDC %	BHP	RPM	DDC %	BHP
2200	799	29	0.90	867	32	1.10	-	-	-	-	-	-	-	-	-
2400	814	33	0.97	880	36	1.19	-	-	-	-	-	-	-	-	-
2600	829	37	1.05	894	40	1.29	-	-	-	-	-	-	-	-	-
2800	844	40	1.14	907	44	1.40	-	-	-	-	-	-	-	-	-
3000	859	44	1.23	920	47	1.51	-	-	-	-	-	-	-	-	-
3200	874	48	1.34	934	51	1.64	-	-	-	-	-	-	-	-	-
3400	889	52	1.45	947	55	1.78	-	-	-	-	-	-	-	-	-
3600	904	56	1.57	960	58	1.92	-	-	-	-	-	-	-	-	-
3800	919	60	1.70	974	62	2.08	-	-	-	-	-	-	-	-	-
4000	934	63	1.84	987	66	2.26	-	-	-	-	-	-	-	-	-
4200	949	67	1.99	1000	69	2.45	-	-	-	-	-	-	-	-	-
4400	964	71	2.16	1013	73	2.65	-	-	-	-	-	-	-	-	-
4600	979	75	2.90	1027	77	3.03	-	-	-	-	-	-	-	-	-
4800	994	79	3.13	1040	81	3.11	-	-	-	-	-	-	-	-	-
5000	1009	83	3.30	1053	84	3.37	-	-	-	-	-	-	-	-	-

Shaded area indicates air flow below 3750 SCFM (300 SCFM/ton) that is not recommended for High Stage cooling or heating.
Valid motor operating range for DDC% setting is 20 - 90.

12.5 Ton Models: DRC1503W, DRC1504W & DRC1507W with DDC Controls • High Static to 3.5 Hp (0.2 ~ 2.0 Esp) • Down Flow

CFM	0.2			0.4			0.6			0.8			1.0		
	RPM	DDC %	BHP	RPM	DDC %	BHP	RPM	DDC %	BHP	RPM	DDC %	BHP	RPM	DDC %	BHP
2400															
2600													796	22	0.94
2800										751	20	1.04	819	27	1.04
3000							698	22	0.97	778	25	1.17	841	32	1.15
3200	625	36	0.84	657	23	0.86	726	27	1.09	806	31	1.32	864	37	1.27
3400	654	40	0.96	687	29	0.97	755	33	1.23	833	37	1.49	886	42	1.40
3600	683	44	1.10	717	35	1.09	783	39	1.38	860	42	1.68	908	47	1.55
3800	712	48	1.27	748	41	1.23	811	44	1.56	887	48	1.89	931	52	1.71
4000	741	52	1.46	778	47	1.39	839	50	1.76	914	54	2.13	953	57	1.90
4200	770	57	1.68	809	52	1.56	867	56	1.98	941	59	2.40	976	62	2.09
4400	799	61	1.93	839	58	1.76	895	61	2.24	968	65	2.71	998	67	2.31
4600	828	65	2.22	869	64	1.99	923	67	2.52	996	71	3.06	1021	73	2.56
4800	857	69	2.56	900	70	2.24	952	73	2.84	1023	76	3.45	1043	78	2.83
5000	886	74	2.94	930	75	2.52	980	78	3.21	1050	82	3.89	1066	83	3.12
5200	915	78	3.39	961	81	2.85	1008	84	3.62	1077	88	4.38	1088	88	3.45
5400	944	82	3.90	991	87	3.21	1036	89	4.08	1104	93	4.94	1111	93	3.82
5600	973	86	4.48	1021	93	3.62	1064	95	4.60	1131	99	5.57	1133	98	4.22

CFM	1.2			1.4			1.6			1.8			2.0		
	RPM	DDC %	BHP	RPM	DDC %	BHP	RPM	DDC %	BHP	RPM	DDC %	BHP	RPM	DDC %	BHP
2400	1010	27	1.13	1011	34	1.59	1060	37	1.82	1107	39	1.82	1127	44	2.11
2600	1027	31	1.22	1021	38	1.72	1069	41	1.97	1116	43	1.93	1138	48	2.29
2800	1044	36	1.33	1031	42	1.86	1079	45	2.13	1126	47	2.05	1149	52	2.48
3000	1061	40	1.44	1041	46	2.02	1088	49	2.31	1136	51	2.18	1161	56	2.69
3200	1077	45	1.56	1052	50	2.19	1098	53	2.50	1146	55	2.31	1172	60	2.91
3400	1094	49	1.69	1062	54	2.37	1107	57	2.71	1155	59	2.45	1184	63	3.15
3600	1111	53	1.83	1072	58	2.57	1117	61	2.94	1165	63	2.61	1195	67	3.41
3800	1128	58	1.98	1082	62	2.78	1126	65	3.18	1175	67	2.77	1206	71	3.70
4000	1145	62	2.14	1092	66	3.01	1136	69	3.45	1184	71	2.94	1218	75	4.01
4200	1161	67	2.32	1102	70	3.26	1145	73	3.73	1194	75	3.12	1229	79	4.34
4400	1178	71	2.51	1112	75	3.53	1155	77	4.05	1204	79	3.31	1241	83	4.70
4600	1195	76	2.72	1122	79	3.83	1164	81	4.38	1213	83	3.52	1252	87	5.09
4800	1212	80	2.95	1132	83	4.15	1173	85	4.75	1223	87	3.74			
5000	1229	85	3.20	1142	87	4.49	1183	89	5.14	1233	91	3.97			
5200	1246	89	3.46	1153	91	4.87	1192	93	5.57	1243	95	4.21			
5400	1262	94	3.75												
5600	1279	98	4.06												

Shaded area indicates air flow below 3750 SCFM (300 SCFM/ton) that is not recommended for High Stage cooling or heating.
Valid motor operating range for DDC% setting is 20 - 90.

DDC Airflow

HORIZONTAL FLOW

CFM	0.2			0.4			0.6			0.8			1.0		
	RPM	DDC %	BHP	RPM	DDC %	BHP	RPM	DDC %	BHP	RPM	DDC %	BHP	RPM	DDC %	BHP
2400															
2600													797	23	1.08
2800										741	21	0.96	813	28	1.19
3000	563	31	0.56	628	21	0.97	686	24	0.88	761	26	1.06	830	33	1.32
3200	588	35	0.63	650	26	1.10	707	30	0.97	780	32	1.17	846	38	1.46
3400	613	39	0.71	673	31	1.24	729	35	1.07	800	37	1.29	862	42	1.61
3600	637	44	0.80	695	37	1.40	750	40	1.19	819	42	1.43	879	47	1.78
3800	662	48	0.90	718	42	1.57	772	45	1.31	839	48	1.58	895	52	1.97
4000	687	52	1.02	740	47	1.77	794	50	1.45	858	53	1.75	911	57	2.17
4200	712	56	1.15	763	52	2.00	815	56	1.60	878	58	1.93	927	61	2.40
4400	736	60	1.30	786	58	2.25	837	61	1.77	897	64	2.13	944	66	2.66
4600	761	64	1.46	808	63	2.54	858	66	1.96	916	69	2.36	960	71	2.93
4800	786	68	1.65	831	68	2.87	880	71	2.16	936	74	2.60	976	76	3.24
5000	811	72	1.86	853	73	3.23	901	77	2.39	955	79	2.88	992	81	3.58
5200	836	76	2.09	876	79	3.64	923	82	2.64	975	85	3.18	1009	85	3.96
5400	860	81	2.36	898	84	4.11	944	87	2.92	994	90	3.51	1025	90	4.38
5600	885	85	2.66	921	89	4.63	966	92	3.22	1014	95	3.88	1041	95	4.84
CFM	1.2			1.4			1.6			1.8			2.0		
	RPM	DDC %	BHP	RPM	DDC %	BHP	RPM	DDC %	BHP	RPM	DDC %	BHP	RPM	DDC %	BHP
2400	842	21	1.13	909	24	1.31	1012	31	1.45	1082	40	2.03	1118	26	2.21
2600	857	26	1.24	923	29	1.45	1022	36	1.57	1089	43	2.20	1125	29	2.34
2800	872	31	1.37	937	34	1.60	1031	40	1.70	1096	47	2.38	1132	32	2.49
3000	888	36	1.52	951	39	1.77	1041	44	1.85	1103	51	2.58	1140	35	2.64
3200	903	40	1.68	965	43	1.96	1051	49	2.00	1110	55	2.79	1147	38	2.81
3400	918	45	1.86	979	48	2.16	1061	53	2.17	1117	59	3.03	1154	41	2.98
3600	934	50	2.05	993	53	2.39	1071	57	2.35	1124	63	3.28	1162	45	3.17
3800	949	55	2.27	1007	57	2.64	1080	62	2.54	1131	66	3.55	1169	48	3.36
4000	965	59	2.50	1020	62	2.92	1090	66	2.76	1138	70	3.85	1176	51	3.57
4200	980	64	2.77	1034	67	3.23	1100	70	2.98	1145	74	4.17	1184	54	3.79
4400	995	69	3.06	1048	72	3.57	1110	75	3.23	1152	78	4.52	1191	57	4.02
4600	1011	74	3.38	1062	76	3.94	1120	79	3.50	1159	82	4.89	1198	60	4.27
4800	1026	78	3.74	1076	81	4.36	1130	84	3.79						
5000	1041	83	4.13	1090	86	4.82	1139	88	4.11						
5200	1057	88	4.56	1104	90	5.32	1149	92	4.45						
5400	1072	93	5.04												
5600															

Shaded area indicates air flow below 3750 SCFM (300 SCFM/ton) that is not recommended for High Stage cooling or heating.
Valid motor operating range for DDC% setting is 20 - 90.

Static Pressure

7.5-12.5 TONS		
DOWNFLOW ECONOMIZER PRESSURE DROP		
Cabinet	CFM	SP in.wg.
7.5 Ton	2250	.04"
	3000	.07"
	3750	.11"
8.5 Ton	2550	.06"
	3400	.10"
	4250	.16"
10 Ton	3000	.08"
	4000	.13"
	5000	.22"
12.5 Ton	3750	.14"
	5000	.24"
	6250	.36"

7.5-12.5 TONS		
HORIZONTAL ECONOMIZER PRESSURE DROP		
Cabinet	CFM	SP in.wg.
7.5 Ton	2250	.05"
	3000	.07"
	3750	.13"
8.5 Ton	2550	.07"
	3400	.13"
	4250	.18"
10 Ton	3000	.07"
	4000	.12"
	5000	.19"
12.5 Ton	3750	.09"
	5000	.15"
	6250	.24"

DRC 090 (7.5 Tons) With iLINQ Control In Modulating Hot Gas Reheat Mode-High Stage

EAT (DB °F)			75			75			75			75		
EAT (WB °F)			62			64			68			71		
Ambient Temperature (DB °F)		SCFM	2000	3000	3375	2000	3000	3375	2000	3000	3375	2000	3000	3375
95	TC	Btu/h	41,100	46,100	46,100	45,700	50,700	52,500	63,569	72,802	77,118	83,202	95,162	108,031
	S/T	-	0.63	0.79	0.85	0.51	0.66	0.70	0.35	0.39	0.41	0.30	0.30	0.29
	CMPR	kW	5.5	5.5	5.5	5.5	5.6	5.6	5.6	5.6	5.7	5.8	5.9	5.9
	LDB	°F	63.23	63.96	64.45	64.41	64.86	65.1	64.89	66.40	66.48	63.65	66.35	66.56
	LWB	°F	55.59	57.4	57.99	56.53	58.57	59.02	58.30	60.8	61.22	58.83	62.0	61.94
80	TC	Btu/h	46,800	51,800	51,600	51,400	56,400	58,000	66,989	76,038	78,230	84,256	99,845	102,545
	S/T	-	0.61	0.75	0.81	0.51	0.64	0.68	0.39	0.49	0.44	0.35	0.43	0.40
	CMPR	kW	4.7	4.7	4.7	4.7	4.7	4.7	4.7	4.7	4.7	4.7	4.8	4.9
	LDB	°F	62.02	63.23	63.74	63.08	64.06	64.38	63.12	63.71	65.73	61.60	61.99	63.95
	LWB	°F	54.55	56.74	57.43	55.51	57.92	58.47	57.70	60.40	61.11	58.63	61.50	62.41
75	TC	Btu/h	48,700	53,700	53,500	53,300	58,300	59,900	67,929	75,964	78,697	82,566	93,345	99,496
	S/T	-	0.61	0.74	0.80	0.51	0.64	0.67	0.37	0.45	0.45	0.35	0.44	0.42
	CMPR	kW	4.6	4.6	4.6	4.6	4.6	4.6	4.6	4.6	4.6	4.6	4.6	4.7
	LDB	°F	61.5	62.96	63.47	62.64	63.69	64.19	63.6	64.64	65.46	61.9	62.55	63.74
	LWB	°F	54.2	56.52	57.23	55.17	57.7	58.28	57.55	60.42	61.07	58.92	62.18	62.69
70	TC	Btu/h	50,600	55,600	55,300	55,200	60,200	61,700	69,124	76,655	79,899	82,052	90,760	100,132
	S/T	-	0.60	0.73	0.79	0.51	0.63	0.67	0.39	0.50	0.46	0.35	0.47	0.42
	CMPR	kW	4.5	4.5	4.5	4.5	4.5	4.5	4.5	4.5	4.5	4.5	4.6	4.6
	LDB	°F	61.20	62.70	63.23	62.20	63.51	63.86	62.75	63.39	65.10	61.95	62.07	63.67
	LWB	°F	53.84	56.29	57.05	54.82	57.49	58.10	57.33	60.33	60.95	59.00	62.44	62.63
65	TC	Btu/h	52,497	57,497	57,185	57,112	62,112	63,550	70,734	78,681	82,121	83,691	96,543	104,200
	S/T	-	0.60	0.72	0.78	0.50	0.63	0.66	0.39	0.47	0.44	0.37	0.45	0.40
	CMPR	kW	4.3	4.3	4.3	4.3	4.3	4.3	4.3	4.4	4.4	4.3	4.5	4.7
	LDB	°F	60.68	62.46	62.99	62.02	63.14	63.70	62.46	63.79	65.27	60.92	61.84	63.77
	LWB	°F	53.49	56.07	56.85	54.48	57.27	57.91	57.05	60.12	60.74	58.72	61.84	62.26

DRC 090 (7.5 Tons) With iLINQ Control In Modulating Hot Gas Reheat Mode-Low Stage

EAT (DB °F)			75			75			75			75		
EAT (WB °F)			62			64			68			71		
Ambient Temperature (DB °F)		SCFM	2000	3000	3375	2000	3000	3375	2000	3000	3375	2000	3000	3375
60	TC	Btu/h	6,600	7,900	7,600	6,500	7,800	6,500	7,832	10,061	7,204	9,463	13,294	9,510
	S/T	-	0.62	0.78	0.79	0.30	0.51	0.45	0.008	0.157	0.033	0.003	0.035	0.008
	CMPR	kW	2.1	2.1	2.1	2.2	2.1	2.1	2.2	2.1	2.1	2.2	2.1	2.1
	LDB	°F	73.14	73.13	73.38	74.11	73.79	74.21	74.96	74.51	74.94	75.00	74.88	74.97
	LWB	°F	61.45	61.66	61.79	63.01	63.21	63.42	66.92	67.07	67.42	69.78	69.86	70.28
50	TC	Btu/h	9,100	10,300	10,700	9,000	10,300	9,600	10,500	12,661	11,905	11,916	15,671	13,463
	S/T	-	0.62	0.75	0.75	0.39	0.54	0.52	0.126	0.210	0.162	0.057	0.065	0.041
	CMPR	kW	2.1	2.0	2.1	2.1	2.1	2.1	2.1	2.1	2.1	2.1	2.1	2.1
	LDB	°F	72.44	72.66	72.84	73.4	73.31	73.66	74.38	74.19	74.49	74.68	74.67	74.85
	LWB	°F	61.05	61.41	61.49	62.62	62.95	63.13	66.54	66.8	67.03	69.46	69.7	69.98
40	TC	Btu/h	11,500	12,800	13,900	11,500	12,700	12,800	13,049	15,101	15,016	14,063	17,368	16,919
	S/T	-	0.63	0.73	0.73	0.44	0.56	0.55	0.20	0.249	0.219	0.091	0.079	0.049
	CMPR	kW	2.1	2.0	2.0	2.1	2.0	2.0	2.1	2.0	2.0	2.1	2.1	2.0
	LDB	°F	71.71	72.17	72.27	72.7	72.84	73.1	73.81	73.86	74.11	74.42	74.58	74.77
	LWB	°F	60.66	61.14	61.19	62.23	62.7	62.84	66.18	66.60	66.76	69.17	69.50	69.71

TC: Total Capacity (Btu/h); S/T: Sensible to Total Capacity Ratio; CMPR: Compressor Power (kW); LDB: Leaving Dry Bulb Temperature (°F); LWB: Leaving Wet Bulb Temperature (°F)

DRC 102 (8.5 Tons) With iLINQ Control In Modulating Hot Gas Reheat Mode-High Stage

EAT (DB °F)			75			75			75			75		
EAT (WB °F)			62			64			68			71		
Ambient Temperature (DB °F)		SCFM	2000	3000	4000	2000	3000	4000	2000	3000	4000	2000	3000	4000
95	TC	Btu/h	31,200	31,100	33,000	37,200	39,300	40,400	54,170	61,639	62,269	70,900	80,570	87,230
	S/T	-	0.48	0.81	0.96	0.34	0.59	0.71	0.21	0.31	0.38	0.18	0.24	0.28
	CMPR	kW	6.1	6.2	6.2	6.1	6.2	6.2	6.2	6.2	6.2	6.4	6.4	6.5
	LDB	°F	68.19	67.37	67.80	69.25	67.97	68.48	69.83	69.21	69.62	69.20	69.14	69.45
	LWB	°F	57.36	59.12	59.82	58.04	59.85	60.83	59.90	61.97	63.50	60.88	63.54	65.03
80	TC	Btu/h	46,600	49,200	53,800	52,600	57,400	61,200	69,822	81,182	83,231	87,820	106,600	109,100
	S/T	-	0.49	0.67	0.79	0.39	0.54	0.64	0.29	0.39	0.41	0.26	0.35	0.37
	CMPR	kW	5.2	5.2	5.2	5.2	5.2	5.2	5.2	5.2	5.2	5.2	5.3	5.4
	LDB	°F	64.62	65.01	65.34	65.68	65.61	66.1	65.80	65.4	67.2	64.62	63.7	65.8
	LWB	°F	54.61	57.06	58.07	55.32	57.82	59.11	57.24	59.86	61.87	58.06	60.80	63.38
75	TC	Btu/h	51,700	55,300	60,700	57,700	63,500	68,100	74,538	86,019	89,695	90,600	105,700	113,400
	S/T	-	0.49	0.65	0.75	0.40	0.53	0.63	0.29	0.36	0.42	0.27	0.35	0.39
	CMPR	kW	5.0	5.0	5.0	5.0	5.0	5.0	5.0	5.0	5.0	5.0	5.1	5.1
	LDB	°F	63.49	64.11	64.65	64.51	64.8	65.25	65.17	65.62	66.44	63.88	63.79	64.95
	LWB	°F	53.66	56.34	57.48	54.39	57.12	58.53	56.42	59.34	61.36	57.58	60.90	63.04
70	TC	Btu/h	56,900	61,300	67,600	62,800	69,500	75,000	79,409	91,469	96,789	94,260	108,300	121,300
	S/T	-	0.49	0.63	0.73	0.41	0.52	0.62	0.32	0.40	0.42	0.29	0.38	0.39
	CMPR	kW	4.8	4.8	4.8	4.8	4.8	4.8	4.8	4.8	4.9	4.8	4.9	4.9
	LDB	°F	62.33	63.30	63.78	63.30	64.05	64.43	63.45	63.91	65.76	62.57	62.53	64.25
	LWB	°F	52.68	55.63	56.87	53.44	56.42	57.94	55.54	58.72	60.79	56.94	60.61	62.44
65	TC	Btu/h	61,991	67,390	74,566	67,973	75,583	81,951	84,676	98,402	105,050	100,186	119,373	135,857
	S/T	-	0.49	0.61	0.71	0.42	0.51	0.61	0.33	0.38	0.40	0.31	0.36	0.37
	CMPR	kW	4.6	4.6	4.6	4.6	4.6	4.6	4.6	4.6	4.6	4.5	4.8	5.0
	LDB	°F	61.19	62.54	62.97	62.02	63.32	63.64	62.30	63.67	65.45	60.88	61.98	63.58
	LWB	°F	51.69	54.89	56.26	52.45	55.70	57.34	54.58	57.94	60.12	55.89	59.41	61.30

DRC 102 (8.5 Tons) With iLINQ Control In Modulating Hot Gas Reheat Mode-Low Stage

EAT (DB °F)			75			75			75			75		
EAT (WB °F)			62			64			68			71		
Ambient Temperature (DB °F)		SCFM	2000	3000	4000	2000	3000	4000	2000	3000	4000	2000	3000	4000
60	TC	Btu/h	21,600	15,000	7,900	24,800	18,300	10,800	33,353	27,359	20,355	39,670	36,150	34,810
	S/T	-	0.64	0.77	0.89	0.51	0.57	0.54	0.27	0.25	0.20	0.10	0.06	0.05
	CMPR	kW	2.4	2.4	2.4	2.4	2.4	2.4	2.4	2.4	2.4	2.4	2.4	2.4
	LDB	°F	68.72	71.5	73.4	69.25	71.84	73.67	70.91	72.93	74.07	73.16	74.4	74.62
	LWB	°F	58.99	60.9	61.87	60.09	62.12	63.18	63.18	65.43	66.59	65.64	67.83	68.73
50	TC	Btu/h	25,500	19,000	12,200	28,700	22,200	15,100	36,983	30,968	24,245	41,970	38,330	36,490
	S/T	-	0.63	0.74	0.80	0.52	0.57	0.56	0.300	0.270	0.250	0.135	0.084	0.064
	CMPR	kW	2.3	2.3	2.3	2.3	2.3	2.3	2.4	2.3	2.3	2.4	2.4	2.3
	LDB	°F	67.7	70.74	72.78	68.22	71.17	73.08	69.96	72.47	73.62	72.42	74.02	74.47
	LWB	°F	58.33	60.47	61.53	59.45	61.7	62.84	62.61	65.08	66.31	65.3	67.62	68.62
40	TC	Btu/h	29,400	22,900	16,600	32,600	26,100	19,500	40,504	34,414	27,950	43,650	39,580	37,110
	S/T	-	0.63	0.71	0.75	0.53	0.58	0.58	0.32	0.29	0.27	0.15	0.09	0.06
	CMPR	kW	2.3	2.3	2.3	2.3	2.3	2.3	2.3	2.3	2.3	2.4	2.3	2.3
	LDB	°F	66.58	70.07	72.17	67.15	70.41	72.43	69.11	71.98	73.28	72.02	73.92	74.49
	LWB	°F	57.66	60.04	61.18	58.79	61.29	62.50	62.06	64.74	66.04	65.05	67.51	68.58

TC: Total Capacity (Btu/h); S/T: Sensible to Total Capacity Ratio; CMPR: Compressor Power (kW); LDB: Leaving Dry Bulb Temperature (°F); LWB: Leaving Wet Bulb Temperature (°F)

DRC 120 (10 Tons) With iLINQ Control In Modulating Hot Gas Reheat Mode-High Stage

EAT (DB °F)			75			75			75			75		
EAT (WB °F)			62			64			68			71		
Ambient Temperature (DB °F)		SCFM	2250	3500	4000	2250	3500	4000	2250	3500	4000	2250	3500	4000
95	TC	Btu/h	31,800	24,800	19,500	37,400	30,300	24,600	53,885	46,723	38,710	70,527	61,072	54,228
	S/T	-	0.35	0.39	0.54	0.23	0.23	0.28	0.12	0.09	0.09	0.10	0.07	0.06
	CMPR	kW	6.7	6.6	6.6	6.8	6.7	6.7	6.8	6.8	6.8	7.0	7.0	7.1
	LDB	°F	70.50	72.49	72.61	71.52	73.19	73.43	72.39	73.91	74.21	72.15	73.89	74.26
	LWB	°F	57.88	60.24	60.95	58.72	61.33	62.12	60.93	64.20	65.28	62.20	66.32	67.41
80	TC	Btu/h	47,300	41,100	42,300	54,200	48,000	47,300	72,648	67,885	63,508	91,374	89,139	83,246
	S/T	-	0.44	0.48	0.59	0.36	0.39	0.45	0.27	0.28	0.26	0.25	0.25	0.24
	CMPR	kW	5.9	5.8	5.8	5.9	5.9	5.9	5.9	6.0	6.0	5.9	6.1	6.1
	LDB	°F	66.59	69.88	69.33	67.12	70.14	70.16	67.07	70.06	71.25	65.77	69.21	70.46
	LWB	°F	55.45	58.68	59.07	56.12	59.67	60.29	58.15	62.34	63.42	59.17	63.95	65.33
75	TC	Btu/h	52,700	46,500	47,400	59,500	53,400	52,400	77,626	72,333	68,215	94,353	88,883	86,243
	S/T	-	0.46	0.50	0.58	0.38	0.41	0.45	0.28	0.28	0.28	0.26	0.27	0.26
	CMPR	kW	5.8	5.6	5.6	5.8	5.7	5.7	5.8	5.8	5.7	5.8	5.8	5.8
	LDB	°F	65.21	68.96	68.75	65.86	69.31	69.64	66.22	69.74	70.66	65.09	68.77	69.90
	LWB	°F	54.57	58.16	58.64	55.27	59.16	59.87	57.39	61.94	63.06	58.73	63.97	65.11
70	TC	Btu/h	58,100	51,900	52,500	64,900	58,800	57,500	82,762	77,278	73,408	98,240	91,498	91,998
	S/T	-	0.47	0.51	0.57	0.40	0.43	0.45	0.32	0.33	0.29	0.28	0.31	0.27
	CMPR	kW	5.6	5.4	5.4	5.6	5.5	5.5	5.6	5.6	5.6	5.6	5.6	5.7
	LDB	°F	63.97	68.12	68.20	64.51	68.43	69.12	64.30	68.38	70.16	63.89	67.63	69.35
	LWB	°F	53.67	57.63	58.20	54.39	58.64	59.45	56.58	61.48	62.66	58.14	63.74	64.68
65	TC	Btu/h	63,385	57,309	58,349	70,396	64,320	63,290	88,513	83,780	80,341	104,726	102,800	103,902
	S/T	-	0.48	0.53	0.57	0.42	0.45	0.47	0.34	0.34	0.29	0.32	0.32	0.27
	CMPR	kW	5.4	5.2	5.2	5.4	5.3	5.3	5.4	5.4	5.4	5.3	5.6	5.8
	LDB	°F	62.71	67.11	67.44	63.05	67.48	68.24	62.84	67.60	69.70	61.46	66.46	68.62
	LWB	°F	52.78	57.09	57.70	53.48	58.10	58.96	55.66	60.89	62.12	57.13	62.75	63.80

DRC (10 Tons) With iLINQ Control In Modulating Hot Gas Reheat Mode-Low Stage

EAT (DB °F)			75			75			75			75		
EAT (WB °F)			62			64			68			71		
Ambient Temperature (DB °F)		SCFM	2250	3500	4000	2250	3500	4000	2250	3500	4000	2250	3500	4000
60	TC	Btu/h	27,200	22,000	18,800	30,600	25,400	23,100	40,553	36,807	35,000	49,000	48,634	46,200
	S/T	-	0.56	0.77	0.82	0.44	0.59	0.60	0.23	0.27	0.26	0.09	0.06	0.06
	CMPR	kW	2.8	2.8	2.8	2.8	2.8	2.8	2.8	2.8	2.8	2.8	2.8	2.8
	LDB	°F	68.85	70.60	71.50	69.56	71.11	71.85	71.23	72.42	72.93	73.22	74.24	74.37
	LWB	°F	58.56	60.48	61.00	59.71	61.75	62.22	62.77	65.02	65.53	65.08	67.32	67.96
50	TC	Btu/h	31,900	26,700	23,100	35,300	30,100	27,300	44,936	41,003	42,622	50,996	50,750	48,200
	S/T	-	0.59	0.76	0.82	0.47	0.61	0.64	0.27	0.29	0.30	0.12	0.09	0.08
	CMPR	kW	2.7	2.7	2.7	2.7	2.7	2.7	2.7	2.7	2.7	2.8	2.7	2.7
	LDB	°F	67.40	69.73	70.70	68.30	70.23	71.03	70.10	71.91	72.09	72.53	73.81	74.12
	LWB	°F	57.84	60.04	60.65	59.01	61.32	61.88	62.16	64.66	64.97	64.81	67.15	67.82
40	TC	Btu/h	36,600	31,400	27,300	40,000	34,800	31,600	49,189	45,031	44,820	53,009	51,791	50,500
	S/T	-	0.60	0.76	0.83	0.50	0.63	0.66	0.30	0.32	0.32	0.14	0.10	0.07
	CMPR	kW	2.6	2.6	2.6	2.6	2.6	2.7	2.7	2.6	2.7	2.7	2.7	2.7
	LDB	°F	66.13	68.80	69.85	66.92	69.31	70.26	69.04	71.26	71.74	72.00	73.65	74.20
	LWB	°F	57.11	59.59	60.30	58.29	60.88	61.54	61.56	64.32	64.81	64.54	67.06	67.67

TC: Total Capacity (Btu/h); S/T: Sensible to Total Capacity Ratio; CMPR: Compressor Power (kW); LDB: Leaving Dry Bulb Temperature (°F); LWB: Leaving Wet Bulb Temperature (°F)

DRC 150 (12.5 Tons) With iLINQ Control In Modulating Hot Gas Reheat Mode-High Stage

EAT (DB °F)			75			75			75			75		
EAT (WB °F)			62			64			68			71		
Ambient Temperature (DB °F)		SCFM	2250	3800	4200	2250	3800	4200	2250	3800	4200	2250	3800	4200
95	TC	Btu/h	45,100	41,500	41,100	50,700	51,900	52,500	75,710	82,800	83,500	99,092	108,230	116,972
	S/T	-	0.39	0.55	0.59	0.28	0.43	0.48	0.21	0.27	0.33	0.18	0.20	0.24
	CMPR	kW	8.6	8.7	8.7	8.8	8.9	8.9	9.2	9.3	9.4	9.4	9.7	9.8
	LDB	°F	67.89	69.54	69.75	69.26	69.66	69.55	68.58	69.65	69.04	67.79	69.82	68.92
	LWB	°F	55.81	58.96	59.33	56.69	59.69	60.06	57.70	61.59	62.18	58.05	63.05	63.24
80	TC	Btu/h	51,900	54,400	55,300	57,800	60,800	61,400	79,180	86,830	88,790	99,590	114,016	116,387
	S/T	-	0.39	0.55	0.59	0.30	0.42	0.46	0.21	0.27	0.28	0.19	0.24	0.25
	CMPR	kW	7.5	7.4	7.4	7.6	7.6	7.5	7.8	7.9	8.0	7.7	8.1	8.2
	LDB	°F	66.82	67.84	67.94	67.99	68.89	68.89	68.28	69.39	69.62	67.35	68.45	68.70
	LWB	°F	54.71	57.80	58.19	55.56	58.91	59.36	57.17	61.25	61.79	57.97	62.57	63.28
75	TC	Btu/h	54,200	58,700	60,100	60,200	63,700	64,300	79,360	87,560	89,790	96,461	107,594	113,520
	S/T	-	0.39	0.54	0.59	0.30	0.42	0.45	0.20	0.26	0.27	0.19	0.25	0.25
	CMPR	kW	7.3	7.2	7.2	7.4	7.3	7.3	7.5	7.6	7.7	7.5	7.7	7.8
	LDB	°F	66.46	67.42	67.32	67.70	68.60	68.74	68.59	69.55	69.75	67.59	68.56	68.86
	LWB	°F	54.33	57.41	57.80	55.18	58.65	59.14	57.14	61.19	61.72	58.44	63.09	63.48
70	TC	Btu/h	56,500	63,000	64,800	62,500	66,700	67,300	80,630	87,630	88,890	95,709	103,755	111,401
	S/T	-	0.39	0.54	0.59	0.31	0.41	0.45	0.20	0.25	0.27	0.18	0.24	0.25
	CMPR	kW	7.0	6.9	6.9	7.2	7.1	7.1	7.3	7.4	7.4	7.3	7.4	7.5
	LDB	°F	66.10	66.86	66.72	67.17	68.46	68.44	68.48	69.76	69.81	68.04	69.04	68.97
	LWB	°F	53.96	57.01	57.41	54.80	58.38	58.90	56.94	61.19	61.79	58.55	63.40	63.63
65	TC	Btu/h	58,802	67,312	69,574	64,872	69,631	70,226	83,937	86,828	85,179	99,312	105,332	110,159
	S/T	-	0.39	0.54	0.59	0.31	0.41	0.44	0.20	0.25	0.29	0.19	0.24	0.27
	CMPR	kW	6.7	6.7	6.6	6.9	6.8	6.8	7.0	7.1	7.0	6.9	7.3	7.5
	LDB	°F	65.73	66.30	66.12	66.87	68.17	68.31	68.22	69.81	69.65	67.38	68.95	68.56
	LWB	°F	53.57	56.61	57.01	54.42	58.12	58.66	56.43	61.26	62.06	58.01	63.28	63.72

DRC 150 (12.5 Tons) With iLINQ Control In Modulating Hot Gas Reheat Mode-Low Stage

EAT (DB °F)			75			75			75			75		
EAT (WB °F)			62			64			68			71		
Ambient Temperature (DB °F)		SCFM	2250	3800	4200	2250	3800	4200	2250	3800	4200	2250	3800	4200
60	TC	Btu/h	17,700	9,000	6,200	21,500	13,100	10,600	32,772	24,946	24,671	45,000	45,260	44,510
	S/T	-	0.46	0.68	0.68	0.28	0.31	0.24	0.050	0.040	0.080	0.016	0.007	0.001
	CMPR	kW	3.7	3.6	3.6	3.7	3.6	3.6	3.7	3.7	3.7	3.8	3.8	3.8
	LDB	°F	71.71	73.54	74.09	72.57	74.03	74.45	74.34	74.76	74.57	74.71	74.92	74.99
	LWB	°F	59.98	61.75	62.03	61.04	62.95	63.24	63.84	66.18	66.37	65.60	67.87	68.23
50	TC	Btu/h	23,200	15,200	12,500	27,100	19,200	16,900	37,698	31,359	30,049	47,000	46,020	45,550
	S/T	-	0.49	0.62	0.61	0.35	0.38	0.35	0.110	0.100	0.080	0.011	0.000	0.000
	CMPR	kW	3.6	3.6	3.6	3.6	3.6	3.6	3.7	3.6	3.6	3.7	3.7	3.7
	LDB	°F	70.41	72.75	73.35	71.17	73.25	73.72	73.32	74.25	74.48	74.79	75.00	75.00
	LWB	°F	59.17	61.23	61.56	60.23	62.45	62.77	63.18	65.69	66.01	65.35	67.82	68.16
40	TC	Btu/h	28,800	21,300	18,800	32,600	25,300	23,200	42,206	36,367	35,232	46,610	45,820	45,480
	S/T	-	0.51	0.59	0.59	0.39	0.42	0.40	0.160	0.150	0.150	0.004	0.001	0.000
	CMPR	kW	3.6	3.5	3.5	3.6	3.6	3.6	3.7	3.6	3.6	3.7	3.7	3.7
	LDB	°F	69.07	71.99	72.60	69.86	72.46	72.99	72.27	73.69	73.86	74.92	74.99	75.00
	LWB	°F	58.32	60.71	61.08	59.42	61.95	62.30	62.55	65.31	65.65	65.40	67.83	68.16

TC: Total Capacity (Btu/h); S/T: Sensible to Total Capacity Ratio; CMPR: Compressor Power (kW); LDB: Leaving Dry Bulb Temperature (°F); LWB: Leaving Wet Bulb Temperature (°F)

Electrical Data

Model Number	Electrical Rating	Compressor			Outdoor Fan Motor			Indoor Fan Motor			Optional Electric Heat			Optional Powered Convienience Outlet	Optional Power Exhaust	Power Supply	
		QTY	RLA	LRA	QTY	HP	FLA	Type	HP	FLA	Part #	KW*	FLA	FLA	FLA	MCA	MOP
DRC0903D	208/230/3/60	2	13.1	83.1	2	0.33	2	Direct Drive Standard Static	1.7	5.8	-	-	-	-	-	39.4/39.4	50/50
											-	-	-	9.6/8.7	-	49.0/48.1	60/60
											-	-	-	-	3.3/3.0	42.7/42.4	50/50
											-	-	-	9.6/8.7	3.3/3.0	52.3/51.1	60/60
											EH*D-3M10	7.51/10.0	20.8/24.1	-	-	39.4/39.4	50/50
														9.6/8.7	-	49.0/48.2	60/60
														-	3.3/3.0	42.7/42.4	50/50
														9.6/8.7	3.3/3.0	52.3/51.9	60/60
											EH*D-3M15	11.3/15.0	31.3/36.1	-	-	46.3/52.4	50/60
														9.6/8.7	-	58.3/63.2	60/70
														-	3.3/3.0	50.5/56.1	60/60
														9.6/8.7	3.3/3.0	62.5/67.0	70/70
											EH*D-3M20	15.0/20.0	41.7/48.1	-	-	59.4/67.4	60/70
														9.6/8.7	-	71.4/78.3	80/80
														-	3.3/3.0	63.5/71.1	70/80
														9.6/8.7	3.3/3.0	75.5/82.0	80/90
											EH*D-3M30	22.5/30.0	62.5/72.2	-	-	85.4/97.5	90/100
														9.6/8.7	-	97.4/108	100/110
														-	3.3/3.0	89.6/101	90/110
														9.6/8.7	3.3/3.0	102/112	110/125
											EH*D-3M45	33.8/45.0	93.8/108	-	-	125/143	125/150
														9.6/8.7	-	137/153	150/175
														-	3.3/3.0	129/146	150/150
														9.6/8.7	3.3/3.0	141/157	150/175
DRC0903L	208/230/3/60	2	13.1	83.1	2	0.33	2	Direct Drive Medium Static	2.4	8	-	-	-	-	-	41.6/41.6	50/50
											-	-	-	9.6/8.7	-	51.2/50.3	60/60
											-	-	-	-	3.3/3.0	44.9/44.6	50/50
											-	-	-	9.6/8.7	3.3/3.0	54.5/53.3	60/60
											EH*D-3M10	7.51/10.0	20.8/24.1	-	-	41.6/41.6	50/50
														9.6/8.7	-	51.2/50.9	60/60
														-	3.3/3.0	44.9/44.6	50/50
														9.6/8.7	3.3/3.0	54.5/54.7	60/60
											EH*D-3M15	11.3/15.0	31.3/36.1	-	-	49.1/55.1	50/60
														9.6/8.7	-	61.1/66.0	70/70
														-	3.3/3.0	53.2/58.9	60/60
														9.6/8.7	3.3/3.0	65.2/69.7	70/70
											EH*D-3M20	15.0/20.0	41.7/48.1	-	-	62.1/70.1	70/80
														9.6/8.7	-	74.1/81.0	80/90
														-	3.3/3.0	66.2/73.9	70/80
														9.6/8.7	3.3/3.0	78.2/84.8	80/90
											EH*D-3M30	22.5/30.0	62.5/72.2	-	-	88.2/100	90/110
														9.6/8.7	-	100/111	110/125
														-	3.3/3.0	92.3/104	100/110
														9.6/8.7	3.3/3.0	104/115	110/125
											EH*D-3M45	33.8/45.0	93.8/108	-	-	127/145	150/150
														9.6/8.7	-	139/156	150/175
														-	3.3/3.0	131/149	150/150
														9.6/8.7	3.3/3.0	143/160	150/175

Electrical Data

Model Number	Electrical Rating	Compressor			Outdoor Fan Motor			Indoor Fan Motor			Optional Electric Heat			Optional Powered Convienience Outlet	Optional Power Exhaust	Power Supply	
		QTY	RLA	LRA	QTY	HP	FLA	Type	HP	FLA	Part #	KW*	FLA	FLA	FLA	MCA	MOP
DRC0903W	208/230/3/60	2	13.1	83.1	2	0.33	2	Direct Drive High Static	3.5	10.9	-	-	-	-	-	44.5/44.5	50/50
											-	-	-	9.6/8.7	-	54.1/53.2	60/60
											-	-	-	-	3.3/3.0	47.8/47.5	50/50
											-	-	-	9.6/8.7	3.3/3.0	57.4/56.2	60/60
											EH*D-3M10	7.51/10.0	20.8/24.1	-	-	44.5/44.5	50/50
														9.6/8.7	-	54.1/54.6	60/60
														-	3.3/3.0	47.8/47.5	50/50
														9.6/8.7	3.3/3.0	57.4/58.3	60/60
											EH*D-3M15	11.3/15.0	31.3/36.1	-	-	52.7/58.7	60/60
														9.6/8.7	-	64.7/69.6	70/70
														-	3.3/3.0	56.8/62.5	60/70
														9.6/8.7	3.3/3.0	68.8/73.4	70/80
											EH*D-3M20	15.0/20.0	41.7/48.1	-	-	65.7/73.8	70/80
														9.6/8.7	-	77.7/84.6	80/90
														-	3.3/3.0	69.9/77.5	70/80
														9.6/8.7	3.3/3.0	81.9/88.4	90/90
											EH*D-3M30	22.5/30.0	62.5/72.2	-	-	91.8/104	100/110
														9.6/8.7	-	104/115	110/125
														-	3.3/3.0	95.9/108	100/110
														9.6/8.7	3.3/3.0	108/118	110/125
											EH*D-3M45	33.8/45.0	93.8/108	-	-	131/149	150/150
														9.6/8.7	-	143/160	150/175
														-	3.3/3.0	135/153	150/175
														9.6/8.7	3.3/3.0	147/164	150/175
DRC0904D	460/3/60	2	6.1	41	2	0.33	0.85	Direct Drive Standard Static	1.7	4	-	-	-	-	-	19.4	25
											-	-	-	4.3	-	23.7	25
											-	-	-	-	1	20.4	25
											-	-	-	4.3	1	24.7	25
											EH*D-4M10	10	12	-	-	20	25
														4.3	-	25.4	30
														-	1	21.3	25
														4.3	1	26.7	30
											EH*D-4M15	15	18	-	-	27.6	30
														4.3	-	32.9	35
														-	1	28.8	30
														4.3	1	34.2	35
											EH*D-4M20	20	24.1	-	-	35.1	40
														4.3	-	40.4	45
														-	1	36.3	40
														4.3	1	41.7	45
											EH*D-4M30	30	36.1	-	-	50.1	60
														4.3	-	55.5	60
														-	1	51.4	60
														4.3	1	56.7	60
											EH*D-4M45	45	54.1	-	-	72.7	80
														4.3	-	78	80
														-	1	73.9	80
														4.3	1	79.3	80

Electrical Data

Model Number	Electrical Rating	Compressor			Outdoor Fan Motor			Indoor Fan Motor			Optional Electric Heat			Optional Powered Convienience Outlet	Optional Power Exhaust	Power Supply	
		QTY	RLA	LRA	QTY	HP	FLA	Type	HP	FLA	Part #	KW*	FLA	FLA	FLA	MCA	MOP
DRC0904L	460/3/60	2	6.1	41	2	0.33	0.85	Direct Drive Medium Static	2.4	5.4	-	-	-	-	-	20.8	25
											-	-	-	4.3	-	25.1	30
											-	-	-	-	1	21.8	25
											-	-	-	4.3	1	26.1	30
											EH*D-4M10	10	12	-	-	21.8	25
														4.3	-	27.2	30
														-	1	23	25
														4.3	1	28.4	30
											EH*D-4M15	15	18	-	-	29.3	30
														4.3	-	34.7	35
														-	1	30.6	35
														4.3	1	35.9	40
											EH*D-4M20	20	24.1	-	-	36.8	40
														4.3	-	42.2	45
														-	1	38.1	40
														4.3	1	43.4	45
											EH*D-4M30	30	36.1	-	-	51.9	60
														4.3	-	57.2	60
														-	1	53.1	60
														4.3	1	58.5	60
											EH*D-4M45	45	54.1	-	-	74.4	80
														4.3	-	79.8	80
														-	1	75.7	80
														4.3	1	81	90
DRC0904W	460/3/60	2	6.1	41	2	0.33	0.85	Direct Drive High Static	3.5	7.2	-	-	-	-	-	22.6	25
											-	-	-	4.3	-	26.9	30
											-	-	-	-	1	23.6	25
											-	-	-	4.3	1	27.9	30
											EH*D-4M10	10	12	-	-	24	25
														4.3	-	29.4	30
														-	1	25.3	30
														4.3	1	30.7	35
											EH*D-4M15	15	18	-	-	31.6	35
														4.3	-	36.9	40
														-	1	32.8	35
														4.3	1	38.2	40
											EH*D-4M20	20	24.1	-	-	39.1	40
														4.3	-	44.4	45
														-	1	40.3	45
														4.3	1	45.7	50
											EH*D-4M30	30	36.1	-	-	54.1	60
														4.3	-	59.5	60
														-	1	55.4	60
														4.3	1	60.7	70
											EH*D-4M45	45	54.1	-	-	76.7	80
														4.3	-	82	90
														-	1	77.9	80
														4.3	1	83.3	90

Electrical Data

Model Number	Electrical Rating	Compressor			Outdoor Fan Motor			Indoor Fan Motor			Optional Electric Heat			Optional Powered Convienience Outlet	Optional Power Exhaust	Power Supply	
		QTY	RLA	LRA	QTY	HP	FLA	Type	HP	FLA	Part #	KW*	FLA	FLA	FLA	MCA	MOP
DRC0907D	575/3/60	2	4.4	33	2	0.33	0.67	Direct Drive Standard Static	1.7	2.9	-	-	-	-	-	14	15
											-	-	-	3.5	-	17.5	20
											-	-	-	-	1.2	15.2	20
											-	-	-	3.5	1.2	18.7	20
											EH*D-7M10	10	9.62	-	-	15.7	20
														3.5	-	20	25
														-	1.2	17.2	20
														3.5	1.2	21.5	25
											EH*D-7M15	15	14.4	-	-	21.7	25
														3.5	-	26	30
														-	1.2	23.2	25
														3.5	1.2	27.5	30
											EH*D-7M20	20	19.2	-	-	27.7	30
														3.5	-	32.1	35
														-	1.2	29.2	30
														3.5	1.2	33.6	35
											EH*D-7M30	30	28.9	-	-	39.7	40
														3.5	-	44.1	45
														-	1.2	41.2	45
														3.5	1.2	45.6	50
											EH*D-7M45	45	43.3	-	-	57.8	60
														3.5	-	62.1	70
														-	1.2	59.3	60
														3.5	1.2	63.6	70
DRC0907L	575/3/60	2	4.4	33	2	0.33	0.67	Direct Drive Medium Static	2.4	4	-	-	-	-	-	15.1	20
											-	-	-	3.5	-	18.6	20
											-	-	-	-	1.2	16.3	20
											-	-	-	3.5	1.2	19.8	20
											EH*D-7M10	10	9.62	-	-	17	20
														3.5	-	21.4	25
														-	1.2	18.5	20
														3.5	1.2	22.9	25
											EH*D-7M15	15	14.4	-	-	23	25
														3.5	-	27.4	30
														-	1.2	24.5	25
														3.5	1.2	28.9	30
											EH*D-7M20	20	19.2	-	-	29.1	30
														3.5	-	33.4	35
														-	1.2	30.6	35
														3.5	1.2	34.9	35
											EH*D-7M30	30	28.9	-	-	41.1	45
														3.5	-	45.5	50
														-	1.2	42.6	45
														3.5	1.2	47	50
											EH*D-7M45	45	43.3	-	-	59.1	60
														3.5	-	63.5	70
														-	1.2	60.6	70
														3.5	1.2	65	70

Electrical Data

Model Number	Electrical Rating	Compressor			Outdoor Fan Motor			Indoor Fan Motor			Optional Electric Heat			Optional Powered Convienience Outlet	Optional Power Exhaust	Power Supply	
		QTY	RLA	LRA	QTY	HP	FLA	Type	HP	FLA	Part #	KW*	FLA	FLA	FLA	MCA	MOP
DRC0907W	575/3/60	2	4.4	33	2	0.33	0.67	Direct Drive High Static	3.5	5	-	-	-	-	-	16.1	20
											-	-	-	3.5	-	19.6	20
											-	-	-	-	1.2	17.3	20
											-	-	-	3.5	1.2	20.8	25
											EH*D-7M10	10	9.62	-	-	18.3	20
														3.5	-	22.7	25
														-	1.2	19.8	20
														3.5	1.2	24.2	25
											EH*D-7M15	15	14.4	-	-	24.3	25
														3.5	-	28.7	30
														-	1.2	25.8	30
														3.5	1.2	30.2	35
											EH*D-7M20	20	19.2	-	-	30.3	35
														3.5	-	34.7	35
														-	1.2	31.8	35
														3.5	1.2	36.2	40
											EH*D-7M30	30	28.9	-	-	42.3	45
														3.5	-	46.7	50
														-	1.2	43.8	45
														3.5	1.2	48.2	50
											EH*D-7M45	45	43.3	-	-	60.4	70
														3.5	-	64.8	70
														-	1.2	61.9	70
														3.5	1.2	66.3	70
DRC1023D	208/230/3/60	2	14.5	98	2	0.33	2	Direct Drive Standard Static	2.4	8	-	-	-	-	-	44.6/44.6	50/50
											-	-	-	9.6/8.7	-	54.2/53.3	60/60
											-	-	-	-	3.3/3.0	47.9/47.6	50/50
											-	-	-	9.6/8.7	3.3/3.0	57.5/56.3	60/60
											EH*D-3M10	7.51/10.0	20.8/24.1	-	-	44.6/44.6	50/50
														9.6/8.7	-	54.2/53.3	60/60
														-	3.3/3.0	47.9/47.6	50/50
														9.6/8.7	3.3/3.0	57.5/56.3	60/60
											EH*D-3M15	11.3/15.0	31.3/36.1	-	-	49.1/55.1	50/60
														9.6/8.7	-	61.1/66.0	70/70
														-	3.3/3.0	53.2/58.9	60/60
														9.6/8.7	3.3/3.0	65.2/69.7	70/70
											EH*D-3M20	15.0/20.0	41.7/48.1	-	-	62.1/70.1	70/80
														9.6/8.7	-	74.1/81.0	80/90
														-	3.3/3.0	66.2/73.9	70/80
														9.6/8.7	3.3/3.0	78.2/84.8	80/90
											EH*D-3M30	22.5/30.0	62.5/72.2	-	-	88.2/100	90/110
														9.6/8.7	-	100/111	110/125
														-	3.3/3.0	92.3/104	100/110
														9.6/8.7	3.3/3.0	104/115	110/125
											EH*D-3M45	33.8/45.0	93.8/108	-	-	127/145	150/150
														9.6/8.7	-	139/156	150/175
														-	3.3/3.0	131/149	150/150
														9.6/8.7	3.3/3.0	143/160	150/175

Electrical Data

Model Number	Electrical Rating	Compressor			Outdoor Fan Motor			Indoor Fan Motor			Optional Electric Heat			Optional Powered Convienience Outlet	Optional Power Exhaust	Power Supply	
		QTY	RLA	LRA	QTY	HP	FLA	Type	HP	FLA	Part #	KW*	FLA	FLA	FLA	MCA	MOP
DRC1023L	208/230/3/60	2	14.5	98	2	0.33	2	Direct Drive Medium Static	2.4	8	-	-	-	-	-	44.6/44.6	50/50
											-	-	-	9.6/8.7	-	54.2/53.3	60/60
											-	-	-	-	3.3/3.0	47.9/47.6	50/50
											-	-	-	9.6/8.7	3.3/3.0	57.5/56.3	60/60
											EH*D-3M10	7.51/10.0	20.8/24.1	-	-	44.6/44.6	50/50
														9.6/8.7	-	54.2/53.3	60/60
														-	3.3/3.0	47.9/47.6	50/50
														9.6/8.7	3.3/3.0	57.5/56.3	60/60
											EH*D-3M15	11.3/15.0	31.3/36.1	-	-	49.1/55.1	50/60
														9.6/8.7	-	61.1/66.0	70/70
														-	3.3/3.0	53.2/58.9	60/60
														9.6/8.7	3.3/3.0	65.2/69.7	70/70
											EH*D-3M20	15.0/20.0	41.7/48.1	-	-	62.1/70.1	70/80
														9.6/8.7	-	74.1/81.0	80/90
														-	3.3/3.0	66.2/73.9	70/80
														9.6/8.7	3.3/3.0	78.2/84.8	80/90
											EH*D-3M30	22.5/30.0	62.5/72.2	-	-	88.2/100	90/110
														9.6/8.7	-	100/111	110/125
														-	3.3/3.0	92.3/104	100/110
														9.6/8.7	3.3/3.0	104/115	110/125
											EH*D-3M45	33.8/45.0	93.8/108	-	-	127/145	150/150
														9.6/8.7	-	139/156	150/175
														-	3.3/3.0	131/149	150/150
														9.6/8.7	3.3/3.0	143/160	150/175
DRC1023W	208/230/3/60	2	14.5	98	2	0.33	2	Direct Drive High Static	3.5	10.9	-	-	-	-	-	47.5/47.5	60/60
											-	-	-	9.6/8.7	-	57.1/56.2	70/70
											-	-	-	-	3.3/3.0	50.8/50.5	60/60
											-	-	-	9.6/8.7	3.3/3.0	60.4/59.2	70/70
											EH*D-3M10	7.51/10.0	20.8/24.1	-	-	47.5/47.5	60/60
														9.6/8.7	-	57.1/56.2	70/70
														-	3.3/3.0	50.8/50.5	60/60
														9.6/8.7	3.3/3.0	60.4/59.2	70/70
											EH*D-3M15	11.3/15.0	31.3/36.1	-	-	52.7/58.7	60/60
														9.6/8.7	-	64.7/69.6	70/70
														-	3.3/3.0	56.8/62.5	60/70
														9.6/8.7	3.3/3.0	68.8/73.4	70/80
											EH*D-3M20	15.0/20.0	41.7/48.1	-	-	65.7/73.8	70/80
														9.6/8.7	-	77.7/84.6	80/90
														-	3.3/3.0	69.9/77.5	70/80
														9.6/8.7	3.3/3.0	81.9/88.4	90/90
											EH*D-3M30	22.5/30.0	62.5/72.2	-	-	91.8/104	100/110
														9.6/8.7	-	104/115	110/125
														-	3.3/3.0	95.9/108	100/110
														9.6/8.7	3.3/3.0	108/118	110/125
											EH*D-3M45	33.8/45.0	93.8/108	-	-	131/149	150/150
														9.6/8.7	-	143/160	150/175
														-	3.3/3.0	135/153	150/175
														9.6/8.7	3.3/3.0	147/164	150/175

Electrical Data

Model Number	Electrical Rating	Compressor			Outdoor Fan Motor			Indoor Fan Motor			Optional Electric Heat			Optional Powered Convienience Outlet	Optional Power Exhaust	Power Supply	
		QTY	RLA	LRA	QTY	HP	FLA	Type	HP	FLA	Part #	KW*	FLA	FLA	FLA	MCA	MOP
DRC1024D	460/3/60	2	6.3	55	2	0.33	0.85	Direct Drive Standard Static	2.4	5.4	-	-	-	-	-	21.4	25
											-	-	-	4.3	-	25.7	30
											-	-	-	-	1	22.4	25
											-	-	-	4.3	1	26.7	30
											EH*D-4M10	10	12	-	-	21.8	25
														4.3	-	27.2	30
														-	1	23	25
														4.3	1	28.4	30
											EH*D-4M15	15	18	-	-	29.3	30
														4.3	-	34.7	35
														-	1	30.6	35
														4.3	1	35.9	40
											EH*D-4M20	20	24.1	-	-	36.8	40
														4.3	-	42.2	45
														-	1	38.1	40
														4.3	1	43.4	45
											EH*D-4M30	30	36.1	-	-	51.9	60
														4.3	-	57.2	60
														-	1	53.1	60
														4.3	1	58.5	60
											EH*D-4M45	45	54.1	-	-	74.4	80
														4.3	-	79.8	80
														-	1	75.7	80
														4.3	1	81	90
DRC1024L	460/3/60	2	6.3	55	2	0.33	0.85	Direct Drive Medium Static	2.4	5.4	-	-	-	-	-	21.4	25
											-	-	-	4.3	-	25.7	30
											-	-	-	-	1	22.4	25
											-	-	-	4.3	1	26.7	30
											EH*D-4M10	10	12	-	-	21.8	25
														4.3	-	27.2	30
														-	1	23	25
														4.3	1	28.4	30
											EH*D-4M15	15	18	-	-	29.3	30
														4.3	-	34.7	35
														-	1	30.6	35
														4.3	1	35.9	40
											EH*D-4M20	20	24.1	-	-	36.8	40
														4.3	-	42.2	45
														-	1	38.1	40
														4.3	1	43.4	45
											EH*D-4M30	30	36.1	-	-	51.9	60
														4.3	-	57.2	60
														-	1	53.1	60
														4.3	1	58.5	60
											EH*D-4M45	45	54.1	-	-	74.4	80
														4.3	-	79.8	80
														-	1	75.7	80
														4.3	1	81	90

Electrical Data

Model Number	Electrical Rating	Compressor			Outdoor Fan Motor			Indoor Fan Motor			Optional Electric Heat			Optional Powered Convienience Outlet	Optional Power Exhaust	Power Supply	
		QTY	RLA	LRA	QTY	HP	FLA	Type	HP	FLA	Part #	KW*	FLA	FLA	FLA	MCA	MOP
DRC1024W	460/3/60	2	6.3	55	2	0.33	0.85	Direct Drive High Static	3.5	7.2	-	-	-	-	-	23.2	25
											-	-	-	4.3	-	27.5	30
											-	-	-	-	1	24.2	25
											-	-	-	4.3	1	28.5	30
											EH*D-4M10	10	12	-	-	24	25
														4.3	-	29.4	30
														-	1	25.3	30
														4.3	1	30.7	35
											EH*D-4M15	15	18	-	-	31.6	35
														4.3	-	36.9	40
														-	1	32.8	35
														4.3	1	38.2	40
											EH*D-4M20	20	24.1	-	-	39.1	40
														4.3	-	44.4	45
														-	1	40.3	45
														4.3	1	45.7	50
											EH*D-4M30	30	36.1	-	-	54.1	60
														4.3	-	59.5	60
														-	1	55.4	60
														4.3	1	60.7	70
											EH*D-4M45	45	54.1	-	-	76.7	80
														4.3	-	82	90
														-	1	77.9	80
														4.3	1	83.3	90
DRC1027D	575/3/60	2	6	41	2	0.33	0.67	Direct Drive Standard Static	2.4	4	-	-	-	-	-	18.9	20
											-	-	-	3.5	-	22.4	25
											-	-	-	-	1.2	20.1	25
											-	-	-	3.5	1.2	23.6	25
											EH*D-7M10	10	9.62	-	-	18.9	20
														3.5	-	22.4	25
														-	1.2	20.1	25
														3.5	1.2	23.6	25
											EH*D-7M15	15	14.4	-	-	23	25
														3.5	-	27.4	30
														-	1.2	24.5	25
														3.5	1.2	28.9	30
											EH*D-7M20	20	19.2	-	-	29.1	30
														3.5	-	33.4	35
														-	1.2	30.6	35
														3.5	1.2	34.9	35
											EH*D-7M30	30	28.9	-	-	41.1	45
														3.5	-	45.5	50
														-	1.2	42.6	45
														3.5	1.2	47	50
											EH*D-7M45	45	43.3	-	-	59.1	60
														3.5	-	63.5	70
														-	1.2	60.6	70
														3.5	1.2	65	70

Electrical Data

Model Number	Electrical Rating	Compressor			Outdoor Fan Motor			Indoor Fan Motor			Optional Electric Heat			Optional Powered Convienience Outlet	Optional Power Exhaust	Power Supply	
		QTY	RLA	LRA	QTY	HP	FLA	Type	HP	FLA	Part #	KW*	FLA	FLA	FLA	MCA	MOP
DRC1027L	575/3/60	2	6	41	2	0.33	0.67	Direct Drive Medium Static	2.4	4	-	-	-	-	-	18.9	20
											-	-	-	3.5	-	22.4	25
											-	-	-	-	1.2	20.1	25
											-	-	-	3.5	1.2	23.6	25
											EH*D-7M10	10	9.62	-	-	18.9	20
														3.5	-	22.4	25
														-	1.2	20.1	25
														3.5	1.2	23.6	25
											EH*D-7M15	15	14.4	-	-	23	25
														3.5	-	27.4	30
														-	1.2	24.5	25
														3.5	1.2	28.9	30
											EH*D-7M20	20	19.2	-	-	29.1	30
														3.5	-	33.4	35
														-	1.2	30.6	35
														3.5	1.2	34.9	35
											EH*D-7M30	30	28.9	-	-	41.1	45
														3.5	-	45.5	50
														-	1.2	42.6	45
														3.5	1.2	47	50
											EH*D-7M45	45	43.3	-	-	59.1	60
														3.5	-	63.5	70
														-	1.2	60.6	70
														3.5	1.2	65	70
DRC1027W	575/3/60	2	6	41	2	0.33	0.67	Direct Drive High Static	3.5	5	-	-	-	-	-	19.9	25
											-	-	-	3.5	-	23.4	25
											-	-	-	-	1.2	21.1	25
											-	-	-	3.5	1.2	24.6	25
											EH*D-7M10	10	9.62	-	-	19.9	25
														3.5	-	23.4	25
														-	1.2	21.1	25
														3.5	1.2	24.6	25
											EH*D-7M15	15	14.4	-	-	24.3	25
														3.5	-	28.7	30
														-	1.2	25.8	30
														3.5	1.2	30.2	35
											EH*D-7M20	20	19.2	-	-	30.3	35
														3.5	-	34.7	35
														-	1.2	31.8	35
														3.5	1.2	36.2	40
											EH*D-7M30	30	28.9	-	-	42.3	45
														3.5	-	46.7	50
														-	1.2	43.8	45
														3.5	1.2	48.2	50
											EH*D-7M45	45	43.3	-	-	60.4	70
														3.5	-	64.8	70
														-	1.2	61.9	70
														3.5	1.2	66.3	70

Electrical Data

Model Number	Electrical Rating	Compressor			Outdoor Fan Motor			Indoor Fan Motor			Optional Electric Heat			Optional Powered Convienience Outlet	Optional Power Exhaust	Power Supply	
		QTY	RLA	LRA	QTY	HP	FLA	Type	HP	FLA	Part #	KW*	FLA	FLA	FLA	MCA	MOP
DRC1203D	208/230/3/60	2	15.9	110	2	0.33	2	Direct Drive Standard Static	2.4	8	-	-	-	-	-	47.8/47.8	60/60
											-	-	-	9.6/8.7	-	57.4/56.5	70/70
											-	-	-	-	3.3/3.0	51.1/50.8	60/60
											-	-	-	9.6/8.7	3.3/3.0	60.7/59.5	70/70
											EH*D-3M10	7.51/10.0	20.8/24.1	-	-	47.8/47.8	60/60
														9.6/8.7	-	57.4/56.5	70/70
														-	3.3/3.0	51.1/50.8	60/60
														9.6/8.7	3.3/3.0	60.7/59.5	70/70
											EH*D-3M15	11.3/15.0	31.3/36.1	-	-	49.1/55.1	60/60
														9.6/8.7	-	61.1/66.0	70/70
														-	3.3/3.0	53.2/58.9	60/60
														9.6/8.7	3.3/3.0	65.2/69.7	70/70
											EH*D-3M20	15.0/20.0	41.7/48.1	-	-	62.1/70.1	70/80
														9.6/8.7	-	74.1/81.0	80/90
														-	3.3/3.0	66.2/73.9	70/80
														9.6/8.7	3.3/3.0	78.2/84.8	80/90
											EH*D-3M30	22.5/30.0	62.5/72.2	-	-	88.2/100	90/110
														9.6/8.7	-	100/111	110/125
														-	3.3/3.0	92.3/104	100/110
														9.6/8.7	3.3/3.0	104/115	110/125
											EH*D-3M45	33.8/45.0	93.8/108	-	-	127/145	150/150
														9.6/8.7	-	139/156	150/175
														-	3.3/3.0	131/149	150/150
														9.6/8.7	3.3/3.0	143/160	150/175
											EH*D-3M60	45.1/60.0	125/144	-	-	166/154	175/175
														9.6/8.7	-	178/165	200/175
														-	3.3/3.0	170/158	175/175
														9.6/8.7	3.3/3.0	182/169	200/175
DRC1203L	208/230/3/60	2	15.9	110	2	0.33	2	Direct Drive Medium Static	3.5	10.9	-	-	-	-	-	50.7/50.7	60/60
											-	-	-	9.6/8.7	-	60.3/59.4	70/70
											-	-	-	-	3.3/3.0	54.0/53.7	60/60
											-	-	-	9.6/8.7	3.3/3.0	63.6/62.4	70/70
											EH*D-3M10	7.51/10.0	20.8/24.1	-	-	50.7/50.7	60/60
														9.6/8.7	-	60.3/59.4	70/70
														-	3.3/3.0	54.0/53.7	60/60
														9.6/8.7	3.3/3.0	63.6/62.4	70/70
											EH*D-3M15	11.3/15.0	31.3/36.1	-	-	52.7/58.7	60/60
														9.6/8.7	-	64.7/69.6	70/70
														-	3.3/3.0	56.8/62.5	60/70
														9.6/8.7	3.3/3.0	68.8/73.4	70/80
											EH*D-3M20	15.0/20.0	41.7/48.1	-	-	65.7/73.8	70/80
														9.6/8.7	-	77.7/84.6	80/90
														-	3.3/3.0	69.9/77.5	70/80
														9.6/8.7	3.3/3.0	81.9/88.4	90/90
											EH*D-3M30	22.5/30.0	62.5/72.2	-	-	91.8/104	100/110
														9.6/8.7	-	104/115	110/125
														-	3.3/3.0	95.9/108	100/110
														9.6/8.7	3.3/3.0	108/118	110/125
											EH*D-3M45	33.8/45.0	93.8/108	-	-	131/149	150/150
														9.6/8.7	-	143/160	150/175
														-	3.3/3.0	135/153	150/175
														9.6/8.7	3.3/3.0	147/164	150/175
											EH*D-3M60	45.1/60.0	125/144	-	-	170/158	175/175
														9.6/8.7	-	182/169	200/200
														-	3.3/3.0	174/162	175/175
														9.6/8.7	3.3/3.0	186/173	200/200

Electrical Data

Model Number	Electrical Rating	Compressor			Outdoor Fan Motor			Indoor Fan Motor			Optional Electric Heat			Optional Powered Convienience Outlet	Optional Power Exhaust	Power Supply	
		QTY	RLA	LRA	QTY	HP	FLA	Type	HP	FLA	Part #	KW*	FLA	FLA	FLA	MCA	MOP
DRC1203W	208/230/3/60	2	15.9	110	2	0.33	2	Direct Drive High Static	3.5	10.9	-	-	-	-	-	50.7/50.7	60/60
											-	-	-	9.6/8.7	-	60.3/59.4	70/70
											-	-	-	-	3.3/3.0	54.0/53.7	60/60
											-	-	-	9.6/8.7	3.3/3.0	63.6/62.4	70/70
											EH*D-3M10	7.51/10.0	20.8/24.1	-	-	50.7/50.7	60/60
														9.6/8.7	-	60.3/59.4	70/70
														-	3.3/3.0	54.0/53.7	60/60
														9.6/8.7	3.3/3.0	63.6/62.4	70/70
											EH*D-3M15	11.3/15.0	31.3/36.1	-	-	52.7/58.7	60/60
														9.6/8.7	-	64.7/69.6	70/70
														-	3.3/3.0	56.8/62.5	60/70
														9.6/8.7	3.3/3.0	68.8/73.4	70/80
											EH*D-3M20	15.0/20.0	41.7/48.1	-	-	65.7/73.8	70/80
														9.6/8.7	-	77.7/84.6	80/90
														-	3.3/3.0	69.9/77.5	70/80
														9.6/8.7	3.3/3.0	81.9/88.4	90/90
											EH*D-3M30	22.5/30.0	62.5/72.2	-	-	91.8/104	100/110
														9.6/8.7	-	104/115	110/125
														-	3.3/3.0	95.9/108	100/110
														9.6/8.7	3.3/3.0	108/118	110/125
											EH*D-3M45	33.8/45.0	93.8/108	-	-	131/149	150/150
														9.6/8.7	-	143/160	150/175
														-	3.3/3.0	135/153	150/175
														9.6/8.7	3.3/3.0	147/164	150/175
											EH*D-3M60	45.1/60.0	125/144	-	-	170/158	175/175
														9.6/8.7	-	182/169	200/200
														-	3.3/3.0	174/162	175/175
														9.6/8.7	3.3/3.0	186/173	200/200
DRC1204D	460/3/60	2	7.1	52	2	0.33	0.85	Direct Drive Standard Static	2.4	5.4	-	-	-	-	-	23	30
											-	-	-	4.3	-	27.3	30
											-	-	-	-	1	24	30
											-	-	-	4.3	1	28.3	30
											EH*D-4M10	10	12	-	-	23	30
														4.3	-	27.3	30
														-	1	24	30
														4.3	1	28.4	30
											EH*D-4M15	15	18	-	-	29.3	30
														4.3	-	34.7	35
														-	1	30.6	35
														4.3	1	35.9	40
											EH*D-4M20	20	24.1	-	-	36.8	40
														4.3	-	42.2	45
														-	1	38.1	40
														4.3	1	43.4	45
											EH*D-4M30	30	36.1	-	-	51.9	60
														4.3	-	57.2	60
														-	1	53.1	60
														4.3	1	58.5	60
											EH*D-4M45	45	54.1	-	-	74.4	80
														4.3	-	79.8	80
														-	1	75.7	80
														4.3	1	81	90
											EH*D-4M60	60	72.2	-	-	78.9	90
														4.3	-	84.3	90
														-	1	80.2	90
														4.3	1	85.5	90

Electrical Data

Model Number	Electrical Rating	Compressor			Outdoor Fan Motor			Indoor Fan Motor			Optional Electric Heat			Optional Powered Convienience Outlet	Optional Power Exhaust	Power Supply	
		QTY	RLA	LRA	QTY	HP	FLA	Type	HP	FLA	Part #	KW*	FLA	FLA	FLA	MCA	MOP
DRC1204L	460/3/60	2	7.1	52	2	0.33	0.85	Direct Drive Medium Static	3.5	7.2	-	-	-	-	-	24.8	30
											-	-	-	4.3	-	29.1	35
											-	-	-	-	1	25.8	30
											-	-	-	4.3	1	30.1	35
											EH*D-4M10	10	12	-	-	24.8	30
														4.3	-	29.4	35
														-	1	25.8	30
														4.3	1	30.7	35
											EH*D-4M15	15	18	-	-	31.6	35
														4.3	-	36.9	40
														-	1	32.8	35
														4.3	1	38.2	40
											EH*D-4M20	20	24.1	-	-	39.1	40
														4.3	-	44.4	45
														-	1	40.3	45
														4.3	1	45.7	50
											EH*D-4M30	30	36.1	-	-	54.1	60
														4.3	-	59.5	60
														-	1	55.4	60
														4.3	1	60.7	70
											EH*D-4M45	45	54.1	-	-	76.7	80
														4.3	-	82	90
														-	1	77.9	80
														4.3	1	83.3	90
											EH*D-4M60	60	72.2	-	-	81.2	90
														4.3	-	86.5	100
														-	1	82.4	90
														4.3	1	87.8	100
DRC1204W	460/3/60	2	7.1	52	2	0.33	0.85	Direct Drive High Static	3.5	7.2	-	-	-	-	-	24.8	30
											-	-	-	4.3	-	29.1	35
											-	-	-	-	1	25.8	30
											-	-	-	4.3	1	30.1	35
											EH*D-4M10	10	12	-	-	24.8	30
														4.3	-	29.4	35
														-	1	25.8	30
														4.3	1	30.7	35
											EH*D-4M15	15	18	-	-	31.6	35
														4.3	-	36.9	40
														-	1	32.8	35
														4.3	1	38.2	40
											EH*D-4M20	20	24.1	-	-	39.1	40
														4.3	-	44.4	45
														-	1	40.3	45
														4.3	1	45.7	50
											EH*D-4M30	30	36.1	-	-	54.1	60
														4.3	-	59.5	60
														-	1	55.4	60
														4.3	1	60.7	70
											EH*D-4M45	45	54.1	-	-	76.7	80
														4.3	-	82	90
														-	1	77.9	80
														4.3	1	83.3	90
											EH*D-4M60	60	72.2	-	-	81.2	90
														4.3	-	86.5	100
														-	1	82.4	90
														4.3	1	87.8	100

Electrical Data

Model Number	Electrical Rating	Compressor			Outdoor Fan Motor			Indoor Fan Motor			Optional Electric Heat			Optional Powered Convienience Outlet	Optional Power Exhaust	Power Supply	
		QTY	RLA	LRA	QTY	HP	FLA	Type	HP	FLA	Part #	KW*	FLA	FLA	FLA	MCA	MOP
DRC1207D	575/3/60	2	5.1	39.5	2	0.33	0.67	Direct Drive Standard Static	2.4	4	-	-	-	-	-	16.9	20
											-	-	-	3.5	-	20.4	25
											-	-	-	-	1.2	18.1	20
											-	-	-	3.5	1.2	21.6	25
											EH*D-7M10	10	9.62	-	-	17	20
														3.5	-	21.4	25
														-	1.2	18.5	20
														3.5	1.2	22.9	25
											EH*D-7M15	15	14.4	-	-	23	25
														3.5	-	27.4	30
														-	1.2	24.5	25
														3.5	1.2	28.9	30
											EH*D-7M20	20	19.2	-	-	29.1	30
														3.5	-	33.4	35
														-	1.2	30.6	35
														3.5	1.2	34.9	35
											EH*D-7M30	30	28.9	-	-	41.1	45
														3.5	-	45.5	50
														-	1.2	42.6	45
														3.5	1.2	47	50
											EH*D-7M45	45	43.3	-	-	59.1	60
														3.5	-	63.5	70
														-	1.2	60.6	70
														3.5	1.2	65	70
											EH*D-7M60	60	57.7	-	-	62.7	70
														3.5	-	67.1	80
														-	1.2	64.2	70
														3.5	1.2	68.6	80
DRC1207L	575/3/60	2	5.1	39.5	2	0.33	0.67	Direct Drive Medium Static	3.5	5	-	-	-	-	-	17.9	20
											-	-	-	3.5	-	21.4	25
											-	-	-	-	1.2	19.1	20
											-	-	-	3.5	1.2	22.6	25
											EH*D-7M10	10	9.62	-	-	18.3	20
														3.5	-	22.7	25
														-	1.2	19.8	20
														3.5	1.2	24.2	25
											EH*D-7M15	15	14.4	-	-	24.3	25
														3.5	-	28.7	30
														-	1.2	25.8	30
														3.5	1.2	30.2	35
											EH*D-7M20	20	19.2	-	-	30.3	35
														3.5	-	34.7	35
														-	1.2	31.8	35
														3.5	1.2	36.2	40
											EH*D-7M30	30	28.9	-	-	42.3	45
														3.5	-	46.7	50
														-	1.2	43.8	45
														3.5	1.2	48.2	50
											EH*D-7M45	45	43.3	-	-	60.4	70
														3.5	-	64.8	70
														-	1.2	61.9	70
														3.5	1.2	66.3	70
											EH*D-7M60	60	57.7	-	-	64	70
														3.5	-	68.4	80
														-	1.2	65.5	70
														3.5	1.2	69.9	80

Electrical Data

Model Number	Electrical Rating	Compressor			Outdoor Fan Motor			Indoor Fan Motor			Optional Electric Heat			Optional Powered Convienience Outlet	Optional Power Exhaust	Power Supply	
		QTY	RLA	LRA	QTY	HP	FLA	Type	HP	FLA	Part #	KW*	FLA	FLA	FLA	MCA	MOP
DRC1207W	575/3/60	2	5.1	39.5	2	0.33	0.67	Direct Drive High Static	3.5	5	-	-	-	-	-	17.9	20
											-	-	-	3.5	-	21.4	25
											-	-	-	-	1.2	19.1	20
											-	-	-	3.5	1.2	22.6	25
											EH*D-7M10	10	9.62	-	-	18.3	20
														3.5	-	22.7	25
														-	1.2	19.8	20
														3.5	1.2	24.2	25
											EH*D-7M15	15	14.4	-	-	24.3	25
														3.5	-	28.7	30
														-	1.2	25.8	30
														3.5	1.2	30.2	35
											EH*D-7M20	20	19.2	-	-	30.3	35
														3.5	-	34.7	35
														-	1.2	31.8	35
														3.5	1.2	36.2	40
											EH*D-7M30	30	28.9	-	-	42.3	45
														3.5	-	46.7	50
														-	1.2	43.8	45
														3.5	1.2	48.2	50
											EH*D-7M45	45	43.3	-	-	60.4	70
														3.5	-	64.8	70
														-	1.2	61.9	70
														3.5	1.2	66.3	70
											EH*D-7M60	60	57.7	-	-	64	70
														3.5	-	68.4	80
														-	1.2	65.5	70
														3.5	1.2	69.9	80
DRC1503D	208/230/3/60	2	19	123	2	0.33	3.5	Direct Drive Standard Static	3.5	10.9	-	-	-	-	-	60.7/60.7	70/70
											-	-	-	9.6/8.7	-	70.3/69.4	80/80
											-	-	-	-	3.3/3.0	64.0/63.7	70/70
											-	-	-	9.6/8.7	3.3/3.0	73.6/72.4	80/80
											EH*D-3M10	7.51/10.0	20.8/24.1	-	-	60.7/60.7	70/70
														9.6/8.7	-	70.3/69.4	80/80
														-	3.3/3.0	64.0/63.7	70/70
														9.6/8.7	3.3/3.0	73.6/72.4	80/80
											EH*D-3M15	11.3/15.0	31.3/36.1	-	-	60.7/60.7	70/70
														9.6/8.7	-	70.3/69.6	80/80
														-	3.3/3.0	64.0/63.7	70/70
														9.6/8.7	3.3/3.0	73.6/73.4	80/80
											EH*D-3M20	15.0/20.0	41.7/48.1	-	-	65.7/73.8	70/80
														9.6/8.7	-	77.7/84.6	80/90
														-	3.3/3.0	69.9/77.5	70/80
														9.6/8.7	3.3/3.0	81.9/88.4	90/90
											EH*D-3M30	22.5/30.0	62.5/72.2	-	-	91.8/104	100/110
														9.6/8.7	-	104/115	110/125
														-	3.3/3.0	95.9/108	100/110
														9.6/8.7	3.3/3.0	108/118	110/125
											EH*D-3M45	33.8/45.0	93.8/108	-	-	131/149	150/150
														9.6/8.7	-	143/160	150/175
														-	3.3/3.0	135/153	150/175
														9.6/8.7	3.3/3.0	147/164	150/175
											EH*D-3M60	45.1/60.0	125/144	-	-	170/158	175/175
														9.6/8.7	-	182/169	200/200
														-	3.3/3.0	174/162	175/175
														9.6/8.7	3.3/3.0	186/173	200/200

Electrical Data

Model Number	Electrical Rating	Compressor			Outdoor Fan Motor			Indoor Fan Motor			Optional Electric Heat			Optional Powered Convienience Outlet	Optional Power Exhaust	Power Supply	
		QTY	RLA	LRA	QTY	HP	FLA	Type	HP	FLA	Part #	KW*	FLA	FLA	FLA	MCA	MOP
DRC1503L	208/230/3/60	2	19	123	2	0.33	3.5	Direct Drive Medium Static	3.5	10.9	-	-	-	-	-	60.7/60.7	70/70
											-	-	-	9.6/8.7	-	70.3/69.4	80/80
											-	-	-	-	3.3/3.0	64.0/63.7	70/70
											-	-	-	9.6/8.7	3.3/3.0	73.6/72.4	80/80
											EH*D-3M10	7.51/10.0	20.8/24.1	-	-	60.7/60.7	70/70
														9.6/8.7	-	70.3/69.4	80/80
														-	3.3/3.0	64.0/63.7	70/70
														9.6/8.7	3.3/3.0	73.6/72.4	80/80
											EH*D-3M15	11.3/15.0	31.3/36.1	-	-	60.7/60.7	70/70
														9.6/8.7	-	70.3/69.6	80/80
														-	3.3/3.0	64.0/63.7	70/70
														9.6/8.7	3.3/3.0	73.6/73.4	80/80
											EH*D-3M20	15.0/20.0	41.7/48.1	-	-	65.7/73.8	70/80
														9.6/8.7	-	77.7/84.6	80/90
														-	3.3/3.0	69.9/77.5	70/80
														9.6/8.7	3.3/3.0	81.9/88.4	90/90
											EH*D-3M30	22.5/30.0	62.5/72.2	-	-	91.8/104	100/110
														9.6/8.7	-	104/115	110/125
														-	3.3/3.0	95.9/108	100/110
														9.6/8.7	3.3/3.0	108/118	110/125
											EH*D-3M45	33.8/45.0	93.8/108	-	-	131/149	150/150
														9.6/8.7	-	143/160	150/175
														-	3.3/3.0	135/153	150/175
														9.6/8.7	3.3/3.0	147/164	150/175
											EH*D-3M60	45.1/60.0	125/144	-	-	170/158	175/175
														9.6/8.7	-	182/169	200/200
														-	3.3/3.0	174/162	175/175
														9.6/8.7	3.3/3.0	186/173	200/200
DRC1503W	208/230/3/60	2	19	123	2	0.33	3.5	Direct Drive High Static	5	14.5	-	-	-	-	-	64.3/64.3	80/80
											-	-	-	9.6/8.7	-	73.9/73.0	90/90
											-	-	-	-	3.3/3.0	67.6/67.3	80/80
											-	-	-	9.6/8.7	3.3/3.0	77.2/76.0	90/90
											EH*D-3M10	7.51/10.0	20.8/24.1	-	-	64.3/64.3	80/80
														9.6/8.7	-	73.9/73.0	90/90
														-	3.3/3.0	67.6/67.3	80/80
														9.6/8.7	3.3/3.0	77.2/76.0	90/90
											EH*D-3M15	11.3/15.0	31.3/36.1	-	-	64.3/64.3	80/80
														9.6/8.7	-	73.9/74.1	90/90
														-	3.3/3.0	67.6/67.3	80/80
														9.6/8.7	3.3/3.0	77.2/77.9	90/90
											EH*D-3M20	15.0/20.0	41.7/48.1	-	-	70.2/78.3	80/80
														9.6/8.7	-	82.2/89.1	90/90
														-	3.3/3.0	74.4/82.0	80/90
														9.6/8.7	3.3/3.0	86.4/92.9	90/100
											EH*D-3M30	22.5/30.0	62.5/72.2	-	-	96.3/108	100/110
														9.6/8.7	-	108/119	110/125
														-	3.3/3.0	100/112	110/125
														9.6/8.7	3.3/3.0	112/123	125/125
											EH*D-3M45	33.8/45.0	93.8/108	-	-	135/153	150/175
														9.6/8.7	-	147/164	150/175
														-	3.3/3.0	140/157	150/175
														9.6/8.7	3.3/3.0	152/168	175/175
											EH*D-3M60	45.1/60.0	125/144	-	-	174/162	175/200
														9.6/8.7	-	186/173	200/200
														-	3.3/3.0	179/166	200/200
														9.6/8.7	3.3/3.0	191/177	200/200

Electrical Data

Model Number	Electrical Rating	Compressor			Outdoor Fan Motor			Indoor Fan Motor			Optional Electric Heat			Optional Powered Convienience Outlet	Optional Power Exhaust	Power Supply	
		QTY	RLA	LRA	QTY	HP	FLA	Type	HP	FLA	Part #	KW*	FLA	FLA	FLA	MCA	MOP
DRC1504D	460/3/60	2	9.7	62	2	0.33	1.6	Direct Drive Standard Static	3.5	7.2	-	-	-	-	-	32.3	40
											-	-	-	4.3	-	36.6	45
											-	-	-	-	1	33.3	40
											-	-	-	4.3	1	37.6	45
											EH*D-4M10	10	12	-	-	32.3	40
														4.3	-	36.6	45
														-	1	33.3	40
														4.3	1	37.6	45
											EH*D-4M15	15	18	-	-	32.3	40
														4.3	-	36.9	45
														-	1	33.3	40
														4.3	1	38.2	45
											EH*D-4M20	20	24.1	-	-	39.1	40
														4.3	-	44.4	45
														-	1	40.3	45
														4.3	1	45.7	50
											EH*D-4M30	30	36.1	-	-	54.1	60
														4.3	-	59.5	60
														-	1	55.4	60
														4.3	1	60.7	70
											EH*D-4M45	45	54.1	-	-	76.7	80
														4.3	-	82	90
														-	1	77.9	80
														4.3	1	83.3	90
											EH*D-4M60	60	72.2	-	-	81.2	90
														4.3	-	86.5	100
														-	1	82.4	90
														4.3	1	87.8	100
DRC1504L	460/3/60	2	9.7	62	2	0.33	1.6	Direct Drive Medium Static	3.5	7.2	-	-	-	-	-	32.3	40
											-	-	-	4.3	-	36.6	45
											-	-	-	-	1	33.3	40
											-	-	-	4.3	1	37.6	45
											EH*D-4M10	10	12	-	-	32.3	40
														4.3	-	36.6	45
														-	1	33.3	40
														4.3	1	37.6	45
											EH*D-4M15	15	18	-	-	32.3	40
														4.3	-	36.9	45
														-	1	33.3	40
														4.3	1	38.2	45
											EH*D-4M20	20	24.1	-	-	39.1	40
														4.3	-	44.4	45
														-	1	40.3	45
														4.3	1	45.7	50
											EH*D-4M30	30	36.1	-	-	54.1	60
														4.3	-	59.5	60
														-	1	55.4	60
														4.3	1	60.7	70
											EH*D-4M45	45	54.1	-	-	76.7	80
														4.3	-	82	90
														-	1	77.9	80
														4.3	1	83.3	90
											EH*D-4M60	60	72.2	-	-	81.2	90
														4.3	-	86.5	100
														-	1	82.4	90
														4.3	1	87.8	100

Electrical Data

Model Number	Electrical Rating	Compressor			Outdoor Fan Motor			Indoor Fan Motor			Optional Electric Heat			Optional Powered Convienience Outlet	Optional Power Exhaust	Power Supply	
		QTY	RLA	LRA	QTY	HP	FLA	Type	HP	FLA	Part #	KW*	FLA	FLA	FLA	MCA	MOP
DRC1504W	460/3/60	2	9.7	62	2	0.33	1.6	Direct Drive High Static	5	10.6	-	-	-	-	-	35.7	45
											-	-	-	4.3	-	40	45
											-	-	-	-	1	36.7	45
											-	-	-	4.3	1	41	45
											EH*D-4M10	10	12	-	-	35.7	45
														4.3	-	40	45
														-	1	36.7	45
														4.3	1	41	45
											EH*D-4M15	15	18	-	-	35.8	45
														4.3	-	41.2	45
														-	1	37.1	45
														4.3	1	42.4	45
											EH*D-4M20	20	24.1	-	-	43.3	45
														4.3	-	48.7	50
														-	1	44.6	45
														4.3	1	49.9	50
											EH*D-4M30	30	36.1	-	-	58.4	60
														4.3	-	63.7	70
														-	1	59.6	60
														4.3	1	65	70
											EH*D-4M45	45	54.1	-	-	80.9	90
														4.3	-	86.3	90
														-	1	82.2	90
														4.3	1	87.5	90
											EH*D-4M60	60	72.2	-	-	85.4	100
														4.3	-	90.8	100
														-	1	86.7	100
														4.3	1	92	100
DRC1507D	575/3/60	2	7.4	50	2	0.33	3.5	Direct Drive Standard Static	3.5	5	-	-	-	-	-	28.7	35
											-	-	-	3.5	-	32.2	35
											-	-	-	-	1.2	29.9	35
											-	-	-	3.5	1.2	33.4	35
											EH*D-7M10	10	9.62	-	-	28.7	35
														3.5	-	32.2	35
														-	1.2	29.9	35
														3.5	1.2	33.4	35
											EH*D-7M15	15	14.4	-	-	28.7	35
														3.5	-	32.2	35
														-	1.2	29.9	35
														3.5	1.2	33.4	35
											EH*D-7M20	20	19.2	-	-	30.3	35
														3.5	-	34.7	35
														-	1.2	31.8	35
														3.5	1.2	36.2	40
											EH*D-7M30	30	28.9	-	-	42.3	45
														3.5	-	46.7	50
														-	1.2	43.8	45
														3.5	1.2	48.2	50
											EH*D-7M45	45	43.3	-	-	60.4	70
														3.5	-	64.8	70
														-	1.2	61.9	70
														3.5	1.2	66.3	70
											EH*D-7M60	60	57.7	-	-	64	70
														3.5	-	68.4	80
														-	1.2	65.5	70
														3.5	1.2	69.9	80

Electrical Data

Model Number	Electrical Rating	Compressor			Outdoor Fan Motor			Indoor Fan Motor			Optional Electric Heat			Optional Powered Convienience Outlet	Optional Power Exhaust	Power Supply	
		QTY	RLA	LRA	QTY	HP	FLA	Type	HP	FLA	Part #	KW*	FLA	FLA	FLA	MCA	MOP
DRC1507L	575/3/60	2	7.4	50	2	0.33	3.5	Direct Drive Medium Static	3.5	5	-	-	-	-	-	28.7	35
											-	-	-	3.5	-	32.2	35
											-	-	-	-	1.2	29.9	35
											-	-	-	3.5	1.2	33.4	35
											EH*D-7M10	10	9.62	-	-	28.7	35
														3.5	-	32.2	35
														-	1.2	29.9	35
														3.5	1.2	33.4	35
											EH*D-7M15	15	14.4	-	-	28.7	35
														3.5	-	32.2	35
														-	1.2	29.9	35
														3.5	1.2	33.4	35
											EH*D-7M20	20	19.2	-	-	30.3	35
														3.5	-	34.7	35
														-	1.2	31.8	35
														3.5	1.2	36.2	40
											EH*D-7M30	30	28.9	-	-	42.3	45
														3.5	-	46.7	50
														-	1.2	43.8	45
														3.5	1.2	48.2	50
											EH*D-7M45	45	43.3	-	-	60.4	70
														3.5	-	64.8	70
														-	1.2	61.9	70
														3.5	1.2	66.3	70
											EH*D-7M60	60	57.7	-	-	64	70
														3.5	-	68.4	80
														-	1.2	65.5	70
														3.5	1.2	69.9	80
DRC1507W	575/3/60	2	7.4	50	2	0.33	3.5	Direct Drive High Static	5	7.2	-	-	-	-	-	30.9	35
											-	-	-	3.5	-	34.4	40
											-	-	-	-	1.2	32.1	35
											-	-	-	3.5	1.2	35.6	40
											EH*D-7M10	10	9.62	-	-	30.9	35
														3.5	-	34.4	40
														-	1.2	32.1	35
														3.5	1.2	35.6	40
											EH*D-7M15	15	14.4	-	-	30.9	35
														3.5	-	34.4	40
														-	1.2	32.1	35
														3.5	1.2	35.6	40
											EH*D-7M20	20	19.2	-	-	33.1	35
														3.5	-	37.4	40
														-	1.2	34.6	35
														3.5	1.2	38.9	40
											EH*D-7M30	30	28.9	-	-	45.1	50
														3.5	-	49.5	50
														-	1.2	46.6	50
														3.5	1.2	51	60
											EH*D-7M45	45	43.3	-	-	63.1	70
														3.5	-	67.5	70
														-	1.2	64.6	70
														3.5	1.2	69	70
											EH*D-7M60	60	57.7	-	-	66.7	80
														3.5	-	71.1	80
														-	1.2	68.2	80
														3.5	1.2	72.6	80

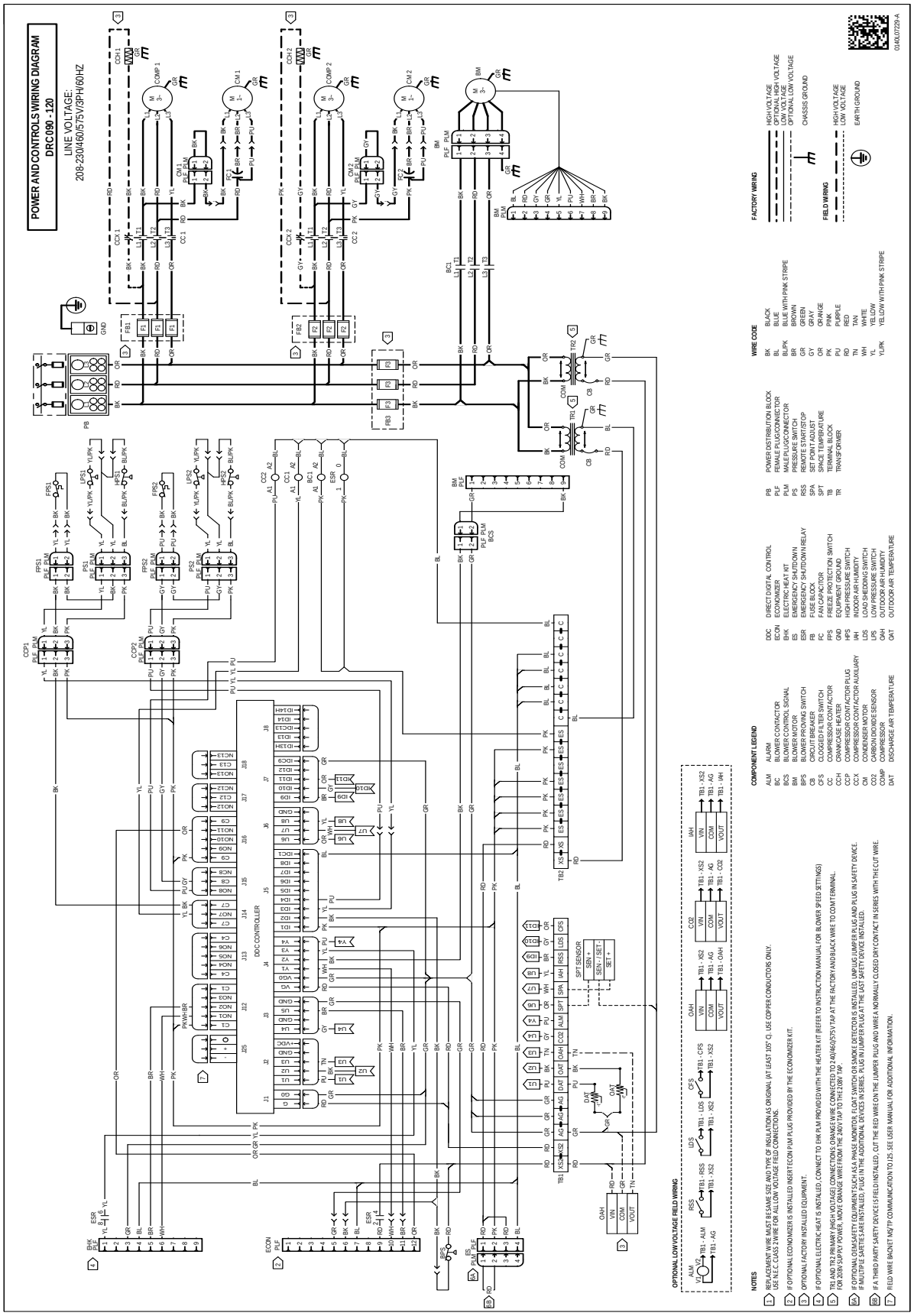

WARNING

High Voltage: Disconnect all power before servicing or installing this unit. Multiple power sources may be present. Failure to do so may cause property damage, personal injury, or death.

Wiring is subject to change. Always refer to the wiring diagram on the unit for the most up-to-date wiring.

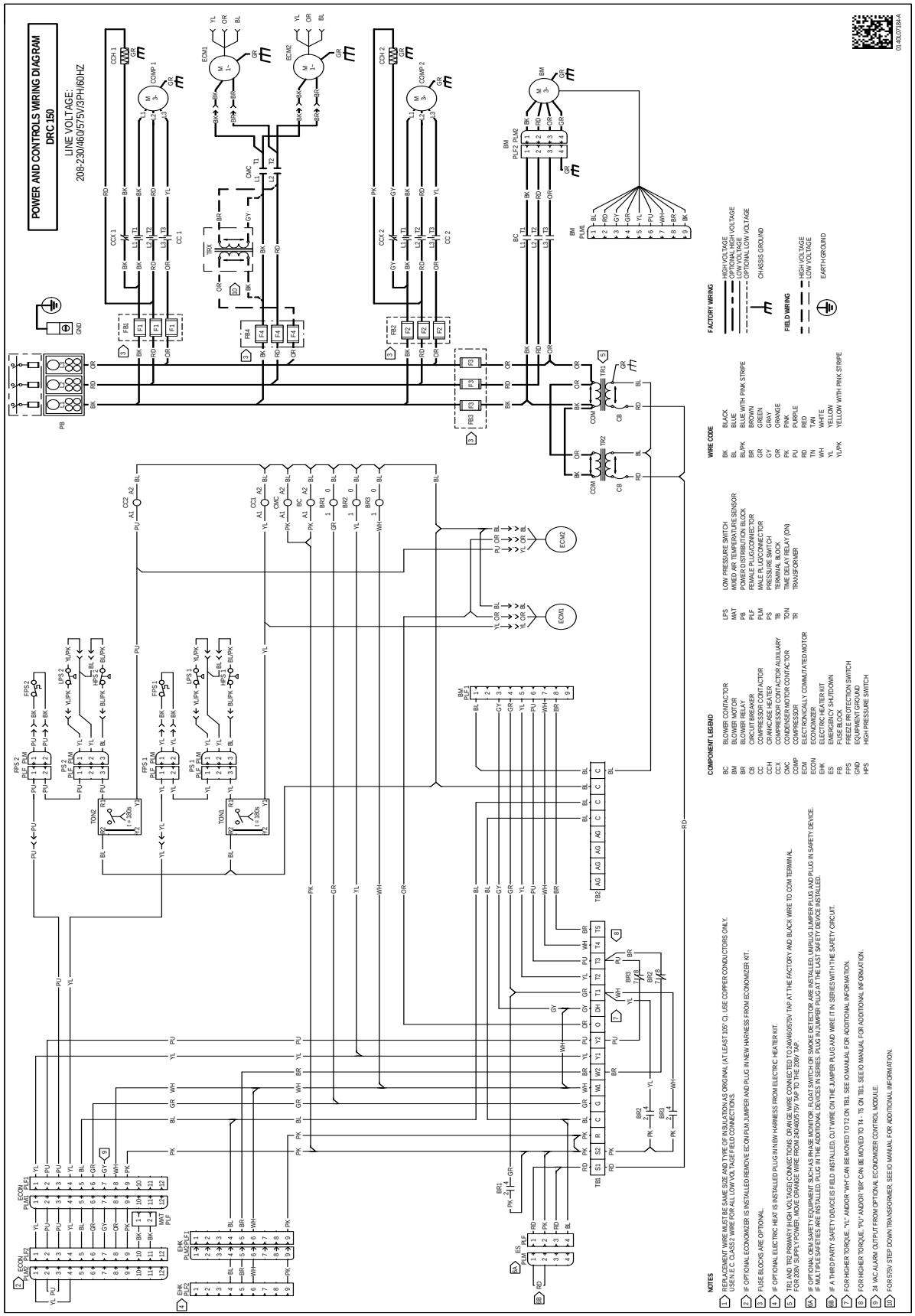

Wiring is subject to change. Always refer to the wiring diagram on the unit for the most up-to-date wiring.

WARNING

High Voltage: Disconnect all power before servicing or installing this unit. Multiple power sources may be present. Failure to do so may cause property damage, personal injury, or death.

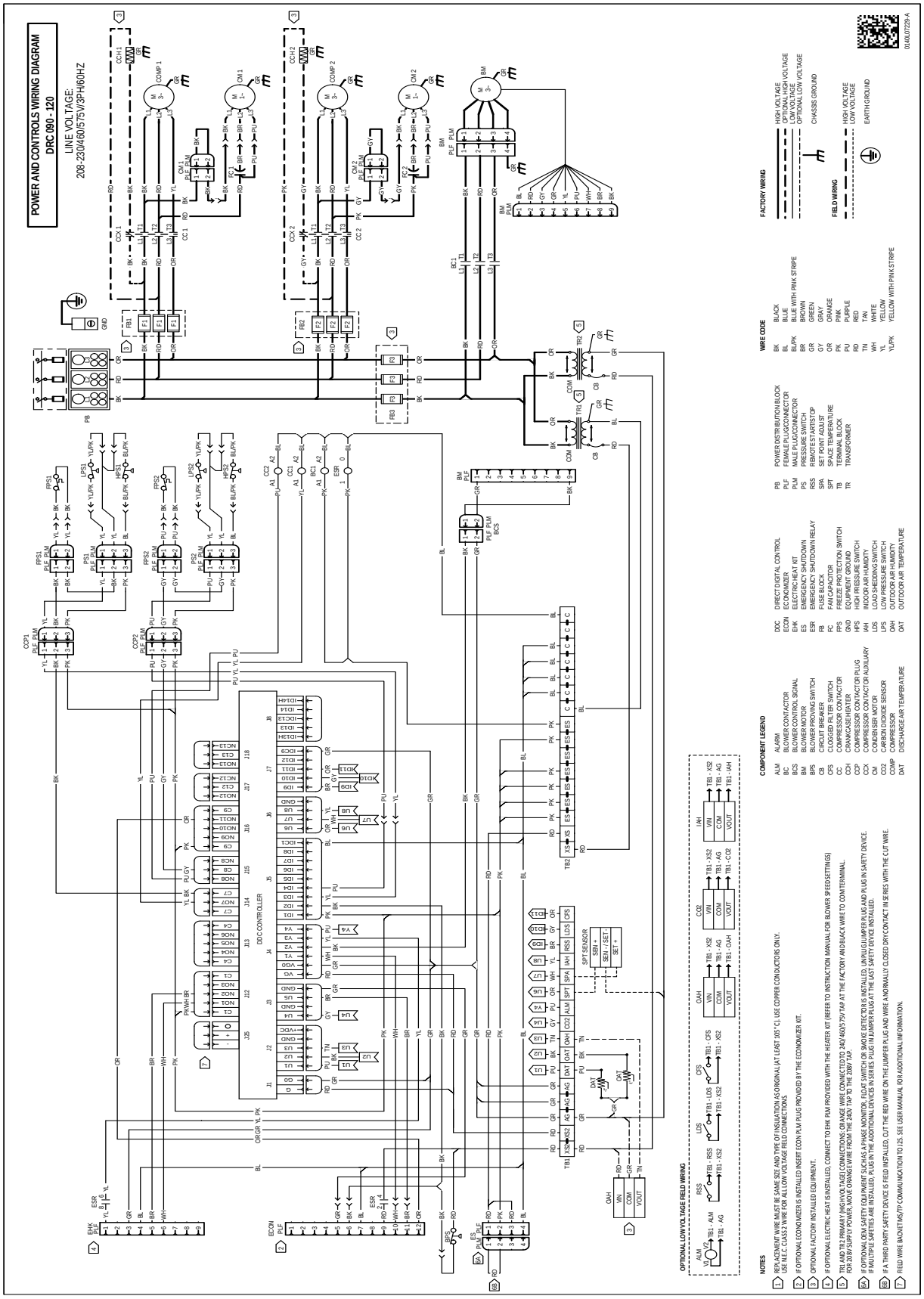

WARNING

High Voltage: Disconnect all power before servicing or installing this unit. Multiple power sources may be present. Failure to do so may cause property damage, personal injury, or death.

Wiring is subject to change. Always refer to the wiring diagram on the unit for the most up-to-date wiring.

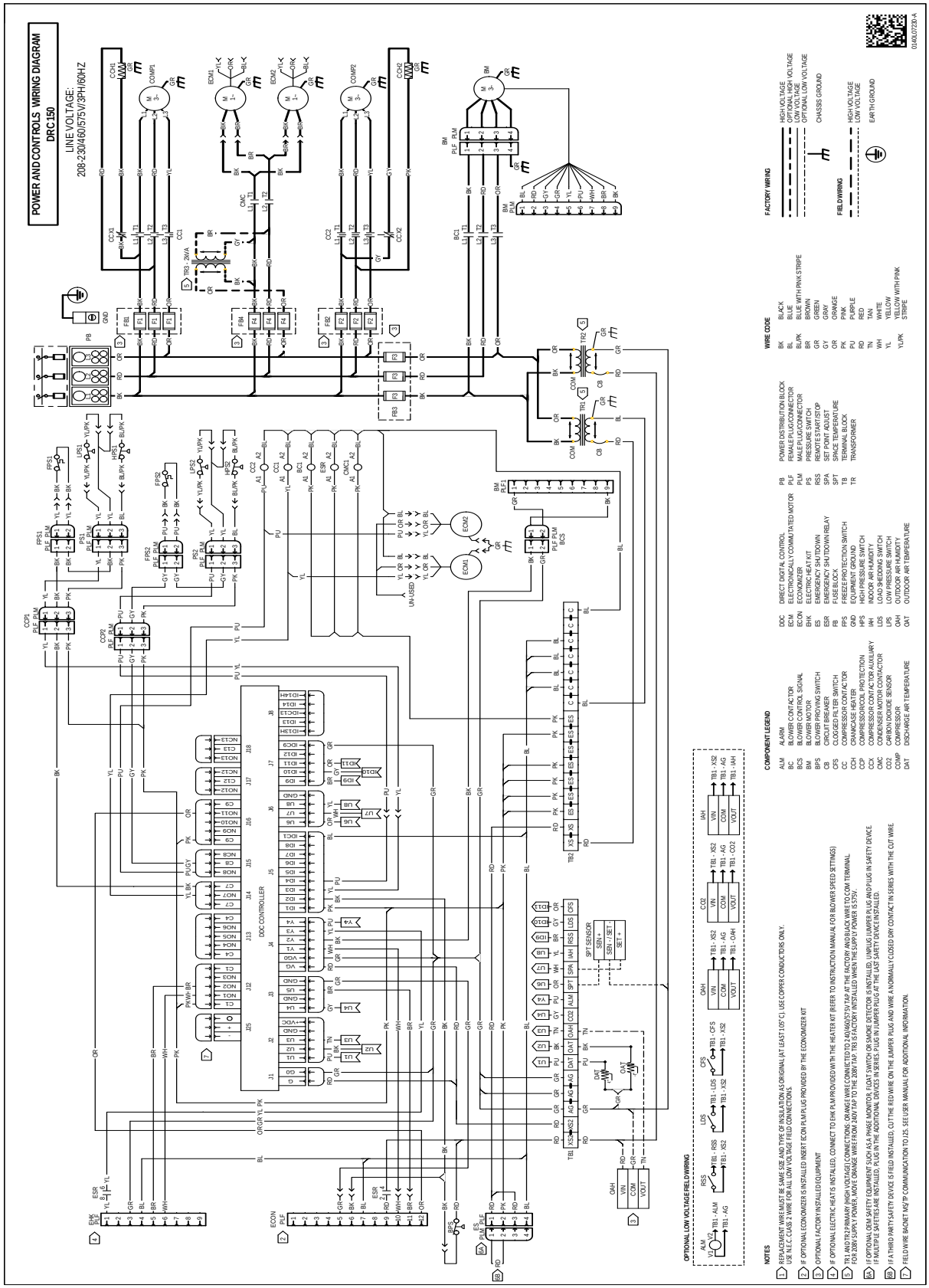

WARNING

High Voltage: Disconnect all power before servicing or installing this unit. Multiple power sources may be present. Failure to do so may cause property damage, personal injury, or death.

Wiring is subject to change. Always refer to the wiring diagram on the unit for the most up-to-date wiring.

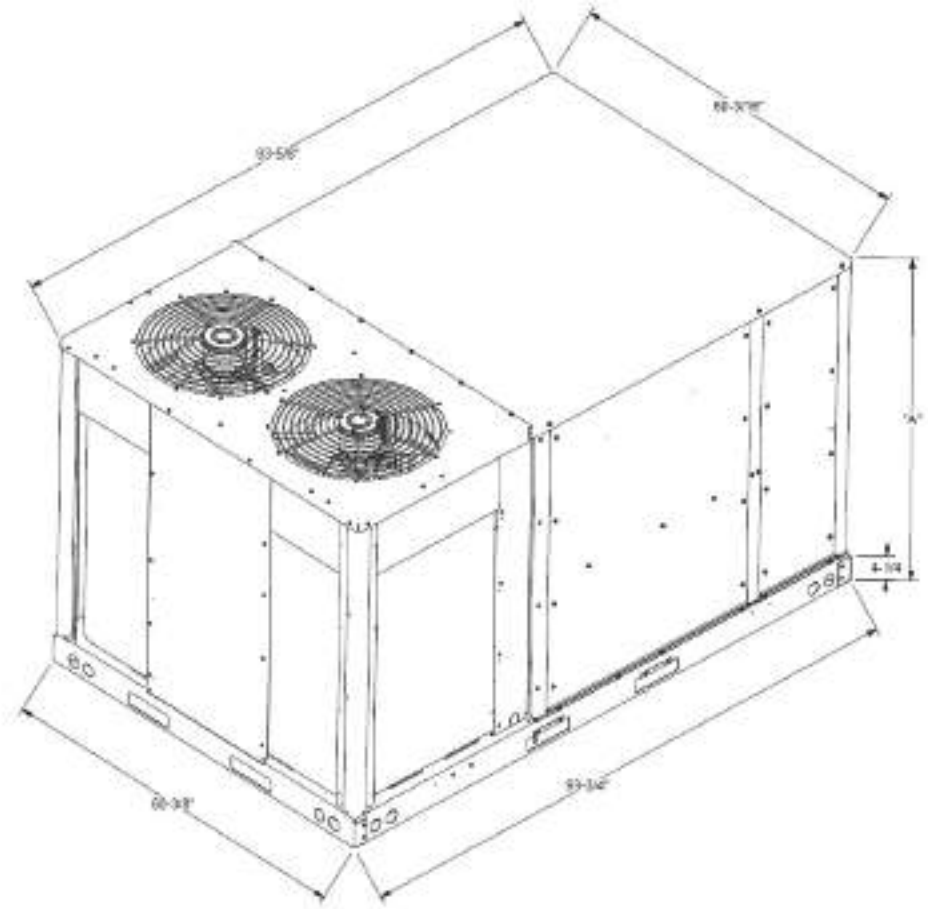

Model Size	DIM "A"
7½ TON AC	54 9/20
8½ TON AC	54 9/20
10 TON AC	54 9/20
12½ TON AC	58 3/5

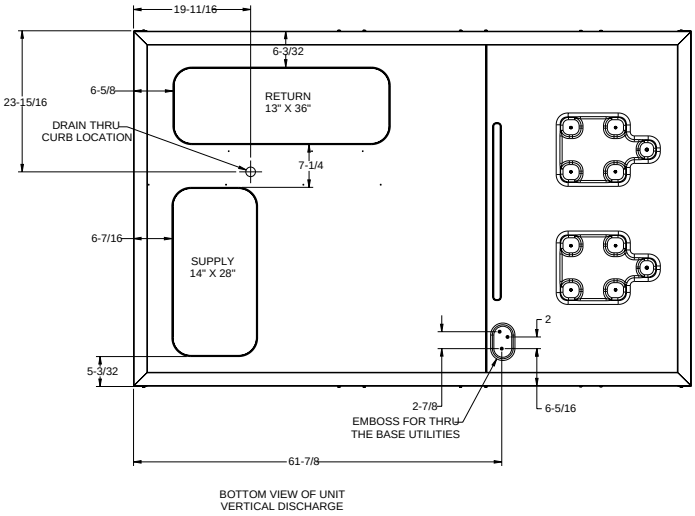

BOTTOM VIEW OF UNIT

VERTICAL DISCHARGE

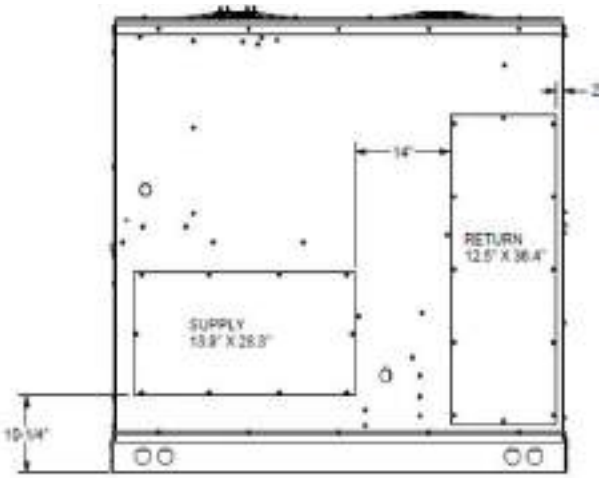

HORIZONTAL DISCHARGE

Electrical Connections

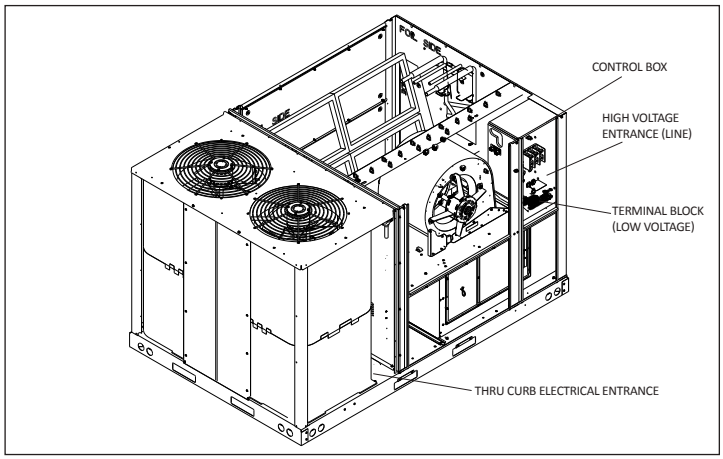

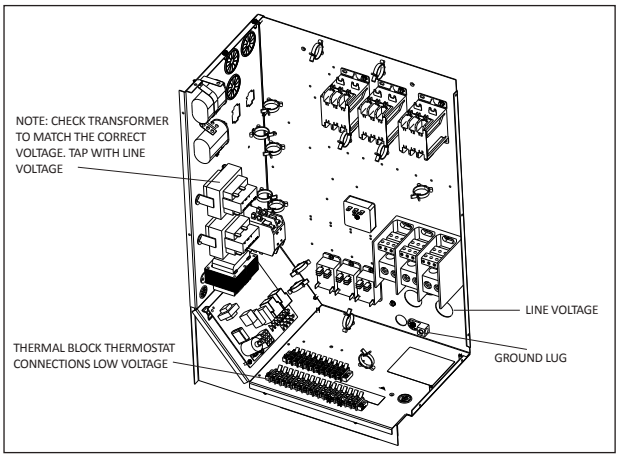

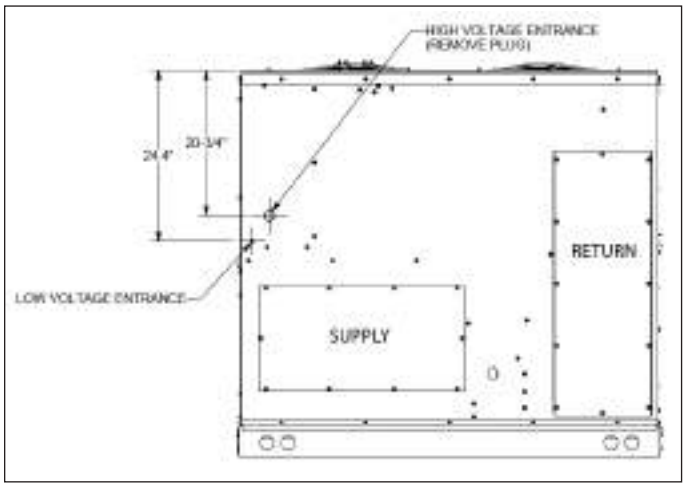

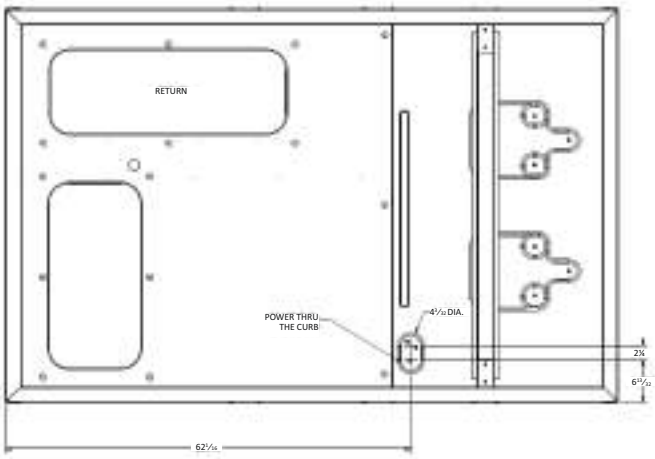

Unit Clearances

Service Clearance

Allow for recommended service clearances as shown in figure to the right. In situations that have multiple units, a 36" minimum clearance is required between the condenser coils. A clearance of 48" is recommended on all sides of the unit to allow service access and to ensure proper ventilation and condenser airflow. The top of the unit should be unobstructed. Provide a roof walkway along the sides of the unit for service and access to controls and components. Contact your Daikin sales representative for service requirements less than those recommended.

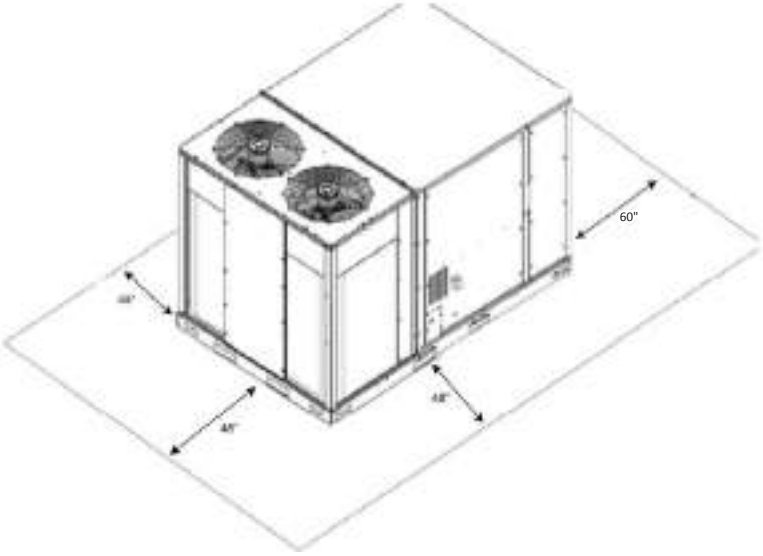

Unit Location

The structural engineer must verify that the roof has adequate support and ability to minimize deflection. Take extreme caution when using on a wooden roof structure. Unit condenser coils should be in a location that avoids any heated exhaust air.

Allow sufficient space around the unit for maintenance/service clearance. Consult your Daikin sales representative if available clearances do not meet minimum recommendations.

Where code considerations, such as the NEC, require extended clearances, these take precedence.

Provisions for forks have been included in the unit base frame. No other fork locations are approved.

» Unit must be lifted by the four lifting holes located at the base frame corners.

» Lifting cables should be attached to the unit with shackles.

» The distance between the crane hook and the top of the unit must not be less than 60".

» Two spreader bars must span over the unit to prevent damage to the cabinet by the lift cables. Spreader bars must be of sufficient length so that cables do not come in contact with the unit during transport. Remove wood struts mounted beneath unit base frame before setting unit on roof curb. These struts are intended to protect unit base frame from fork lift damage. To remove the struts, extract the sheet metal retainers and pull the struts through the base of the unit. Refer to rigging label on the unit.

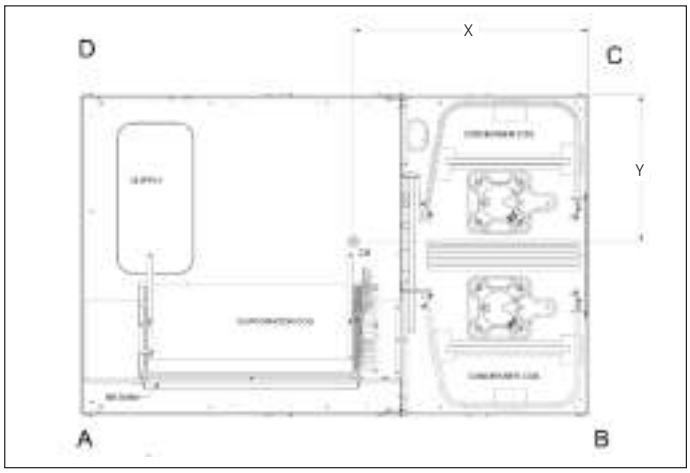

Corner & Center-of-Gravity Locations

Important: If using bottom discharge with roof curb, ductwork should be attached to the curb prior to installing the unit. Refer to the Roof Curb Installation Instructions for proper curb installation. Curbing must be installed in compliance with the National Roofing Contractors Association Manual. Lower unit carefully onto roof mounting curb. While rigging the unit, the center of gravity will cause the condenser end to be lower than the supply air end. Bring condenser end of unit into alignment with the curb. With condenser end of the unit resting on curb member and using curb as a fulcrum, lower opposite end of the unit until entire unit is seated on the curb. When a rectangular cantilever curb is used, take care to center the unit. Check for proper alignment and orientation of supply and return openings with duct.

Roof Curb Installation

The roof curb is field-assembled and must be installed level (within 1/16" per foot side to side). A sub-base must be constructed by the contractor in applications involving pitched roofs. Gaskets are furnished and must be installed between the unit and curb. For proper installation, follow NRCA guidelines. In applications requiring post and rail installation, an I-beam securely mounted on multiple posts should support the unit on each side. In addition, the insulation on the underside of the unit should be protected from the elements. Applications in geographic areas subjected to seismic or hurricane conditions must meet code requirements for fastening the unit to the curb and the curb to the building structure. For further and more detailed information please refer to our Daikin Light Commercial Packaged unit IOD.

Weights

Model	Shipping Weight (lbs)	Operating Weight (lbs)	Corner Weights (lbs)				Length	Width
			A	B	C	D	X (in)	Y (in)
DRC090	1087	1162	45	32	259	310	254	264
DRC102	1098	1173	45	31	294	281	243	280
DRC120	1117	1192	45	31	278	298	263	278
DRC150	1195	1270	45	31	283	341	302	269

For details on accessories refer to document **PM-LC-ACCESSORIES**

Notes

Notes

Notes

Our continuing commitment to quality products may mean a change in specifications without notice.
© 2021 **DAIKIN MANUFACTURING COMPANY, L.P.** • Houston, Texas • Printed in the USA.