First Co.®

eco series
COOL-PAK

Space Constrained Air Conditioner



Straight Cool with Electric Heating

3/4 - 2.5 tons

3 - 10 kW Electric Heat

11.7 SEER2

INTERTEK ETL LISTED C US

AHRI CERTIFIED® www.ahridirectory.org
Unitary Small AC
AHRI Standard 210/240
Certification applies only when the complete system is listed with AHRI.

Nomenclature

E C E 24 2 05 B 0 0 B0 00 F

SERIES
E - Eco Series

UNIT TYPE
C - Cooling Only

HEAT TYPE
E - Electric Heat

NOMINAL COOLING CAPACITY
09 - 9,000 Btu/H
12 - 12,000 Btu/H
18 - 18,000 Btu/H
24 - 24,000 Btu/H
30 - 30,000 Btu/H

VOLTAGE
2 - 208/230V 1Ph

HEAT TYPE / SIZE
03 - 3 kW
05 - 5 kW
07 - 7 kW
10 - 10 kW

MAJOR REVISION
B - R410A SEER2 / HSPF2

ACCESSORY CONNECTIONS
0 - Standard

CONTROLS OPTIONS
0 - Standard

CABINET / INSULATION
A0 - 20x20 w/ Fiberglass
B0 - 20x26 w/ Fiberglass

OPTIONS
00 - None

BRAND
F - First Co.
A - AE-Air

PRODUCT DESCRIPTION

- Space constrained electric cooling and electric heating
- Pre-wired and pre-charged with R410a refrigerant, capable of delivering conditioned air to multiple rooms
- Easily installs into a closet or mechanical room on an exterior wall, utilizing a minimal amount of floor space
- Controlled by a standard low voltage thermostat with high and low temperature limits

APPLICATIONS

Hospitality, Apartments/Condominiums, Assisted Living/Memory Care, Student Housing, Senior Living and Modular/Prefabricated Buildings

STANDARD FEATURES

- Shipped ready for top supply and front return (with optional ducted return)
- Insulated compartment to improve cooling performance, reduce noise, and prevent sweating
- ECM indoor blower & outdoor fan motor to provide precise airflow selection and improve system efficiency
- High-efficiency single stage scroll and rotary compressors with double isolated compressor mount to lower compressor noise and vibration
- Larger evaporator coil with low face velocity for improved cooling performance
- Drain pan with corrosion resistant coating to drain condensate in cooling and heating operations
- Thermal expansion valve (TXV) for both cooling and heating to optimize performance
- High and low pressure switch protection
- Electric heat with automatic reset limit switch and non-resettable fuse link
- Filter brackets and disposable filter shipped with unit for field installation; no tool needed to replace filter
- Multi-function microprocessor control board
- Make up air vent when fully opened allows up to 50 cfm of ventilation air to be introduced into the closet

SERVICEABILITY FEATURES

- Easy access for in-place service of most components
- Pullout service switch for service and maintenance convenience
- All electrical components and control boards are serviceable from front of the unit

WARRANTY

Five (5) year limited warranty on compressor and parts.

REQUIRED ACCESSORIES

- Weight bearing wall sleeves for various wall thicknesses from 5” to 20” shipped with weather and debris guard
- Wall sleeves have primary condensate drain connection with secondary overflow to building exterior
- Flush type aluminum louver with finish and paint options
- Standard low voltage heat pump thermostat with high and low temperature limits

OPTIONAL ACCESSORIES

- Interior Access Panels - Louvered or Solid
- Wall sleeves with side access

STANDARD PAINT COLORS:



STANDARD UNIT FEATURES:

FILTER RACK

- Filter Brackets and a disposable filter ship with each unit to be field installed over the evaporator coil.
- NOTE: Do not use filters which will cause the total external static pressure, including ducts, louvers, registers, and filters to exceed 0.5 in. H_2O

MULTI-FUNCTION MICROPROCESSOR CONTROL BOARD

Evaporator coil low temperature protection – During the cooling mode, should the evaporator coil experience either a low temperature condition that could result in ice buildup on the coil or a reduced air flow situation, a temperature sensor attached to the coil will de-energize the unit. The sensor will re-energize the unit when the coil warms back up.

Random restart – When power is turned on after a power outage, a built-in random restart of 3-4 minutes, which prevents all compressors from restarting simultaneously.

Compressor restart delay – This delay ensures that system pressures are allowed to equalize before a compressor restart, which extends compressor life.

Fan delay – A fan delay allows the evaporator blower to continue running for up to 45 seconds after the thermostat is satisfied, which maximizes cooling performance.

Low voltage fuse protection - Disconnects the live circuit when the current exceeds a predetermined value.

VENTILATION AIR

One end of a 3” aluminum vent pipe is connected to the condenser venturi and the other end is connected to the side of the cabinet. A mesh screen and a metal plate on the side of the cabinet covers the opening of the vent pipe.

Up to 50 CFM of ventilation air is introduced into the equipment closet by removing the metal cover plate. The ventilation air mixes with the return air and is then pulled through the evaporator coil and into the supply duct. The cover plate can be reinstalled to partially close the ventilation air opening if less than 50 CFM is desired. An external source of negative pressure (i.e. a bathroom fan) could be used to introduce more than 50 CFM of ventilation air. Consult with factory for further details.

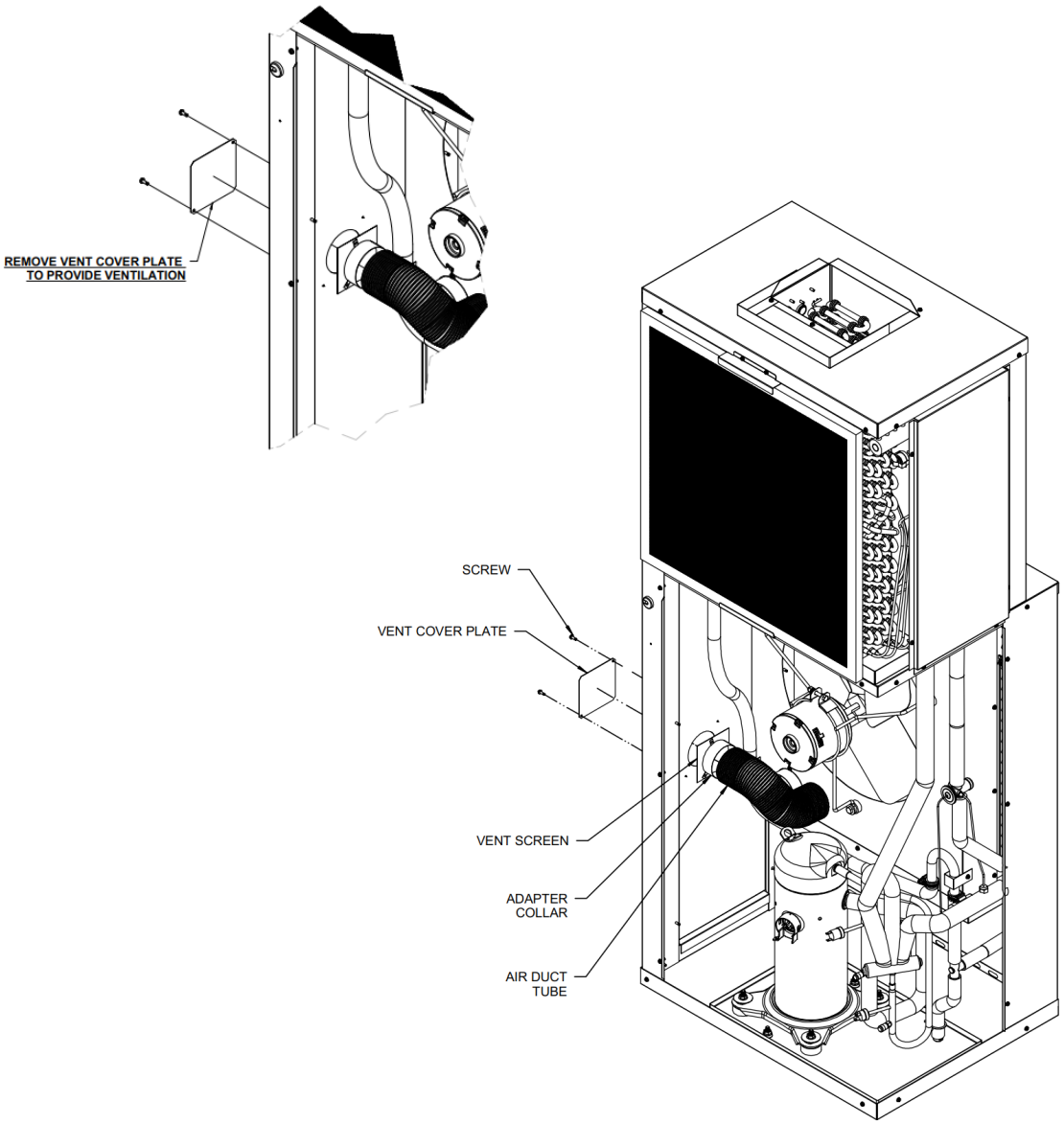

CONDENSATE SYSTEM

Primary Condensate

Factory installed drain line connects the evaporator drain pan to a vertical pipe connection in the unit base pan. Evaporator condensate is delivered from the unit to a catch tray in the wall sleeve and exits the sleeve through the 3/4" male NPT fitting. This design allows the plumber to completely pipe the drain to a condensate riser during the rough-in stage, thus eliminating condensate connection problems usually encountered when trying to connect the HVAC drain to the riser after the HVAC unit is installed in the closet. This features also allows the unit to be removed for service without disconnecting the condensate piping. This configuration does not require any additional closet space to make the drain connection, as do some competitive products.

Secondary Condensate Overflow

If for any reason, the primary condensate riser becomes clogged, water will fill the catch tray and then be diverted through the sleeve to the exterior of the building, rather than be allowed to overflow into the closet or living area. Rain water entering the sleeve is automatically diverted to the 3/4" condensate drain.

REQUIRED ACCESSORIES:

WALL SLEEVES

- Provided for installation during rough-in and when ready the unit is simply slid into the wall sleeve and connected to the ductwork and electrical.
- Weight bearing sleeve that supports the entire weight of the unit and provides a weather tight seal against wind and water infiltration.
- Four wall sleeve depths are available to accommodate wall thickness from 5" to 20".
- Includes a weather guard to cover the sleeve opening and a debris guard to cover wall sleeve base and drain during construction.

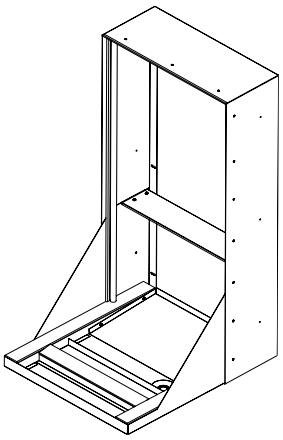

Standard Sleeve for 3/4 - 1.5 tons

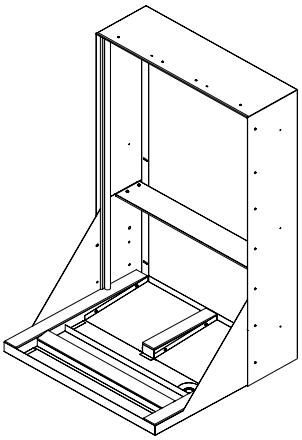

Standard Sleeve for 2.0 - 2.5 tons

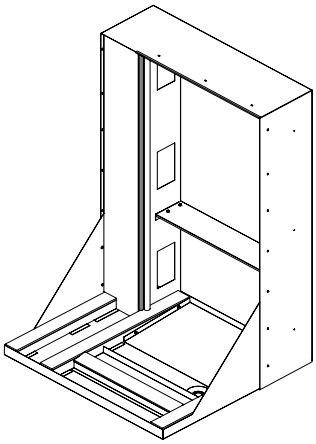

Oversized Sleeve for 3/4 - 1.5 tons to provide uniform exterior appearance

ACCESSORIES

SLEEVE AND LOUVER ACCESSORIES						
ACCESSORY	DESCRIPTION	DIMENSIONS (H x W x D)	STANDARD SLEEVES		SHIP WT. (EA) Lbs.	
			REAR INSTALL[1]	SIDE INSTALL[2]	REAR[5]	SIDE[5]
SMALL CABINET "A" WALL SLEEVES	For 5" - 8" thick walls	43-3/4 x 21-3/8 x 26	936-1B	936-11B	59	64
	For 8" - 12" thick walls	43-3/4 x 21-3/8 x 30	936-2B	936-12B	63	73
	For 12" - 15" thick walls	43-3/4 x 21-3/8 x 33	936-3B	936-13B	68	73
	For 15" - 20" thick walls	43-3/4 x 21-3/8 x 38	936-4B	936-14B	75	80
LARGE CABINET "B" WALL SLEEVES	For 5" - 8" thick walls	43-3/4 x 27-3/8 x 26	985-1B	985-11B	63	68
	For 8" - 12" thick walls	43-3/4 x 27-3/8 x 30	985-2B	985-12B	68	73
	For 12" - 15" thick walls	43-3/4 x 27-3/8 x 33	985-3B	985-13B	75	80
	For 15" - 20" thick walls	43-3/4 x 27-3/8 x 38	985-4B	985-14B	79	84
SMALL CABINET "A" LARGE WALL SLEEVES WITH BLOCKOFF	For 5" - 8" thick walls	43-3/4 x 27-3/8 x 26	986-1B	986-11B	63	68
	For 8" - 12" thick walls	43-3/4 x 27-3/8 x 30	986-2B	986-12B	68	73
	For 12" - 15" thick walls	43-3/4 x 27-3/8 x 33	986-3B	986-13B	75	80
	For 15" - 20" thick walls	43-3/4 x 27-3/8 x 38	986-4B	986-14B	79	84
STANDARD LOUVERS CABINET "A" WALL SLEEVES	Custom Painting	44x22	G205S		12	
	For Field Painting	44x22	G205PPA		12	
	Anodized Aluminum	44x22	G205A		12	
STANDARD LOUVERS CABINET "B" LARGE WALL SLEEVES	Custom Painting	44x28	G216S		18	
	For Field Painting	44x28	G216PPA		18	
	Anodized Aluminum	44x28	G216A		18	

NOTES:

1. Rear install application provides better access to the unit and is recommended over side install wherever possible
2. Side install application requires different closet size and configuration. Contact factory for further information
3. Wind resistant sleeves require the usage of a wind resistant louver
4. S indicates custom color, to be provided by customer. Minimum order quantity is 15 per color, if less than 15 set up fees will be applied
5. All wall sleeves are shipped two (2) per carton, fully assembled.

ACCESSORIES (CONTINUED)

THERMOSTATS			
Heat Pump (24V) Digital w/emergency heat cool - off - heat, auto - on w/limits-(6-wire)	4 x 5 (Horizontal)	**T1220NC**	
Programmable (5-2) St. Cool/Ht. Pump (24V) cool-off-heat, auto-on w/em. Ht. & limits (6-wire)	4 x 5 (Horizontal)	**T2220NC**	
Straight Cool or Heat Pump (24V) Digital Occupancy Sensor	4.3 x 5.7 (Horizontal)	**T8532**	

OPTIONAL ACCESSORIES (Field Installed)						
COMPONENT	**DESCRIPTION**	**DIMENSIONS (H X W)**		**PART NUMBER**	**SHIP WT.**	**COMES W/ FILTER**
ACCESS / RETURN AIR PANEL (3)(4)		FRAME	OPENING		55	
	LOUVERED (1)	87 X 31	84 X 28	**931-11**		20 x 24 x 1
	NON-LOUVERED (2)	87 X 31	84 X 28	**931-12**		NO
	LOUVERED (1)	82 X 31	79 X 28	**931-13**		20 x 24 x 1
	NON-LOUVERED (2)	82 X 31	79 X 28	**931-14**		NO
ACCESS / RETURN AIR PANEL (3)(4)		FRAME	OPENING			
	LOUVERED (1)	87 X 37	84 X 34	**931-15**		20 x 24 x 1
	NON-LOUVERED (2)	87 X 37	84 X 34	**931-16**		NO
	LOUVERED (1)	82 X 37	79 X 34	**931-17**		20 x 24 x 1
	NON-LOUVERED (2)	82 X 37	79 X 34	**931-18**		NO
9-18 INSULATION KIT	5/8" DUCTBOARD	N/A		**91K01**	---	---
24 INSULATION KIT				**91K02**	---	---

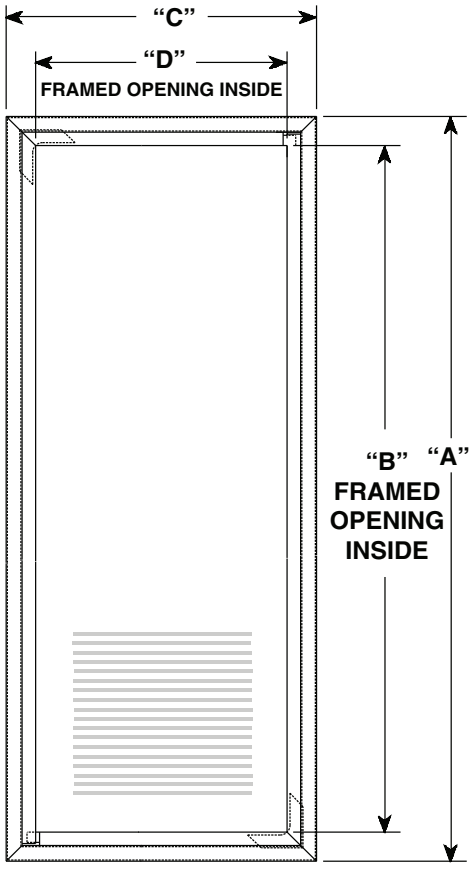

	PART NO.	"A"	"B"	"C"	"D"
	931-11(12)	87.00	84.00	31.00	28.00
	931-13(14)	82.00	79.00	31.00	28.00
*	931-15(16)	87.00	84.00	37.00	34.00
*	931-17(18)	82.00	79.00	37.00	34.00

*** For rear installation use with size 24 or 30**

NOTE: A solid door or panel with a side wall return air louver will result in lower sound levels.

NOTES:

(1) Includes 18 x 24 x 1 or 20 x 24 x 1 filter.
(2) Requires external return air louver and unit mount filter.
(3) Both panels are insulated for sound reduction and have tamperproof screws.
(4) Panels are shipped ten per carton.

PHYSICAL DATA

Unit Dimensions

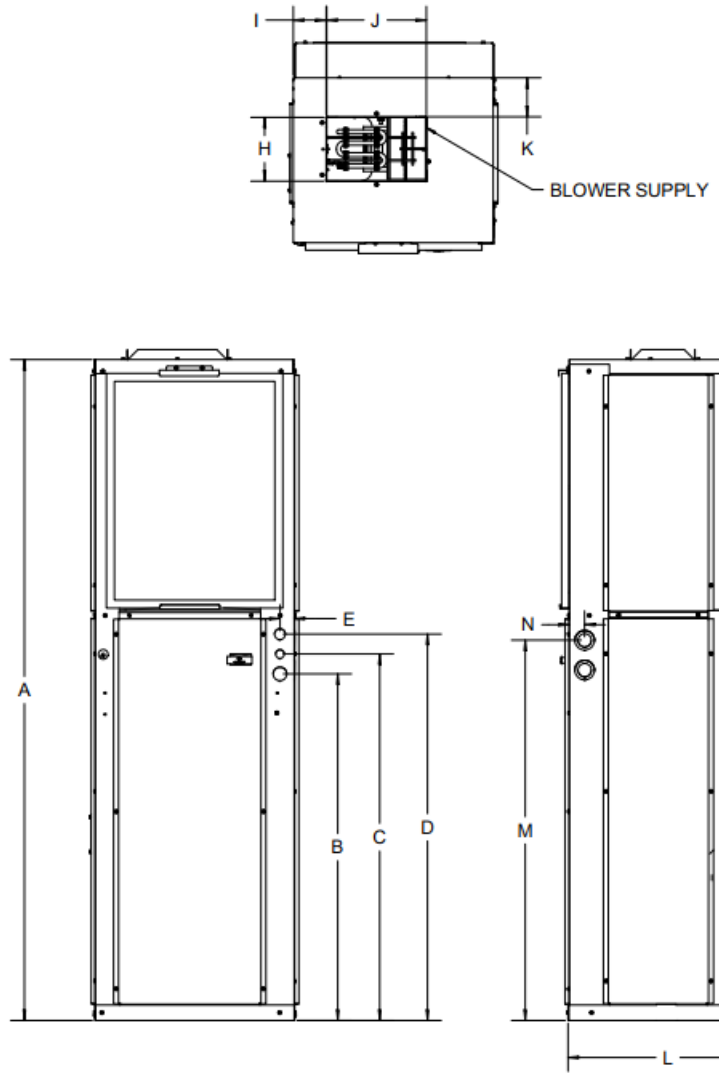

MODEL NUMBER	A	B	C	D	E	F	G	H	I	J	K	L	M	N
	CABINET DIMENSIONS							SUPPLY CONNECTIONS						
ECE09*B**	66.5	34.9	36.9	38.9	1.4	23.6	20.9	6.4	3.3	10.0	3.9	20.1	38.2	1.6
ECE12*B**	66.5	34.9	36.9	38.9	1.4	23.6	20.9	6.4	3.3	10.0	3.9	20.1	38.2	1.6
ECE18*B**	66.5	34.9	36.9	38.9	1.4	23.6	20.9	6.4	3.3	10.0	3.9	20.1	38.2	1.6
ECE24*B**	66.5	34.9	36.9	38.9	1.4	23.7	26.9	10.0	7.9	10.0	3.9	20.1	38.2	1.6
ECE30*B**	66.5	34.9	36.9	38.9	1.4	23.7	26.9	10.0	7.9	10.0	3.9	20.1	38.2	1.6

BLOWER PERFORMANCE:

MODEL NUMBER	MOTOR TAP	in. H_2O STATIC PRESSURE									
		0.10		0.20		0.30		0.40		0.50	
		SCFM	WATTS	SCFM	WATTS	SCFM	WATTS	SCFM	WATTS	SCFM	WATTS
ECE09203	T1[H]	308	45	290	47	272	48	254	48	235	47
	T2[C]	352	58	334	60	316	60	298	60	279	60
	T3	453	95	435	97	417	98	399	98	380	98
ECE12203	T1[H]	317	51	300	49	281	49	263	49	244	48
	T2[C]	453	100	436	99	417	99	398	98	380	97
	T3	510	128	493	127	474	127	456	126	437	125
ECE12205	T1[H]	441	95	424	94	405	94	386	93	368	92
	T2[C]	453	100	436	99	417	99	398	98	380	97
	T3	510	128	493	127	474	127	456	126	437	125
ECE182203	T1[H]	392	47	366	47	343	47	311	43	267	35
	T2[C]	723	155	696	155	673	155	641	151	598	143
	T3	820	206	793	206	770	206	738	202	695	194
ECE182205	T1[H]	502	66	476	65	452	66	420	62	377	54
	T2[C]	723	155	696	155	673	155	641	151	598	143
	T3	820	206	793	206	770	206	738	202	695	194
ECE182207	T1[H]	683	135	656	135	633	136	601	132	558	123
	T2[C]	723	155	696	155	673	155	641	151	598	143
	T3	820	206	793	206	770	206	738	202	695	194
ECE182210	T1[H]	820	206	793	206	770	206	738	202	695	194
	T2[C]	723	155	696	155	673	155	641	151	598	143
	T3	820	206	793	206	770	206	738	202	695	194
ECE24205	T1[H]	511	67	481	67	450	66	417	63	378	59
	T2[C]	788	167	758	167	727	166	694	163	656	159
	T3	883	222	853	222	822	220	789	218	751	213
ECE24207	T1[H]	694	125	663	125	632	124	599	121	561	117
	T2[C]	788	167	758	167	727	166	694	163	656	159
	T3	883	222	853	222	822	220	789	218	751	213
ECE24210	T1[H]	829	188	799	189	768	187	735	185	696	180
	T2[C]	788	167	758	167	727	166	694	163	656	159
	T3	883	222	853	222	822	220	789	218	751	213
ECE30205	T1[H]	546	84	516	78	481	70	442	62	400	52
	T2[C]	894	233	864	226	830	218	790	210	748	200
	T3	983	297	953	290	918	282	879	274	837	264
ECE30207	T1[H]	699	128	669	122	635	114	595	105	553	95
	T2[C]	894	233	864	226	830	218	790	210	748	200
	T3	983	297	953	290	918	282	879	274	837	264
ECE30210	T1[H]	832	194	802	188	767	180	728	171	686	161
	T2[C]	894	233	864	226	830	218	790	210	748	200
	T3	983	297	953	290	918	282	879	274	837	264

[C] Factory Default Cooling and Heat Pump Airflow
[H] Factory Default Electric Heat Airflow
T3 is reserved for high static operation
Blower performance data based on a dry coil at 70°F DB EAT with a standard 1" clean air filter

Data is subject to change. Please verify most current information on www.firstco.com or www.AE-Air.com websites.

RATED COOLING & HEATING PERFORMANCE:

MODEL NUMBER	Rated Airflow SCFM	Cooling Capacity 95°F, BTUH	EER2 95°F	SEER2
EC*092B**	300	9000	10.5	11.7
EC*122B**	390	11500	10.5	11.7
EC*182B**	620	17500	10.5	11.7
EC*242B**	780	23000	10.0	11.7
EC*302B**	800	27200	10.5	11.7

All units tested in accordance with AHRI 210/240 2023 (SEER2)
Ratings subject to change
For up to date rating see AHRI website www.AHRInet.org

EXTENDED PERFORMANCE DATA:

MODEL NUMBER	Indoor Temp DB/WB	Airflow	Outdoor Temperature °F								
			65.0			75.0			85.0		
			BTU/H	S/T	kW	BTU/H	S/T	kW	BTU/H	S/T	kW
ECE09	75/57	300	9050	1.00	0.7	8700	1.00	0.7	8300	1.00	0.8
	75/63		10150	0.76	0.7	9650	0.78	0.7	9100	0.79	0.8
	80/67		11000	0.73	0.7	10500	0.74	0.7	9950	0.76	0.8
	85/72		12250	0.65	0.7	11650	0.66	0.7	11100	0.68	0.8
ECE12	75/57	390	12450	1.00	0.8	11600	1.00	0.9	11050	1.00	1.0
	75/63		13250	0.75	0.8	12550	0.77	0.9	11800	0.79	1.0
	80/67		14200	0.72	0.8	13400	0.74	0.9	12650	0.76	1.0
	85/72		15600	0.62	0.8	14750	0.63	0.9	13950	0.65	1.0
ECE18	75/57	620	17600	1.00	1.1	16800	1.00	1.2	16000	1.00	1.4
	75/63		18700	0.79	1.1	17750	0.81	1.3	16750	0.84	1.4
	80/67		19900	0.77	1.2	18950	0.79	1.3	17900	0.81	1.4
	85/72		21500	0.70	1.2	20450	0.72	1.3	19350	0.74	1.5
ECE24	75/57	790	24600	1.00	1.5	23500	1.00	1.7	21900	1.00	1.9
	75/63		26100	0.75	1.5	24800	0.77	1.7	23450	0.79	1.9
	80/67		27850	0.73	1.5	26500	0.75	1.7	25050	0.76	1.9
	85/72		30400	0.66	1.5	28850	0.68	1.7	27300	0.69	1.9
ECE30	75/57	800	27250	0.99	1.9	26250	1.00	2.1	25450	1.00	2.3
	75/63		30000	0.72	1.9	28600	0.74	2.1	27100	0.75	2.3
	80/67		32000	0.69	2.0	30500	0.71	2.1	28900	0.72	2.3
	85/72		34800	0.63	2.0	33000	0.64	2.1	31450	0.65	2.3

MODEL NUMBER	Indoor Temp DB/WB	Airflow	Outdoor Temperature °F								
			95.0			105.0			115.0		
			BTU/H	S/T	kW	BTU/H	S/T	kW	BTU/H	S/T	kW
ECE09	75/57	300	7900	1.00	0.9	7500	1.00	1.0	7100	1.00	1.0
	75/63		8550	0.82	0.9	8050	0.84	1.0	7500	0.87	1.1
	80/67		9400	0.78	0.9	8850	0.81	1.0	8250	0.83	1.1
	85/72		10500	0.70	0.9	9900	0.72	1.0	9300	0.74	1.1
ECE12	75/57	390	10450	1.00	1.1	9800	1.00	1.2	9200	1.00	1.3
	75/63		11100	0.81	1.1	10300	0.84	1.2	9550	0.88	1.3
	80/67		11850	0.78	1.1	11050	0.82	1.2	10250	0.85	1.3
	85/72		13050	0.67	1.1	12200	0.69	1.2	11300	0.72	1.3
ECE18	75/57	620	15200	1.00	1.5	14350	1.00	1.6	13450	1.00	1.8
	75/63		15750	0.86	1.5	14800	0.90	1.7	13750	0.93	1.8
	80/67		16850	0.84	1.6	15750	0.87	1.7	14700	0.91	1.8
	85/72		18250	0.76	1.6	17050	0.79	1.8	15950	0.83	1.9
ECE24	75/57	790	20850	1.00	2.1	19700	1.00	2.3	18500	1.00	2.6
	75/63		22050	0.81	2.1	20700	0.84	2.3	19250	0.87	2.6
	80/67		23650	0.79	2.1	22150	0.81	2.3	20650	0.84	2.6
	85/72		25800	0.71	2.1	24150	0.73	2.4	22250	0.75	2.6
ECE30	75/57	800	23650	1.00	2.5	22550	1.00	2.8	21300	1.00	3.1
	75/63		25550	0.76	2.5	24050	0.79	2.8	22600	0.81	3.1
	80/67		27350	0.74	2.6	25750	0.76	2.8	24150	0.79	3.1
	85/72		29650	0.67	2.6	27950	0.69	2.8	26200	0.71	3.1

Extended cooling performance data tabulated based off test at rated Airflow at .3 in. H_2O of external static.

ELECTRICAL DATA:

MODEL NUMBER	COMPRESSOR		OUTDOOR MOTOR		INDOOR MOTOR		MIN. CIRCUIT AMPACITY (MCA)		MAX. OVERCURRENT PROTECTION (MOP)	
	RLA	LRA	FLA	HP	FLA	HP	CIRCUIT 1 (L1-L2)		CIRCUIT 1 (L1-L2)	
							240V	208V	240V	208V
ECE09203B	4.4	20	2.3	1/4	2.3	1/4	16.4	18.5	20	20
ECE12203B	4.7	26	2.3	1/4	2.8	1/3	17.0	19.1	15	20
ECE12205B	4.7	26	2.3	1/4	2.8	1/3	23.8	26.9	25	30
ECE18203B	9	56	2.3	1/4	2.8	1/3	17.6	19.1	25	25
ECE18205B	9	56	2.3	1/4	2.8	1/3	26.0	29.5	30	30
ECE18207B	9	56	2.3	1/4	2.8	1/3	35.1	40.0	40	40
ECE18210B	9	56	2.3	1/4	2.8	1/3	48.6	55.6	50	60
ECE24205B	10.1	62	2.3	1/4	2.8	1/3	26.0	29.5	25	30
ECE24207B	10.1	62	2.3	1/4	2.8	1/3	35.1	40.0	40	40
ECE24210B	10.1	62	2.3	1/4	2.8	1/3	48.6	55.6	50	60
ECE30205B	12.8	65	2.8	1/3	4.1	1/2	27.7	31.2	35	35
ECE30207B	12.8	65	2.8	1/3	4.1	1/2	36.7	41.6	40	45

For all models, units have single point power and can only operate either the compressor or electric heat at the same time.

Refer to the wiring diagrams in the ECE IOM for additional details.

Wire size should be determined in accordance with National Electric Codes.

Unit are rated for 208/230V, but MOP, MCA values are calculated at 208/240V.

Data is subject to change. Please verify most current information on www.firstco.com or www.AE-Air.com websites.

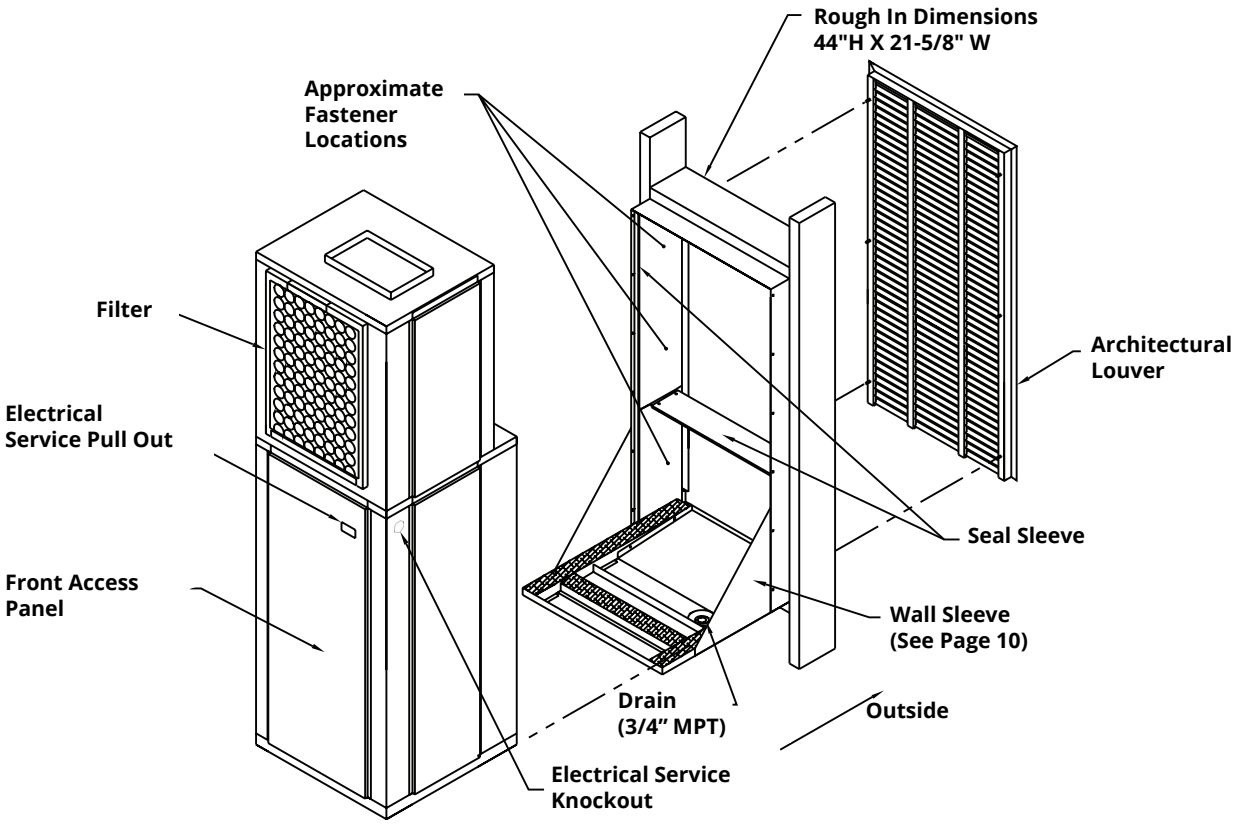

General Assembly for Standard Sleeve and Louver

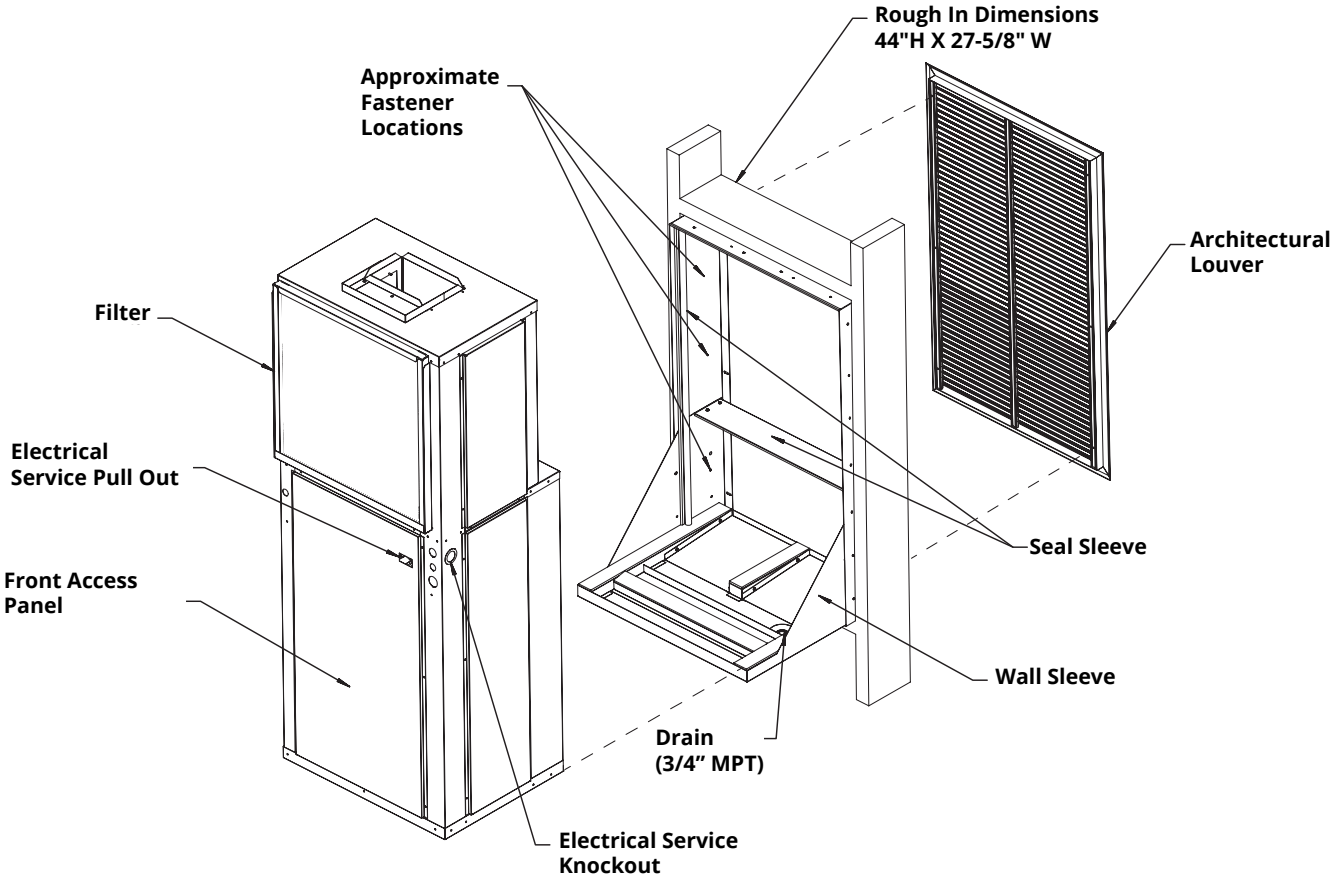

General Assembly for Large Sleeve and Louver Size 24

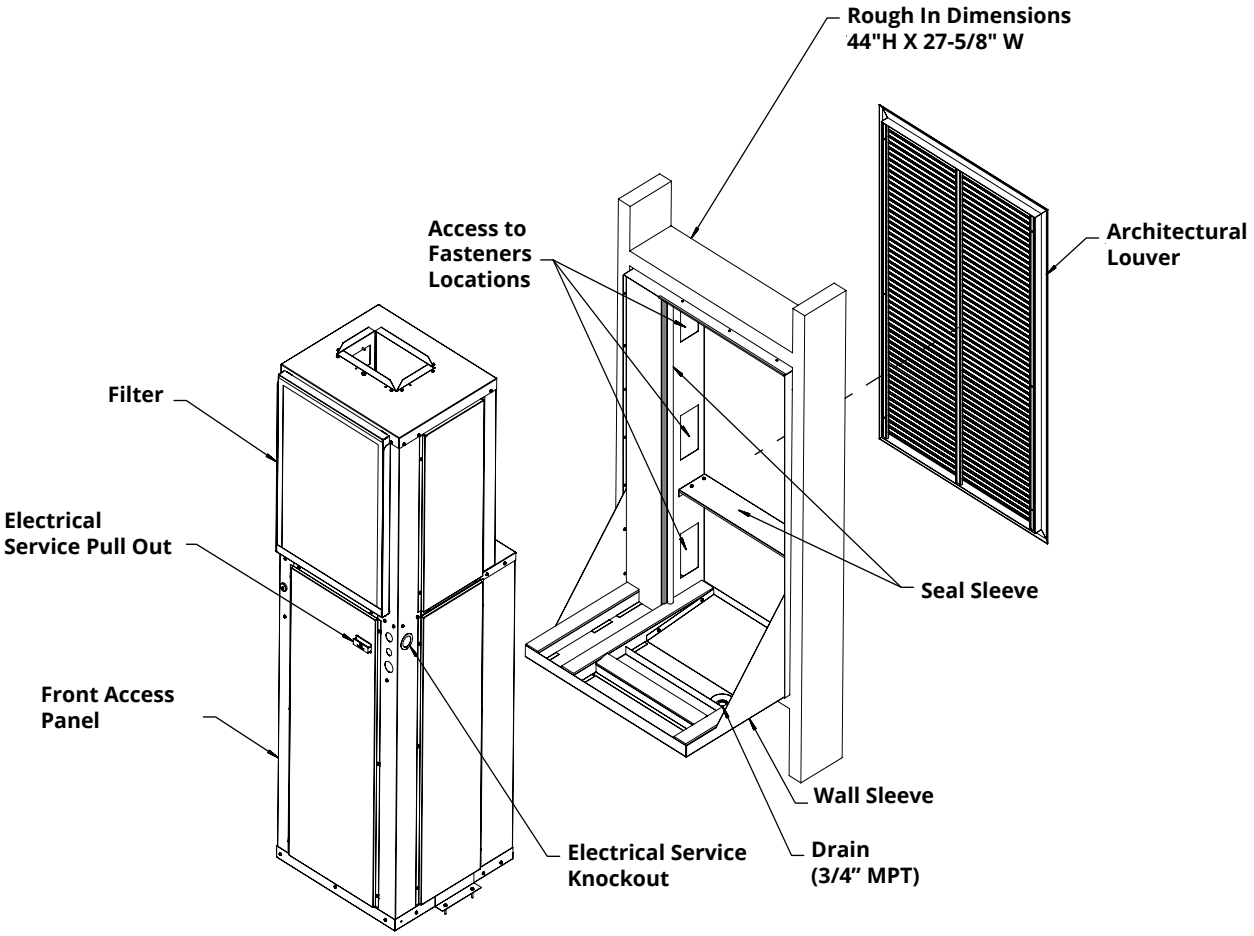

General Assembly for Large Sleeve and Louver for 09-18 Sizes with Block Off

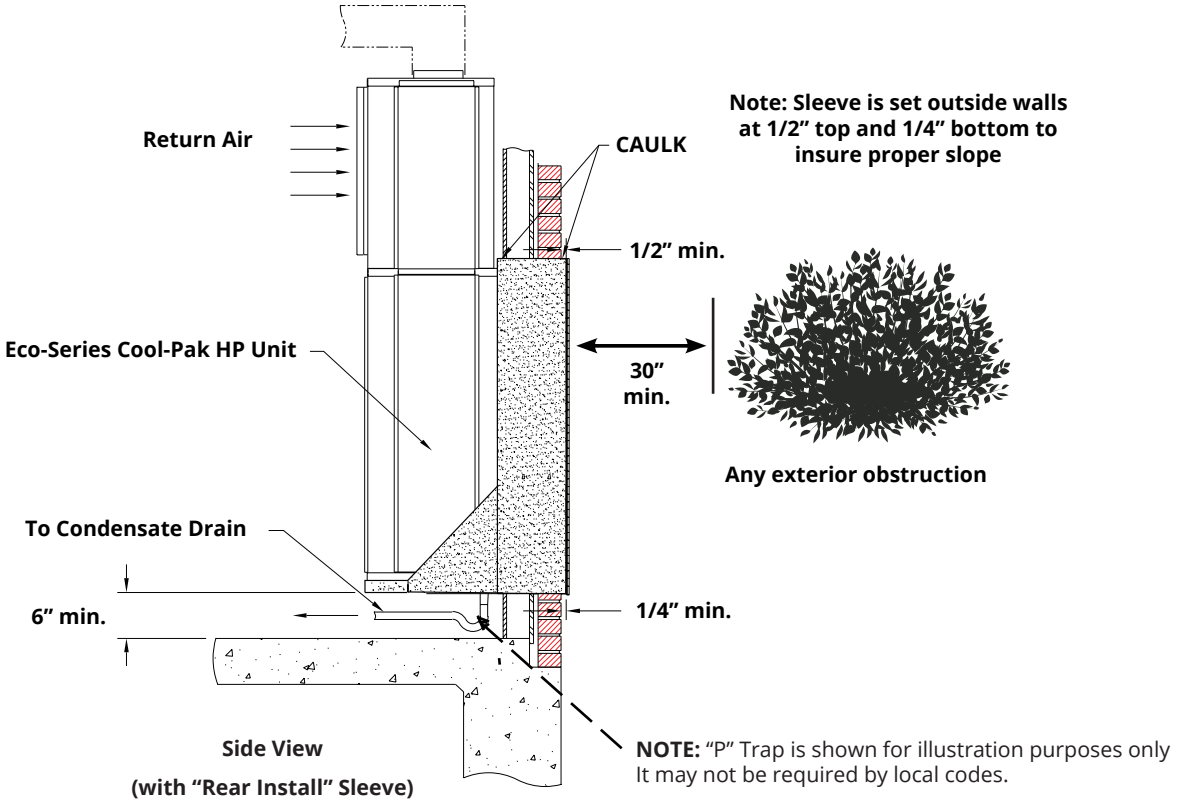

CLOSET DIMENSIONS:

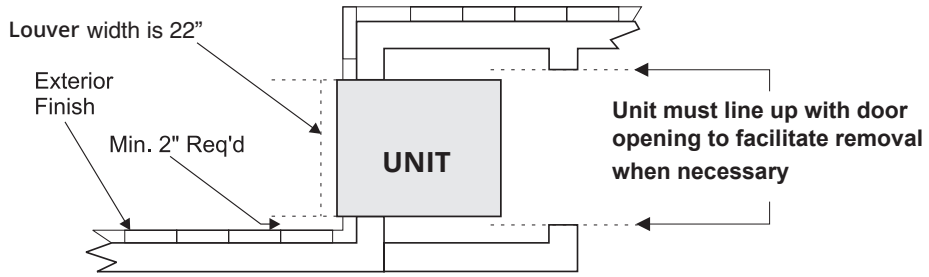

NOTES:
1. Sleeve rough-in opening is 44”(H) X 21-5/8”(W).
2. Bottom of opening should be approx. 6” above floor level.
3. Minimum 3” of clearance is required on all sides of the unit.
4. Note Wind Resistant Louver is 3/4” larger

Rear Installation *Detail for Small Sleeve 21" Wide (9-18 only)*

INSTRUCTIONS:

To find the minimum closet depth (dimension “C”), use the following method:

Determine dimension “A” which is the total finished wall thickness.

- For 5”-8” outside wall thickness, subtract “A” from 29”. (“C” = 29 - “A”)
- For 8”-12” outside wall thickness, subtract “A” from 33”. (“C” = 33 - “A”)
- For 12”-15” outside wall thickness, subtract “A” from 36”. (“C” = 36 - “A”)

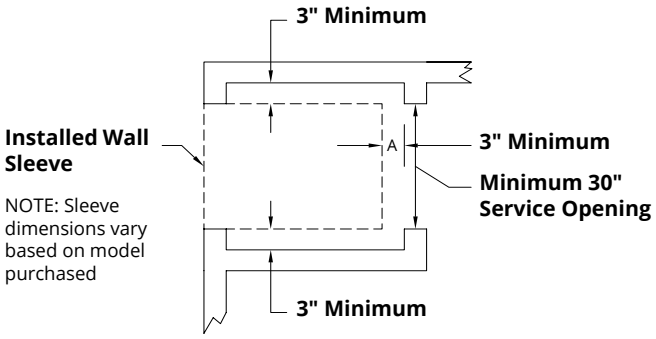

NOTE: Provide minimum clearances as shown for interior closet dimensions.

Rear Installation *Detail for Large Sleeve 27” Wide (24,30 Size or 9-18 with Blockoff)*

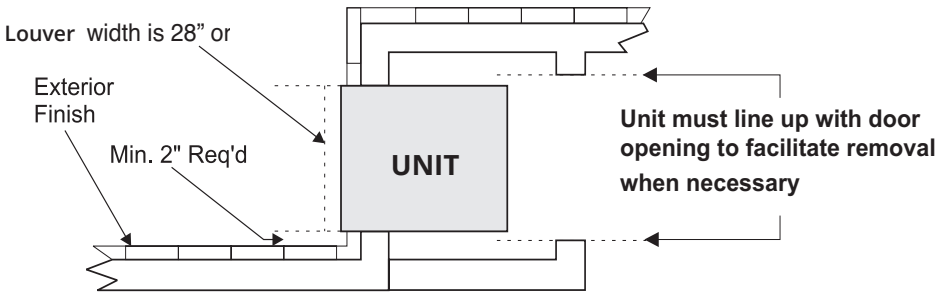

NOTES:
1. Sleeve rough-in opening is 44”(H) X 27-5/8”(W).
2. Bottom of opening should be approx. 6” above floor level.
3. Minimum 3” of clearance is required on all sides of the unit.
4. Note Wind Resistant Louver is 3/4” larger

CLOSET DIMENSIONS (CONT.):

Rear Installation *Detail for Large Sleeve 27" Wide (24,30 size or 9-18 with Blockoff)*

INSTRUCTIONS:

To find the minimum closet depth (dimension "C"), use the following method:

Determine dimension "A" which is the total finished wall thickness.

- For 5"-8" outside wall thickness, subtract "A" from 39".
  ("C" = 39 - "A")
- For 8"-12" outside wall thickness, subtract "A" from 43".
  ("C" = 43 - "A")
- For 12"-15" outside wall thickness, subtract "A" from 46".
  ("C" = 46 - "A")

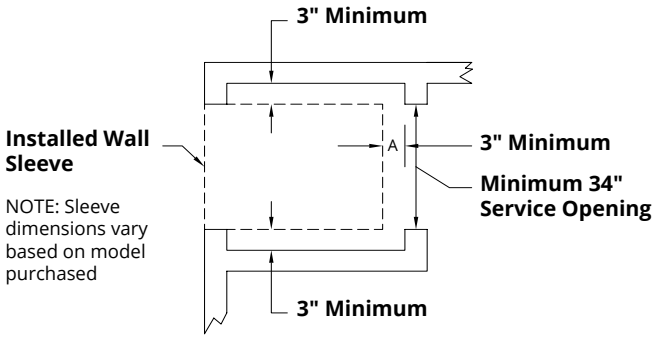

NOTE: Provide minimum clearances as shown for interior closet dimensions.

Side Installation *Detail for Small Sleeve 21" Wide (9-18 size only)*

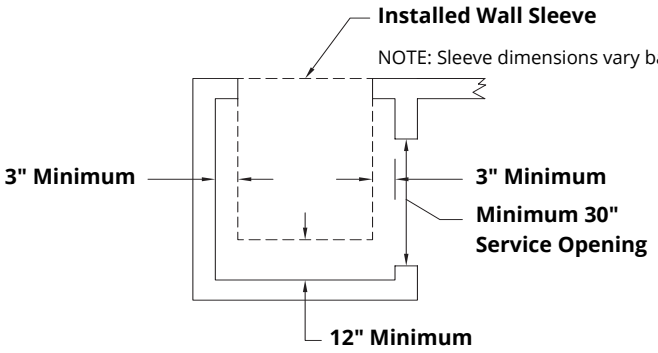

NOTE:
Sleeve should be installed in a exterior wall prior to constructing the closet.

Notes:
1. Sleeve rough-in opening is 44"(H) X 21-5/8"(W).
2. Bottom of opening should be approx. 6" above floor level.
3. Minimum 3" of clearance is required on the sides of the unit and 12" clearance on the rear

Side Installation *Detail for Large Sleeve 27" Wide (24 or 30 or 9-18 with Blockoff)*

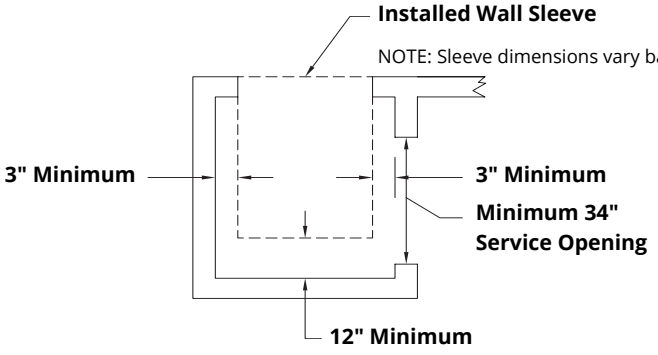

NOTE:
Sleeve should be installed in a exterior wall prior to constructing the closet.

Notes:
1. Sleeve rough-in opening is 44"(H) X 27-5/8"(W).
2. Bottom of opening should be approx. 6" above floor level.
3. Minimum 3" of clearance is required on the sides of the unit and 12" clearance on the rear of the unit .

P.O. BOX 270969 - DALLAS, TEXAS 75227
PH. (214) 388-5751 | FAX (214) 388-2255
www.firstco.com
December 2023