RGV-RAV-090-180

Product Specifications

SINGLE PACKAGE ROOFTOP UNITS WITH X-VANE™ FAN TECHNOLOGY: GAS HEATING/ ELECTRIC COOLING (RGV) AND ELECTRIC COOLING/OPTIONAL ELECTRIC HEAT (RAV) 7.5 TO 15 TON

The new 7.5 to 15 Ton RGV/RAV090-180 series rooftop units (RTU) with X-Vane Fan Technology provides value added benefits never seen in this type of equipment before. New major design features include:

RGV/RAV090-180

X-Vane™ Fan

- Patented, industry's first efficient indoor fan system using Vane Axial fan with electric commutated variable speed motor. As compared to today's typically used belt drive with forward curve fans, system provides reliable operation with:
  - 75% fewer moving parts
  - No fan belts, pulleys, shaft, and shaft bearings
  - 40% more efficient than traditional belt drive forward curve fans
  - Slow ramp up capability for better sound and comfort control
  - Internal protection from phase reversal and phase loss situations
  - High external static capability
  - Slide out blower assembly design
- Reliable and highly safety protected 2 stage cooling with tandem scroll compressors technology, fully active evaporator coil, and mixed air temperature protection on all models
- New unit control board with intuitive indoor fan that uses simple dial and switch adjustments
- Reliable copper tube/aluminum fin condenser coil with 5/16 in. tubing to help reduce refrigerant charge and reduce weight versus prior designs

RGV/RAV units up to 15 tons are specifically designed to fit on our existing roof curbs that were installed back to 1989, which makes replacement easy and eliminates the need for curb adapters, changing utility connections or supporting curb overhang situations.

2 speed indoor fan motor system helps deliver IEERs up to 15.2. All models are capable of either vertical or horizontal air-flow without dedicated models or field install kits. The 15 ton models require a field-installed supply air kit.

With "no-strip" screw collars, handled access panels, and more, the unit is easy to install, easy to maintain, and easy to use. Your new 7.5 to 15 ton RGV/RAV rooftop unit (RTU) provides optimum comfort and control from a packaged rooftop.

Installation ease

All RGV/RAV090-180 units are field-convertible to horizontal airflow, which makes it easy to adjust to unexpected job-site complications. Lighter units make for easy replacement and aid in the structural approval process. Units have simple, fast plug-in connections to the standard integrated unit control board (UCB). Clearly labeled connections points to reduce installation time. Also, a large control box provides room to work.

Easy to maintain

With the new X-Vane Fan Vane Axial fan and direct drive ECM motor, there is no longer a need to adjust or replace belts or pulleys as in past designs. This frees up maintenance, installation, and commissioning time.

Easy access handles provide quick and easy access to all normally serviced components. Our "no-strip" screw system has superior holding power and guides screws into position while preventing the screw from stripping the unit's metal.

Sloped, corrosion resistant composite drain pan sheds water and won't rust.

Easy to use

The newly re-designed Unit Control Board puts all connections and troubleshooting points in one convenient place. Most low voltage connections are made to the same board and make it easy to access it. Setting up the fan is simple by an intuitive switch and rotary dial arrangement. RGV/RAV090-180 rooftops have high and low pressure switches, a new mixed air temperature switch, a filter drier, and 2 in. filters standard.

Table of contents

	Page
Features/Benefits	2
Model Number Nomenclature	3
Capacity Ratings	5
Physical Data	8
Options and Accessories	12
Base Unit Dimensions	17
Accessory Dimensions	35
Performance Data	37
Fan Data	59
Electrical Data	100
Typical Wiring Diagrams	124
Sequence of Operation	138
Application Data	140
Guide Specifications	142

X-Vane Fan Technology

Direct drive X-Vane Fan Technology indoor fan system uses vane axial fan design and electrically commutated motors. This new Vane Axial design over past belt drive systems has 75% fewer moving parts, uses up to 40% less energy and has no fan belts, blower bearings, or shaft.

Design features include:

- Two-stage units deliver IEERs up to 15.2.
- All models are capable of either vertical or horizontal airflow.
- RGV/RAV090-180 rooftop units (RTU) were designed by customers for customers. With “no-strip” screw collars, handled access panels, and more the unit is easy to install, easy to maintain, and easy to use. Your new 7.5 to 15 ton RGV/RAV090-180 rooftop unit (RTU) provides optimum comfort and control from a packaged rooftop.

Features/Benefits

Value-added features include:

- Optional Hot Gas Re-Heat dehumidification system for improved part load humidity performance
- Single point gas and electrical connections
- 7.5 to 15 ton models use fixed TXV refrigerant metering device
- Scroll compressors with internal line-break overload protection
- Units come with an easy access tool-less filter door. Filter track tilts out for filter removal and replacement. All filters are the same size in each unit

Operating efficiency and flexibility

These RGV/RAV packaged rooftops meet the Department of Energy (DOE) 2023 efficiency standard, as well as the latest ASHRAE (American Society of Heating, Refrigerating, and Air-Conditioning Engineers) 90.1 and IECC[1] (International Energy Conservation Code) minimum IEER efficiency requirements.

Field convertible airflow

All RGV/RAV090-180 units are field-convertible to horizontal airflow, which makes it easy to adjust to unexpected job site complications. 15 ton models require a simple supply duct cover kit to field convert from factory vertical to horizontal.

Comfort control

Our patented Hot Gas Re-Heat dehumidification system is an all-inclusive factory-installed option on gas heating/electric cooling and electric cooling/electric heat models. This system provides reliable, flexible operation to meet indoor part load sensible and latent requirements as well as multiple gas heat and electric heat sized to fit an array of applications.

1. IECC is a registered trademark of International Code Council, Inc.

Model number nomenclature

RGV090-180 MODEL NUMBER NOMENCLATURE

MODEL SERIES	R	G	V	0	9	0	L	D	2	A	0	A	A	B
Position Number	1	2	3	4	5	6	7	8	9	10	11	12	13	14

R = Rooftop

G = Gas Heat / Electric Cooling — **Type**

V = R-410A with X-Vane™ Fan — **Standard Efficiency**

090 = 90,000 BTUH = 7.5 Tons
102 = 102,000 BTUH = 8.5 Tons
120 = 120,000 BTUH = 10 Tons
150 = 150,000 BTUH = 12.5 Tons
180 = 180,000 BTUH = 15 Tons — **Nominal Cooling Capacity**

H = 208/230-3-60
L = 460-3-60
S = 575-3-60 — **Voltage**

D = Low Heat
E = Medium Heat
F = High Heat
S = Low Heat, Stainless Steel Heat Exchanger
R = Medium Heat, Stainless Steel Heat Exchanger
T = High Heat, Stainless Steel Heat Exchanger — **Heating Capacity**

2 = Standard/Medium Static Direct Drive ECM with X-Vane™ Fan
3 = High Static Direct Drive ECM with X-Vane Fan
4 = High Static Direct Drive ECM with X-Vane Fan and Hot Gas Re-Heat
5 = Standard/Medium Static, Vertical Supply and Filter Status Switch
6 = High Static, Vertical Supply and Filter Status Switch
7 = High Static, Vertical Supply and Filter Status Switch with Hot Gas Re-Heat — **Motor (Indoor Fan)**

A = None
B = Low Leak EconoMi$er® X with Barometric Relief, OA Temp Sensor
E = Low Leak EconoMi$er X with Barometric Relief, + CO_2 Densor, OA Temp Sensor
H = Low Leak EconoMi$er X with Barometric Relief, Enthalpy Sensor
L = Economizer with Barometric Relief + CO_2 Sensor, Enthalpy Sensor
U = Ultra Low Leak Economizer with Barometric relief, OA Temp Sensor
W = Ultra Low Leak Economizer with Barometric relief, Enthalpy Sensor — **Outdoor Air Options / Control**

0A = Standard
4B = Non Fused Disconnect Switch
AA = Hinged Access Panels
AT = Un-Powered Convenience Outlet
BB = Powered Convenience Outlet
BP = Return Air Smoke Detector
BR = Supply Air Smoke Detector
CJ = Condensate Overflow Switch — **Factory Installed Options**

A = Aluminum/Copper Condenser and Evaporator Coil
B = Precoat Aluminum/Copper Condenser with Aluminum/Copper Evaporator
C = E-Coated Aluminum/Copper Condenser with Aluminum/Copper Evaporator
D = E-Coated Aluminum/Copper Condenser and Evaporator
E = Copper/Copper Condenser and Aluminum/Copper Evaporator
F = Copper/Copper Condenser and Evaporator — **Condenser / Evaporator Coil Configuration**

A = Economizer control for EconoMi$er IV and all others (except factory-installed EconoMi$er X)
B = Economizer control for factory-installed for EconoMi$er X — **Economizer Control**

Model number nomenclature (cont)

RAV090-180 MODEL NUMBER NOMENCLATURE

MODEL SERIES	R	A	V	0	9	0	L	0	2	A	0	A	A	B
Position Number	1	2	3	4	5	6	7	8	9	10	11	12	13	14

R = Rooftop

A = Cooling Unit with Electric Heat — **Type**

V = R-410A with X-Vane™ Fan — **Standard Efficiency**

090 = 90,000 BTUH = 7.5 Tons
102 = 102,000 BTUH = 8.5 Tons
120 = 120,000 BTUH = 10 Tons
150 = 150,000 BTUH = 12.5 Tons
180 = 180,000 BTUH = 15 Tons — **Nominal Cooling Capacity**

H = 208/230-3-60
L = 460-3-60
S = 575-3-60 — **Voltage**

0 = No Heat (Field Installed Only) — **Electric Heating Capacity**

2 = Standard/Medium Static Direct Drive ECM with X-Vane™ Fan
3 = High Static Direct Drive ECM with X-Vane Fan
4 = High Static Direct Drive ECM with X-Vane Fan and Hot Gas Re-Heat
5 = Standard/Medium Static, Vertical Supply and Filter Status Switch
6 = High Static, Vertical Supply and Filter Status Switch
7 = High Static, Vertical Supply and Filter Status Switch with Hot Gas Re-Heat — **Motor (Indoor Fan)**

A = None
B = Low Leak EconoMi$er® X with Barometric Relief, OA Temp Sensor
E = Low Leak EconoMi$er X with Barometric Relief, + CO_2 Densor, OA Temp Sensor
H = Low Leak EconoMi$er X with Barometric Relief, Enthalpy Sensor
L = Economizer with Barometric Relief + CO_2 Sensor, Enthalpy Sensor
U = Ultra Low Leak Economizer with Barometric Relief, OA Temp Sensor
W = Ultra Low Leak Economizer with Barometric Relief, Enthalpy Sensor — **Outdoor Air Options / Control**

0A = Standard
4B = Non Fused Disconnect Switch
AA = Hinged Access Panels
AT = Un-Powered Convenience Outlet
BB = Powered Convenience Outlet
BP = Return Air Smoke Detector
BR = Supply Air Smoke Detector
CJ = Condensate Overflow Switch — **Factory Installed Options**

A = Aluminum/Copper Condenser and Evaporator Coil
B = Precoat Aluminum/Copper Condenser with Aluminum/Copper Evaporator
C = E-Coated Aluminum/Copper Condenser with Aluminum/Copper Evaporator
D = E-Coated Aluminum/Copper Condenser and Evaporator
E = Copper/Copper Condenser and Aluminum/Copper Evaporator
F = Copper/Copper Condenser and Evaporator — **Condenser / Evaporator Coil Configuration**

A = Economizer control for EconoMi$er IV and all others (except factory-installed EconoMi$er X)
B = Economizer control for factory-installed for EconoMi$er X — **Economizer Control**

Capacity ratings

RGV AHRI RATINGS

UNIT	COOLING STAGES	NOMINAL CAPACITY (TONS)	NET COOLING CAPACITY (MBH)	TOTAL POWER (kW)	EER	IEER WITH 2-SPEED INDOOR FAN MOTOR	AHRI RATING CFM
RGV090	2	7.5	86.0	7.7	11.2	15.0	2650
RGV102	2	8.5	98.0	8.8	11.2	15.0	3400
RGV120	2	10.0	118.0	10.7	11.0	15.0	3500
RGV150	2	12.5	132.0	12.9	10.2	15.0	3750
RGV180	2	15.0	174.0	16.1	10.8	14.5	5250

LEGEND

AHRI — Air-Conditioning, Heating and Refrigeration Institute
EER — Energy Efficiency Ratio
IEER — Integrated Energy Efficiency Ratio

NOTES:

1. Rated in accordance with AHRI Standards 340/360.
2. Rating are based on:
   Cooling Standard: 80°F (27°C) db, 67°F (19°C) wb indoor air temperature and 95°F (35°C) db outdoor air temperature.
   IEER Standard: A measure that expresses cooling part-load EER efficiency for commercial unitary air-conditioning and heat pump equipment on the basis of weighted operation at various load capacities.
3. All RGV090-180 units comply with ASHRAE 90.1-2019 (American Society of Heating, Refrigerating, and Air-Conditioning Engineers) and DOE-2023 (Department of Energy) Energy Standard for minimum IEER requirements.
4. RGV090-180 units comply with US Energy Policy Act (2005). To evaluate code compliance requirements, refer to state and local codes.

RAV AHRI RATINGS

UNIT	COOLING STAGES	NOMINAL CAPACITY (TONS)	NET COOLING CAPACITY (MBH)	TOTAL POWER (kW)	EER	IEER WITH 2-SPEED INDOOR FAN MOTOR	AHRI RATING CFM
RAV090	2	7.5	86.0	7.5	11.4	15.2	2650
RAV102	2	8.5	98.0	8.6	11.4	15.2	3400
RAV120	2	10.0	118.0	10.5	11.2	15.2	3500
RAV150	2	12.5	133.0	12.8	10.4	15.2	3750
RAV180	2	15.0	174.0	15.8	11.0	14.7	5250

LEGEND

AHRI — Air-Conditioning, Heating and Refrigeration Institute
EER — Energy Efficiency Ratio
IEER — Integrated Energy Efficiency Ratio

NOTES:

1. Rated in accordance with AHRI Standards 340/360.
2. Rating are based on:
   Cooling Standard: 80°F (27°C) db, 67°F (19°C) wb indoor air temperature and 95°F (35°C) db outdoor air temperature.
   IEER Standard: A measure that expresses cooling part-load EER efficiency for commercial unitary air-conditioning and heat pump equipment on the basis of weighted operation at various load capacities.
3. All RAV090-180 units comply with ASHRAE 90.1-2019 (American Society of Heating, Refrigerating, and Air-Conditioning Engineers) and DOE-2023 (Department of Energy) Energy Standard for minimum IEER requirements.
4. RAV090-180 units comply with US Energy Policy Act (2005). To evaluate code compliance requirements, refer to state and local codes.

Capacity ratings (cont)

SOUND RATINGS TABLE

RGV/RAV UNIT	COOLING STAGES	OUTDOOR SOUND (dB) at 60 Hz								
		A-WEIGHTED	63	125	250	500	1000	2000	4000	8000
090	2	79	85.6	84.7	80.5	76.0	72.4	68.0	62.8	59.3
102	2	79	85.6	84.7	80.5	76.0	72.4	68.0	62.8	59.3
120	2	79	85.6	84.7	80.5	76.0	72.4	68.0	62.8	59.3
150	2	79	85.6	84.7	80.5	76.0	72.4	68.0	62.8	59.3
180	2	87	87.0	85.2	84.6	84.9	82.8	78.4	75.3	72.9

LEGEND

dB — Decibel

NOTES:

1. Outdoor sound data is measured in accordance with AHRI.
2. Measurements are expressed in terms of sound power. Do not compare these values to sound pressure values because sound pressure depends on specific environmental factors which normally do not match individual applications. Sound power values are independent of the environment and therefore more accurate.
3. A-weighted sound ratings filter out very high and very low frequencies, to better approximate the response of “average” human ear. A-weighted measurements for RGV/RAV units are taken in accordance with AHRI.

MINIMUM - MAXIMUM AIRFLOW RATINGS (CFM) — NATURAL GAS AND PROPANE

UNIT	HEAT LEVEL	COOLING			HEATING[a]	
		MINIMUM 2-SPEED AIRFLOW (LOW SPEED)	MINIMUM 2-SPEED AIRFLOW (HIGH SPEED)	MAXIMUM AIRFLOW CFM	MINIMUM AIRFLOW CFM	MAXIMUM AIRFLOW CFM
RGV090	LOW	1350	2250	3750	1730	3800
	MED				2100	3900
	HIGH				2240	4200
RGV102	LOW	1275	2550	4250	1730	4750
	MED				2100	4560
	HIGH				2240	4800
RGV120	LOW	1800	3000	5000	2100	5470
	MED				2580	5600
	HIGH				2710	5420
RGV150	LOW	2250	3750	6250	2100	6830
	MED				2580	6720
	HIGH				2710	6330
RGV180	LOW	2970	4500	7500	2450	9000
	MED				3000	9000
	HIGH				4040	7500

NOTE(S):
a. Heating rating values are identical for aluminum heat exchangers and stainless steel heat exchangers.

MINIMUM - MAXIMUM AIRFLOW RATINGS (CFM) — COOLING UNITS AND ACCESSORY ELECTRIC HEAT

UNIT	COOLING			ELECTRIC HEAT[a]	
	MINIMUM 2-SPEED AIRFLOW (LOW SPEED)	MINIMUM 2-SPEED AIRFLOW (HIGH SPEED)	MAXIMUM AIRFLOW CFM	MINIMUM AIRFLOW CFM	MAXIMUM AIRFLOW CFM
RAV090	1350	2250	3750	2250	3750
RAV102	1275	2550	4250	2550	4250
RAV120	1800	3000	5000	3000	5000
RAV150	2250	3750	6250	3750	6250
RAV180	2970	4500	7500	4500	7500

NOTE(S):
a. Electric heat modules and single point kits are available as field-installed accessories for RAV units.

Capacity ratings (cont)

HEAT RATING TABLE — NATURAL GAS AND PROPANE

UNIT	GAS HEAT	AL/SS HEAT EXCHANGER		TEMPERATURE RISE (°F)	THERMAL EFFICIENCY (%)
		INPUT/OUTPUT STAGE 1 (MBH)	INPUT/OUTPUT STAGE 2 (MBH)		
RGV090	LOW	–/–	125/103	25-55	82
	MED	120/98	180/148	35-65	82
	HIGH	180/146	224/181	40-75	81
RGV102	LOW	–/–	125/103	20-55	82
	MED	120/98	180/148	30-65	82
	HIGH	180/146	224/181	35-75	81
RAV120	LOW	120/98	180/148	25-65	82
	MED	180/146	224/181	30-65	81
	HIGH	200/164	250/205	35-70	82
RGV150	LOW	120/98	180/148	20-65	82
	MED	180/146	224/181	25-65	81
	HIGH	200/160	250/205	30-70	82
RGV180	LOW	144/118	180/146	15-55	81
	MED	192/156	240/195	20-60	81
	HIGH	280/224	350/284	35-65	81

LEGEND

MBH — Btuh in thousands

Physical data

RGV/RAV 7.5 TO 8.5 TON PHYSICAL DATA

RGV/RAV UNIT	RGV/RAV090**2/3/5/6	RGV/RAV090**4/7	RGV/RAV102**2/3/5/6	RGV/RAV102**4/7
NOMINAL TONS	7.5	7.5	8.5	8.5
BASE UNIT OPERATING WT (lb) RGV/RAV[a]	787/743	787/743	868/805	868/805
REFRIGERATION SYSTEM				
No. Circuits/No. Compressors/Type	1 / 2 / Scroll	1 / 2 / Scroll	1 / 2 / Scroll	1 / 2 / Scroll
R-410A Charge (lb-oz)	13-3	—	14-0	—
Hot Gas Re-Heat R-410A Charge (lb-oz)	—	19-5	—	21-0
Metering Device	TXV	TXV	TXV	TXV
Hot Gas Re-Heat Metering Device	—	TXV	—	TXV
High-Pressure Trip/Reset (psig)	630/505	630/505	630/505	630/505
Low-Pressure Trip/Reset (psig)	54/117	54/117	54/117	54/117
EVAPORATOR COIL				
Material (Tube/Fin)	Cu/Al	Cu/Al	Cu/Al	Cu/Al
Coil Type	3/8 in. RTPF	3/8 in. RTPF	3/8 in. RTPF	3/8 in. RTPF
Rows/FPI	3/15	3/15	4/15	4/15
Total Face Area (ft^2)	8.9	8.9	8.9	8.9
Condensate Drain Connection Size	3/4 in.	3/4 in.	3/4 in.	3/4 in.
CONDENSER COIL				
Material	Cu/Al	Cu/Al	Cu/Al	Cu/Al
Coil Type	5/16 in. RTPF	5/16 in. RTPF	5/16 in. RTPF	5/16 in. RTPF
Rows/FPI	2/18	2/18	2/18	2/18
Total Face Area (ft^2)	20.5	20.5	21.4	21.4
HOT GAS RE-HEAT COIL				
Material	—	Cu/Al	—	Cu/Al
Coil Type	—	5/16 in. RTPF	—	5/16 in. RTPF
Rows/FPI	—	2/18	—	2/18
Total Face Area (ft^2)	—	6.0	—	8.0
EVAPORATOR FAN AND MOTOR				
Standard/Medium Static				
Motor Qty / Drive Type	1 / Direct	1 / Direct	1 / Direct	1 / Direct
Max Cont bhp	2.4	2.4	2.4	2.4
Range (rpm)	250-2000	250-2000	250-2000	250-2000
Fan Qty/Type	1/Vane Axial	1/Vane Axial	1/Vane Axial	1/Vane Axial
Fan Diameter (in.)	22	22	22	22
High Static				
Motor Qty / Drive Type	1 / Direct	1 / Direct	1 / Direct	1 / Direct
Max Cont bhp	3	3	3	3
Range (rpm)	250-2200	250-2200	250-2200	250-2200
Fan Qty/Type	1/Vane Axial	1/Vane Axial	1/Vane Axial	1/Vane Axial
Fan Diameter (in.)	22	22	22	22
CONDENSER FAN AND MOTOR				
Qty / Motor Drive Type	2 / Direct	2 / Direct	2 / Direct	2 / Direct
Motor hp/rpm	1/4 / 1100	1/4 / 1100	1/4 / 1100	1/4 / 1100
Fan Diameter (in.)	22	22	22	22
FILTERS				
RA Filter Qty / Size (in.)	4 / 16x20x2	4 / 16x20x2	4 / 16x20x2	4 / 16x20x2
OA Inlet Screen Qty / Size (in.)	1 / 20x24x1	1 / 20x24x1	1 / 20x24x1	1 / 20x24x1

NOTE(S):
a. Base unit operating weight does not include weight of options.

LEGEND

bhp — Brake Horsepower
FPI — Fins Per Inch
OA — Outdoor Air
RA — Return Air

Physical data (cont)

RGV/RAV 10 TO 12.5 TON PHYSICAL DATA

RGV/RAV UNIT	RGV/RAV120**2/3/5/6	RGV/RAV120**4/7	RGV/RAV150**2/3/5/6	RGV/RAV150**4/7
NOMINAL TONS	10.0	10.0	12.5	12.5
BASE UNIT OPERATING WT (lb) RGV/RAV[a]	878/815	878/815	1041/978	1041/978
REFRIGERATION SYSTEM				
No. Circuits/No. Compressors/Type	1 / 2 / Scroll	1 / 2 / Scroll	1 / 2 / Scroll	1 / 2 / Scroll
R-410A Charge (lb-oz)	15-3	—	19-8	—
Hot Gas Re-Heat R-410A Charge (lb-oz)	—	23-3	—	28-6
Metering Device	TXV	TXV	TXV	TXV
Hot Gas Re-Heat Metering Device	—	TXV	—	TXV
High-Pressure Trip/Reset (psig)	630/505	630/505	630/505	630/505
Low-Pressure Trip/Reset (psig)	54/117	54/117	54/117	54/117
EVAPORATOR COIL				
Material (Tube/Fin)	Cu/Al	Cu/Al	Cu/Al	Cu/Al
Coil Type	3/8 in. RTPF	3/8 in. RTPF	3/8 in. RTPF	3/8 in. RTPF
Rows/FPI	4/15	4/15	4/15	4/15
Total Face Area (ft^2)	11.1	11.1	11.1	11.1
Condensate Drain Connection Size	3/4 in.	3/4 in.	3/4 in.	3/4 in.
CONDENSER COIL				
Material	Cu/Al	Cu/Al	Cu/Al	Cu/Al
Coil Type	5/16 in. RTPF	5/16 in. RTPF	5/16 in. RTPF	5/16 in. RTPF
Rows/FPI	2/18	2/18	3/18	3/18
Total Face Area (ft^2)	25.1	25.1	25.1	25.1
HOT GAS RE-HEAT COIL				
Material	—	Cu/Al	—	Cu/Al
Coil Type	—	5/16 in. RTPF	—	5/16 in. RTPF
Rows/FPI	—	2/18	—	2/18
Total Face Area (ft^2)	—	8.0	—	8.0
EVAPORATOR FAN AND MOTOR				
Standard/Medium Static				
Motor Qty / Drive Type	1 / Direct	1 / Direct	1 / Direct	1 / Direct
Max Cont bhp	2.4	2.4	3	3
Range (rpm)	250-2000	250-2000	250-2200	250-2200
Fan Qty / Type	1 / Vane Axial	1 / Vane Axial	1 / Vane Axial	1 / Vane Axial
Fan Diameter (in.)	22	22	22	22
High Static				
Motor Qty / Drive Type	1 / Direct	1 / Direct	1 / Direct	1 / Direct
Max Cont bhp	5	5	5	5
Range (rpm)	250-2200	250-2200	250-2200	250-2200
Fan Qty / Type	1 / Vane Axial	1 / Vane Axial	1 / Vane Axial	1 / Vane Axial
Fan Diameter (in.)	22	22	22	22
CONDENSER FAN AND MOTOR				
Qty / Motor Drive Type	2 / Direct	2 / Direct	1 / Direct	1 / Direct
Motor hp / rpm	1/4 / 1100	1/4 / Multiple Speeds	1 / Multiple Speeds	1 / Multiple Speeds
Fan Diameter (in.)	22	22	30	30
FILTERS				
RA Filter Qty / Size (in.)	4 / 20x20x2	4 / 20x20x2	4 / 20x20x2	4 / 20x20x2
OA Inlet Screen Qty / Size (in.)	1 / 20x24x1	1 / 20x24x1	1 / 20x24x1	1 / 20x24x1

NOTE(S):
a. Base unit operating weight does not include weight of options.

LEGEND

bhp — Brake Horsepower
FPI — Fins Per Inch
OA — Outdoor Air
RA — Return Air

Physical data (cont)

RGV/RAV 15 TON PHYSICAL DATA

RGV/RAV UNIT	RGV/RAV180**2/3/5/6	RGV/RAV180**4/7
NOMINAL TONS	15.0	15.0
BASE UNIT OPERATING WT (lb) RGV/RAV[a]	1408/1325	1408/1325
REFRIGERATION SYSTEM		
No. Circuits/No. Compressors/Type	1 / 2 / Scroll	1 / 2/ Scroll
R-410A Charge (lb-oz)	24-0	34-0
Hot Gas Re-Heat R-410A Charge (lb-oz)	—	34-0
Metering Device	TXV	TXV
Hot Gas Re-Heat Metering Device	—	—
High-Pressure Trip/Reset (psig)	630/505	630/505
Low-Pressure Trip/Reset (psig)	54/117	54/117
EVAPORATOR COIL		
Material (Tube/Fin)	Cu/Al	Cu/Al
Coil Type	3/8 in. RTPF	3/8 in. RTPF
Rows/FPI	3/15	3/15
Total Face Area (ft^2)	17.5	17.5
Condensate Drain Connection Size	3/4 in.	3/4 in.
CONDENSER COIL		
Material	Cu/Al	Cu/Al
Coil Type	5/16 in. RTPF	5/16 in. RTPF
Rows/FPI	2/18	2/18
Total Face Area (ft^2)	46.2	46.2
HOT GAS RE-HEAT COIL		
Material	—	Cu/Al
Coil Type	—	5/16 in. RTPF
Rows/FPI	—	2/18
Total Face Area (ft^2)	—	8.0
EVAPORATOR FAN AND MOTOR		
Standard/Medium Static		
Motor Qty / Drive Type	1 / Direct	1 / Direct
Max Cont bhp	3	3
Range (rpm)	250-2000	250-2000
Fan Qty / Type	1 / Vane Axial	1 / Vane Axial
Fan Diameter (in.)	22	22
High Static		
Motor Qty / Drive Type	1 / Direct	1 / Direct
Max Cont bhp	5	5
Range (rpm)	250-2000	250-2000
Fan Qty / Type	1 / Vane Axial	1 / Vane Axial
Fan Diameter (in.)	22	22
CONDENSER FAN AND MOTOR		
Qty / Motor Drive Type	3 / Direct	3 / Direct
Motor hp / rpm	1/4 / 1100	1/4 / 1100
Fan Diameter (in.)	22	22
FILTERS		
RA Filter Qty / Size (in.)	6 / 18x24x2	6 / 18x24x2
OA Inlet Screen Qty / Size (in.)	Vertical: 2 / 24x27x1 Horizontal: 1 / 30x39x1	Vertical: 2 / 24x27x1 Horizontal: 1 / 30x39x1

NOTE(S):
a. Base unit operating weight does not include weight of options.

LEGEND

bhp — Brake Horsepower
FPI — Fins Per Inch
OA — Outdoor Air
RA — Return Air

Physical data (cont)

RGV 7.5 TO 15 TON GAS HEAT DATA

RGV UNIT	RGV090	RGV102	RGV120	RGV150	RGV180
NOMINAL TONS	7.5	8.5	10.0	12.5	15
GAS CONNECTION					
No. of Gas Valves	1	1	1	1	1
Natural Gas Supply Line Pressure (in. wg)/(psig)	4-13 / 0.18-0.47	4-13 / 0.18-0.47	4-13 / 0.18-0.47	4-13 / 0.18-0.47	4-13 / 0.18-0.47
Liquid Propane Supply Line Pressure (in. wg)/(psig)	11-13 / 0.40-0.47	11-13 / 0.40-0.47	11-13 / 0.40-0.47	11-13 / 0.40-0.47	11-13 / 0.40-0.47
HEAT ANTICIPATOR SETTING (AMPS)					
First Stage	0.14	0.14	0.14	0.14	0.14
Second Stage	0.14	0.14	0.14	0.14	0.14
NATURAL GAS HEAT					
LOW					
No. of Stages / No. of Burners (total)	1 / 3	1 / 3	2 / 4	2 / 4	2 / 6
Connection Size	1/2 in. NPT	1/2 in. NPT	3/4 in. NPT	3/4 in. NPT	3/4 in. NPT
Rollout Switch Opens / Closes (°F)	195 / 115	195 / 115	195 / 115	195 / 115	196 / 115
Temperature Rise (°F)	25-55	20-55	25-65	20-65	15-55
MEDIUM					
No. of Stages / No. of Burners (total)	2 / 4	2 / 4	2 / 5	2 / 5	2 / 8
Connection Size	3/4 in. NPT	3/4 in. NPT	3/4 in. NPT	3/4 in. NPT	3/4 in. NPT
Rollout Switch Opens / Closes (°F)	195 / 115	195 / 115	195 / 115	195 / 115	197 / 115
Temperature Rise (°F)	35-65	30-65	30-65	25-65	20-60
HIGH					
No. of Stages / No. of Burners (total)	2 / 5	2 / 5	2 / 5	2 / 5	2 / 10
Connection Size	3/4 in. NPT	3/4 in. NPT	3/4 in. NPT	3/4 in. NPT	3/4 in. NPT
Rollout Switch Opens / Closes (°F)	195 / 115	195 / 115	195 / 115	195 / 115	198 / 115
Temperature Rise (°F)	40-75	35-75	35-70	30-70	35-65
LIQUID PROPANE HEAT					
LOW					
No. of Stages / No. of Burners (total)	1 / 3	1 / 3	2 / 4	2 / 4	2 / 6
Connection Size	1/2 in. NPT	1/2 in. NPT	3/4 in. NPT	3/4 in. NPT	3/4 in. NPT
Rollout Switch Opens / Closes (°F)	195 / 115	195 / 115	195 / 115	195 / 115	196 / 115
Temperature Rise (°F)	25-55	20-55	25-65	20-65	15-55
MEDIUM					
No. of Stages / No. of Burners (total)	1 / 3	1 / 3	2 / 5	2 / 5	2 / 8
Connection Size	1/2 in. NPT	1/2 in. NPT	1/2 in. NPT	1/2 in. NPT	3/4 in. NPT
Rollout Switch Opens / Closes (°F)	195 / 115	195 / 115	195 / 115	195 / 115	197 / 115
Temperature Rise (°F)	35-65	30-65	30-65	25-65	20-60
HIGH					
No. of Stages / No. of Burners (total)	2 / 5	2 / 5	2 / 5	2 / 5	2 / 10
Connection Size	3/4 in. NPT	3/4 in. NPT	3/4 in. NPT	3/4 in. NPT	3/4 in. NPT
Rollout Switch Opens / Closes (°F)	195 / 115	195 / 115	195 / 115	195 / 115	198 / 115
Temperature Rise (°F)	40-75	35-75	35-70	30-70	35-65

Options and accessories

ITEM	OPTION[a]	ACCESSORY[b]
GAS HEAT (RGV units only)		
Low, Medium or High Gas Heat — Aluminized Heat Exchanger	X	
Low, Medium or High Gas Heat — Stainless Steel Heat Exchanger	X	
Propane Conversion Kit		X
High Altitude Conversion Kit		X
Flue Discharge Deflector		X
Flue Shield (090-150 sizes only)		X
ELECTRIC HEAT (RAV units only)		
Electric Resistance Heaters		X
Single Point Kits		X
CABINET		
Thru-the-Base electrical or gas-line connections	X	X
Hinged Access Panels	X	
UV-C Ultraviolet Lamp[c]		X
MERV-13, 2 in. Filters		X
MERV-8, 2 in. Filters		X
4 in. Filter Rack (filters not included)		X
Disconnect Switch Bracket[d]		X
Supply Duct Cover[d]		X
COIL OPTIONS		
Cu/Cu indoor and/or outdoor coils	X	
Pre-coated outdoor coils	X	
Premium, E-coated outdoor coils	X	
HUMIDITY CONTROL		
Hot Gas Re-Heat Dehumidification System	X	
CONDENSER PROTECTION		
Condenser coil hail guard (louvered design)	X	X
CONTROLS		
Thermostats, temperature sensors, and subbases		X
Smoke detector (supply and/or return air)	X	X
Horn Strobe Annunciator[e]		X
Time Guard II compressor delay control circuit		X

ITEM	OPTION[a]	ACCESSORY[b]
Phase Monitor	X	X
ECONOMIZERS AND OUTDOOR AIR DAMPERS		
EconoMi$er X for electromechanical controls, complies with FDD (Low and Ultra Low Leak damper models)[f]	X	X
EconoMi$er® IV for electromechanical controls — Non FDD (Standard air leak damper models)[f]		X
Motorized 2-position outdoor-air damper		X
Manual outdoor-air damper (25% and 50%)		X
Barometric relief[g]	X	X
Power exhaust — prop design		X
Condensate Overflow switch	X	X
ECONOMIZER SENSORS AND IAQ DEVICES		
Single dry bulb temperature sensors[h]	X	X
Differential dry bulb temperature sensors[h]		X
Differential enthalpy sensors[h]		X
CO_2 sensor (wall, duct, or unit mounted)[h]	X	X
INDOOR MOTOR AND DRIVE		
Multiple motor and drive packages	X	
LOW AMBIENT CONTROLS		
Winter start kit[i]		X
Low Ambient controller to 0°F (–18°C)[i]		X
POWER OPTIONS		
Convenience outlet (powered)	X	
Convenience outlet (unpowered)	X	
Convenience outlet, 20 amp (unpowered)		X
Non-fused disconnect[j]	X	
ROOF CURBS		
Roof curb 14 in. (356 mm)		X
Roof curb 24 in. (610 mm)		X

NOTE(S):
a. Factory-installed option.
b. Field-installed accessory.
c. UV-C kits can not be used on units with Hot Gas Re-Heat system.
d. For size 180 units only.
e. Requires a field-supplied 24V transformer for each application. See price pages for details.
f. FDD (Fault Detection and Diagnostic) capability per California Title 24 section 120.2.
g. Included with economizer.
h. Sensors used to optimize economizer performance.
i. See application data for assistance.
j. Non-fused disconnect switch cannot be used when unit electrical rating exceeds:
Sizes 090-150: 80 amps, all voltages
Size 180: 100 amps, all voltages.

Options and accessories (cont)

Factory-installed options

Economizer (dry-bulb or enthalpy)

Economizers save money. They bring in fresh, outside air for ventilation; and provide cool, outside air to cool your building. This is the preferred method of low-ambient cooling. When coupled to CO_2 sensors, economizers can provide even more savings by coupling the ventilation air to only that amount required.

Economizers are available, installed and tested by the factory, with either enthalpy or dry-bulb temperature inputs. Additional sensors are available as accessories to optimize the economizers. Economizers include a powered exhaust system to help equalize building pressures.

Economizers can be factory-installed or easily field-installed.

Unit mounted CO_2 sensor

The CO_2 sensor works with the economizer to intake only the correct amount of outside air for ventilation. As occupants fill your building, the CO_2 sensor detects their presence through increasing CO_2 levels, and opens the economizer appropriately. When the occupants leave, the CO_2 levels decrease, and the sensor appropriately closes the economizer. This intelligent control of the ventilation air, called demand controlled ventilation (DCV), reduces the overall load on the rooftop, saving money. It is also available as a field-installed accessory.

Smoke detector (supply and/or return air)

Trust the experts. Smoke detectors make your application safer and your job easier. Our smoke detectors immediately shut down the rooftop unit when smoke is detected. They are available, installed by the factory, for supply air, return air, or both.

Optional Hot Gas Re-Heat dehumidification system

The Hot Gas Re-Heat dehumidification system is an all-inclusive factory-installed option that can be ordered with any RGV/RAV090-180 rooftop unit.

This system expands the envelope of operation of RGV/RAV rooftop products to provide unprecedented flexibility to meet year round comfort conditions.

The Hot Gas Re-Heat dehumidification system has a unique dual operational mode setting. The Hot Gas Re-Heat system provides greater dehumidification of the occupied space by two modes of dehumidification operations in addition to its normal design cooling mode.

The RGV/RAV090-180 rooftop coupled with the Hot Gas Re-Heat system is capable of operating in normal design cooling mode, sub-cooling mode, and hot gas reheat mode. Normal design cooling mode is when the unit will operate under its normal sequence of operation by cycling compressors to maintain comfort conditions.

Sub-cooling mode will operate to satisfy part load type conditions when the space requires combined sensible and a higher proportion of latent load control. Hot Gas Reheat mode will operate when outdoor temperatures diminish and the need for latent capacity is required for sole humidity control Hot Gas Reheat mode will provide neutral air for maximum dehumidification operation.

NOTE: Hot Gas Re-Heat system includes Low Ambient controller.

Thru-the-base connections

Thru-the-base connections, available as a factory option, are necessary to ensure proper connection and seal when routing wire and piping through the rooftop's basepan and curb. These couplings eliminate roof penetration and should be considered for gas lines, main power lines, as well as control power.

Hinged access panels

Allows access to unit's major components with specifically designed hinged access panels. Panels are filter, control box access indoor fan motor access.

Cu/Cu (indoor) coils

Copper fins and copper tubes are mechanically bonded to copper tubes and copper tube sheets. A polymer strip prevents coil assembly from contacting the sheet metal coil pan to minimize potential for galvanic corrosion between coil and pan.

E-coated (outdoor and indoor) coils

A flexible epoxy polymer coating uniformly applied to all coil surface areas without material bridging between fins. Coating process shall ensure complete coil encapsulation of tubes, fins and headers.

Pre-coated outdoor coils

A durable epoxy-phenolic coating to provide protection in mildly corrosive coastal environments. The coating minimizes galvanic action between dissimilar metals. Coating is applied to the aluminum fin stock prior to the fin stamping process to create an inert barrier between the aluminum fin and copper tube.

Condenser coil hail guard

Sleek, louvered panels protect the condenser coil from hail damage, foreign objects, and incidental contact.

Stainless steel heat exchanger (RGV units only)

The stainless steel heat exchanger option provides the tubular heat exchanger be made out of a minimum 20 gauge type 409 stainless steel for applications where the mixed air to the heat exchanger is expected to drop below 45°F (7°C). Stainless steel may be specified on applications where the presence of airborne contaminants require its use (applications such as paper mills) or in area with very high outdoor humidity that may result in severe condensation in the heat exchanger during cooling operation.

Convenience outlet (powered or un-powered)

Reduce service and/or installation costs by including a convenience outlet in your specification. We install this service feature at our factory. Provides a convenient, 15 amp, 115v GFCI receptacle with "Wet in Use" cover. The "powered" option allows the installer to power the outlet from the line side of the disconnect or load side as

required by code. The “unpowered” option is to be powered from a separate 115/120v power source.

The unpowered convenience outlet is available as a 15 amp factory-installed option or a 20 amp field-installed accessory.

Non-fused disconnect

This OSHA-compliant, factory-installed, safety switch allows a service technician to locally secure power to the rooftop. When selecting a factory-installed non-fused disconnect, note they are sized for the unit as ordered from the factory. The sizing of these do not accommodate field-installed items such as power exhaust devices, etc. If field installing electric heat with factory-installed non-fused disconnect switch, a single point kit may or may not be required.

Condensate overflow switch

This sensor and related controller monitors the condensate level in the drain pan and shuts down compression operation when overflow conditions occur. It includes:

- Indicator light — solid red (more than 10 seconds on water contact — compressors disabled), blinking red (sensor disconnected)
- 10-second delay to break — eliminates nuisance trips from splashing or waves in pan (sensor needs 10 seconds of constant water contact before tripping)
- Disables the compressors operation when condensate plug is detected, but still allows fans to run for economizer.

Power exhaust with barometric relief

Superior internal building pressure control. This field-installed accessory may eliminate the need for costly, external pressure control fans.

Filter maintenance indicator

When the optional factory-installed filter maintenance indicator is used, a factory-installed differential pressure switch measures pressure drop across the outside air filter and activates a field-supplied dry contact indicator when the pressure differential exceeds the adjustable switch setpoint.

Options and accessories (cont)

Field-installed accessories

Condenser coil hail guard

Sleek, louvered panels protect the condenser coil from hail damage, foreign objects, and incidental contact. This can be purchased as a factory-installed option or as a field-installed accessory.

Differential enthalpy sensor

The differential enthalpy sensor is comprised of an outdoor and return air enthalpy sensors to provide differential enthalpy control. The sensor allows the unit to determine if outside air is suitable for free cooling.

Wall or duct mounted CO_2 sensor

The IAQ sensor shall be available in duct or wall mount. The sensor provides demand ventilation indoor air quality (IAQ) control.

Propane conversion kit (RGV units only)

Convert your gas heat rooftop from standard natural gas operation to Propane using this field-installed kit.

High altitude conversion kit (RGV units only)

High altitudes have less oxygen, which affects the fuel/air mixture in heat exchangers. In order to maintain a proper fuel/air mixture, heat exchangers operating in altitudes above 2000 ft (610 m) require different orifices. To select the correct burner orifices or determine the heat capacity for a high altitude application, use either the selection software, or the unit's service manual. High altitudes have less oxygen, which means heat exchangers need less fuel. The new gas orifices in this field-installed kit make the necessary adjustment for high altitude applications. They restore the optimal fuel to air mixture and maintain healthy combustion on altitudes above 2000 ft (610 m).

NOTE: Typical natural gas heating value ranges from 975 to 1050 Btu/ft^3 at sea level nationally. The heating value goes down approximately 1.7% per every thousand feet elevation. Standard factory orifices can typically be used up to 2000 ft (610 m) elevation without any operational issues.

Flue discharge deflector (RGV units only)

The flue discharge deflector is a useful accessory when flue gas recirculation is a concern. By venting the flue discharge upwards, the deflector minimizes the chance for a neighboring unit to intake the flue exhaust.

4 in. filter rack kit

The 4 in. filter rack accessory kit is designed to hold 4 in. MERV-8 or MERV-13 filters. Filters not included in kit.

MERV-13 2 in. return air filters

This kit includes MERV-13 2 in. filters (qty 4) to accommodate unit filter rack size.

MERV-8 2 in. return air filters

This kit includes MERV-8 2 in. filters (qty 4) to accommodate unit filter rack size.

UV-C ultraviolet lamp kit

High-output, low temperature ultraviolet lamp. Accessory kit includes lamp, interlock switch, mounting brackets, necessary wires, wire ties, screws and labels to field install kit in unit return air plenum. Separate dedicated 115v power source required. See appropriate installation instructions.

Note: UV-C kit can not be used on units with Hot Gas Re-Heat system.

Phase monitor protection

The Phase Monitor Control will monitor the sequence of three phase electrical system to provide a phase reversal protection; and monitor the three phase voltage inputs to provide a phase loss protection for the three phase device. It will work on either a Delta or Wye power connection.

Winter start kit

The winter start kit extends the low ambient limit of your rooftop to 25°F (–4°C). The kit bypasses the low pressure switch, preventing nuisance tripping of the low pressure switch. Other low ambient precautions may still be prudent.

Low ambient controller

The low ambient controller is a head pressure controller kit that is designed to maintain the unit's condenser head pressure during periods of low ambient cooling operation. This device should be used as an alternative to economizer free cooling when economizer usage is either not appropriate or desired. The low ambient controller will either cycle the outdoor fan motors or operate them at reduced speed to maintain the unit operation, depending on the model. This controller allows cooling operation down to 0°F (–18°C) ambient conditions.

NOTE: 0°F (–18°C) is standard on size 150 models.

Roof curb (14 in./356 mm or 24 in./610 mm)

Full perimeter roof curb with exhaust capability provides separate air streams for energy recovery from the exhaust air without supply air contamination.

Filter status indicator accessory

Monitors static pressure across supply and exhaust filters and provides indication when filters become clogged.

Power exhaust

Superior internal building pressure control. This field-installed accessory may eliminate the need for costly, external pressure control fans.

Manual OA damper

Manual outdoor air dampers are an economical way to bring in ventilation air. The dampers are available in 25% and 50% versions.

NOTE: See application tip "ROOFTOP-18-01" prior to use of this damper on 090-180 size models.

Motorized 2-position damper

The 2-position, motorized outdoor air damper admits up to 100% outside air. Using reliable, gear-driven technology, the 2-position damper opens to allow ventilation air

Options and accessories (cont)

and closes when the rooftop stops, stopping unwanted infiltration.

NOTE: See application tip “ROOFTOP-18-01” prior to use of this damper on 090-180 size models.

Electric heaters

A full-line of field-installed accessory heaters are offered. The heaters are very easy to use, install and are all pre-engineered and certified.

Time Guard II control circuit

This accessory protects your compressor by preventing short-cycling in the event of some other failure, prevents the compressor from restarting for 30 seconds after stopping.

Disconnect switch bracket

Provides a pre-engineered and sized mounting bracket for applications requiring a unit mounted fused and non-fused disconnect of greater than 100 amps. Bracket assures that no damage will occur to coils when mounting with screws and other fasteners (180 size only).

OPTIONS AND ACCESSORY WEIGHTS[a]

OPTION / ACCESSORY NAME	RGV/RAV UNIT WEIGHT									
	090		102		120		150		180	
	lb	kg	lb	kg	lb	kg	lb	kg	lb	kg
Hot Gas Re-Heat System[b]	25	12	34	16	34	16	34	16	55	25
Power Exhaust — Vertical	75	34	75	34	75	34	75	34	85	39
Power Exhaust — Horizontal	30	14	30	14	30	14	30	14	75	34
EconoMi$er® (X or IV)	55	25	55	25	55	25	55	25	85	39
2-Position Damper	58	26	58	26	58	26	58	26	65	29
Manual Damper	18	8	18	8	18	8	18	8	25	11
Medium Gas Heat (RGV units only)	15	7	15	7	18	8	18	8	18	8
High Gas Heat (RGV units only)	30	14	30	14	27	12	27	12	36	16
Hail Guard (louvered)	17	8	17	8	17	8	17	8	44	20
Cu/Cu Condenser Coil	85	39	85	39	100	46	150	68	180	82
Cu/Cu Evaporator Coil	50	23	100	46	100	46	100	46	120	55
Roof Curb (14 in. curb)	143	65	143	65	143	65	143	65	180	82
Roof Curb (24 in. curb)	245	112	245	112	245	112	245	112	255	116
CO_2 Sensor	2	1	2	1	2	1	2	1	2	1
Flue Discharge Deflector	7	3	7	3	7	3	7	3	7	3
Optional Indoor Motor[c]	10	5	10	5	10	5	15	7	0	0
Low Ambient Controller	9	4	9	4	9	4	9	4	9	4
Winter Start Kit	5	2	5	2	5	2	5	2	5	2
Return Air Smoke Detector	7	3	7	3	7	3	7	3	7	3
Supply Air Smoke Detector	7	3	7	3	7	3	7	3	7	3
Fan Filter Switch	2	1	2	1	2	1	2	1	2	1
Non-Fused Disconnect	15	7	15	7	15	7	15	7	15	7
Powered Convenience Outlet	36	16	36	16	36	16	36	16	36	16
Unpowered Convenience Outlet	4	2	4	2	4	2	4	2	4	2
Enthalpy Sensor	2	1	2	1	2	1	2	1	2	1
Differential Enthalpy Sensor	3	1	3	1	3	1	3	1	3	1

NOTE(S):
a. Where multiple variations are available, the heaviest combination is listed.
b. For Hot Gas Re-Heat system, add Low Ambient controller weight.
c. Add the Optional Indoor Motor weight to the weight of the base unit.

RGV090-120 BASE UNIT DIMENSIONS

NOTES:

1. DIMENSIONS ARE IN INCHES, DIMENSIONS IN [ ] ARE IN MILLIMETERS.
2. CENTER OF GRAVITY
3. DIRECTION OF AIR FLOW
4. ALL VIEW DRAWN USING 3RD ANGLE

UNIT	OUTDOOR COIL TYPE	J	K	H
RGV-090	RTPF	41 1/4 [1048]	33 3/4 [857]	15 7/8 [403]
RGV-102	RTPF	49 3/8 [1253]	36 3/8 [925]	15 7/8 [403]
RGV-120	RTPF	49 3/8 [1253]	36 3/8 [925]	15 7/8 [403]
RTPF - ROUND TUBE, PLATE FIN (COPPER/ALUM)				

THIS DOCUMENT IS THE PROPERTY OF CARRIER CORPORATION AND IS DELIVERED UPON THE EXPRESS CONDITION THAT THE CONTENTS WILL NOT BE DISCLOSED OR USED WITHOUT WRITTEN CONSENT.

SUBMISSION OF THESE DRAWINGS OR DOCUMENTS DOES NOT CONSTITUTE PART PERFORMANCE OR ACCEPTANCE OF CONTRACT.

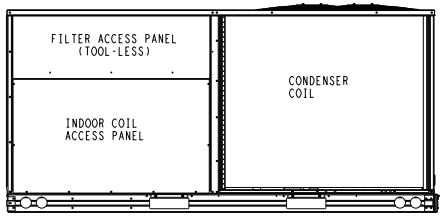

BACK

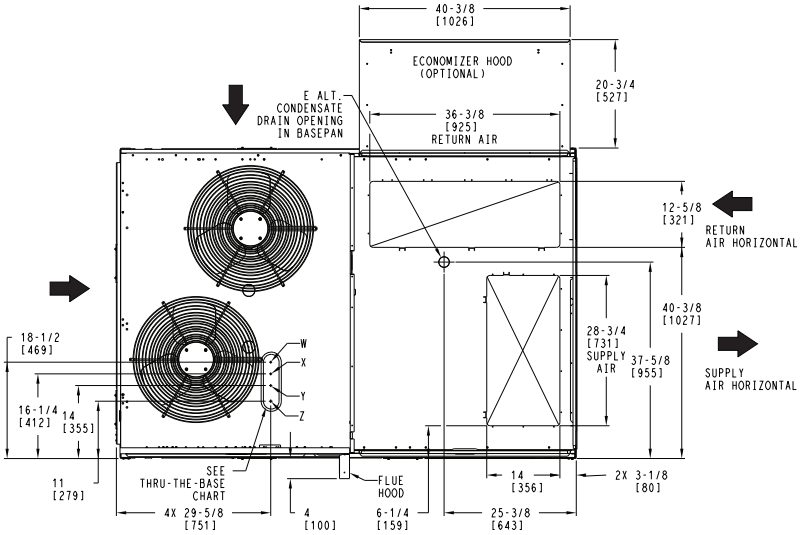

TOP

	CONNECTION SIZES
A	1 3/8" [35] DIA FIELD POWER SUPPLY HOLE
B	2 1/2" [64] DIA POWER SUPPLY KNOCKOUT
C	1 3/4" [51] DIA GAUGE ACCESS PLUG
D	7/8" [22] DIA FIELD CONTROL WIRING HOLE
E	3/4"-14 NPT CONDENSATE DRAIN
F	1/2"-14 NPT GAS CONNECTION 3/4"-14 NPT GAS CONNECTION
G	2 " [51] DIA POWER SUPPLY KNOCK-OUT

THRU-THE-BASE CHART (FIELD INST)

THESE HOLES REQUIRED FOR USE WITH ACCY KITS:
CRBTMPWR002A01: GAS THRU CURB
CRBTMPWR004A01: GAS THRU BASEPAN

	THREADED CONDUIT SIZE	WIRE USE	REQ'D HOLE SIZES (MAX.)
W	1/2"	ACC.	7/8" [22.2]
X	1/2"	24V	7/8" [22.2]
Y	1 1/4" (002,004)	POWER	1 3/4" [44.4]
Z *	(004) 3/4" FPT	GAS	1 3/4" [44.4]
*	(002) PROVIDES 3/4" FPT THRU CURB FLANGE & FITTING. HOLE SIZE: 2" [50.8]		

THRU-THE-BASE CHART (FIOP)

FOR "THRU-THE-BASEPAN" FACTORY OPTION, FITTINGS FOR ONLY X, Y, & Z ARE PROVIDED. **

**	FOR BELOW LISTED MODELS, A FIELD SUPPLIED 1/2" ADAPTER IS REQUIRED BETWEEN BASE PAN FITTING AND GAS VALVE: RGV-090, RGV-102

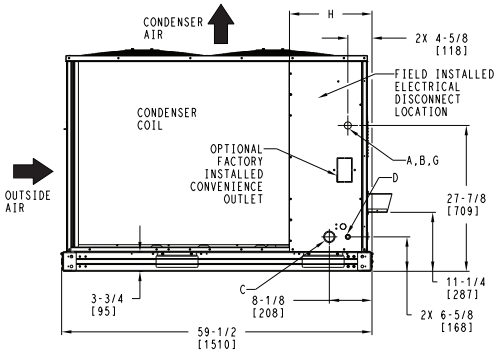

LEFT

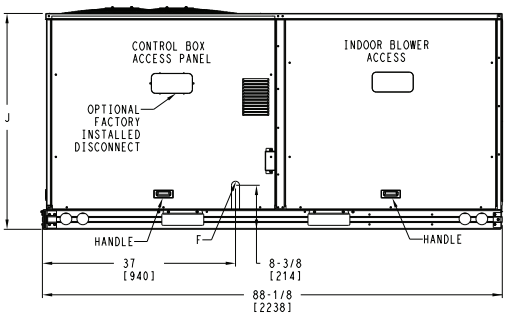

FRONT

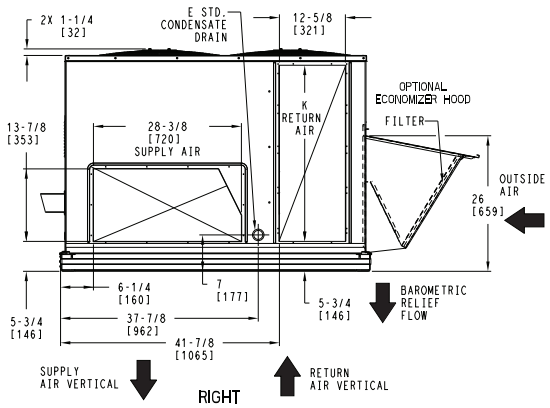

RIGHT

ITC CLASSIFICATION	SHEET	DATE	SUPERCEDES			REV
U.S. ECCN:NSR	1 OF 3	06/01/21	-	RGV 090-120 SINGLE ZONE ELECTRICAL COOLING WITH GAS HEAT	48TM006407	A

RGV090-120 BASE UNIT DIMENSIONS (cont)

THIS DOCUMENT IS THE PROPERTY OF CARRIER CORPORATION AND IS DELIVERED UPON THE EXPRESS CONDITION THAT THE CONTENTS WILL NOT BE DISCLOSED OR USED WITHOUT WRITTEN CONSENT.

SUBMISSION OF THESE DRAWINGS OR DOCUMENTS DOES NOT CONSTITUTE PART PERFORMANCE OR ACCEPTANCE OF CONTRACT.

UNIT	OUTDOOR COIL TYPE	STD. UNIT WEIGHT ***		CORNER WEIGHT (A)		CORNER WEIGHT (B)		CORNER WEIGHT (C)		CORNER WEIGHT (D)		C.G.		
		LBS.	KG.	LBS.	KG.	LBS.	KG.	LBS.	KG.	LBS.	KG.	X	Y	Z
RGV-090	RTPF	787	357	181	82	150	68	207	94	249	113	40 [1016]	34 1/2 [876]	19 3/8 [492]
RGV-102	RTPF	868	394	197	89	160	73	229	104	282	128	39 1/2 [1003]	35 [889]	18 5/8 [473]
RGV-120	RTPF	878	398	213	97	175	80	221	100	268	121	39 7/8 [1013]	33 1/4 [841]	18 1/2 [470]
RTPF - ROUND TUBE, PLATE FIN (COPPER/ALUM)														

*** STANDARD UNIT WEIGHT IS WITH LOW GAS HEAT AND WITHOUT PACKAGING.
FOR OTHER OPTIONS AND ACCESSORIES, REFER TO THE PRODUCT DATA CATALOG.

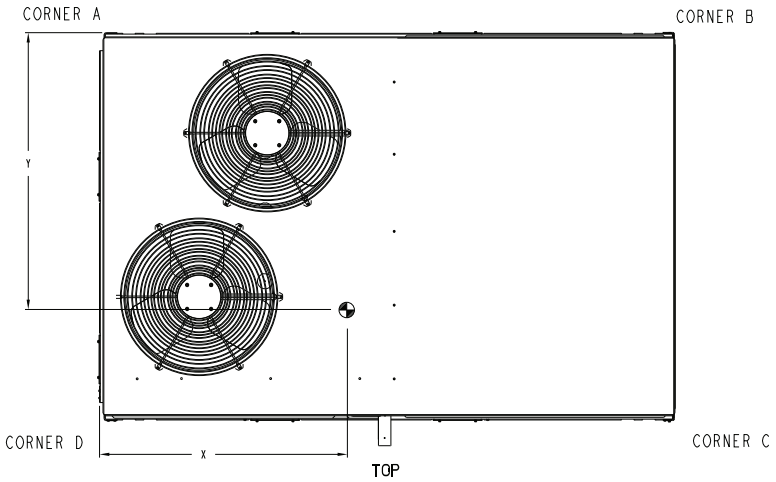

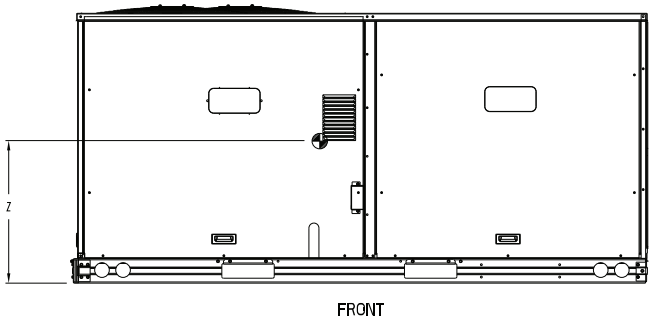

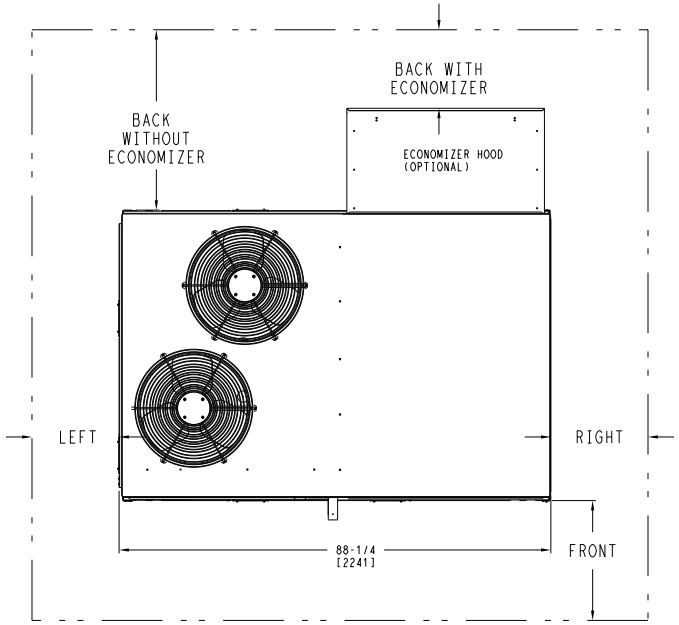

NOTE:

1. FOR ALL MINIMUM CLEARANCES LOCAL CODES OR JURISDICTIONS MAY PREVAIL.

CLEARANCE			
	SERVICE WITH:	SERVICE WITH:	OPERATING
SURFACE	CONDUCTIVE BARRIER	NONCONDUCTIVE BARRIER	CLEARANCE
FRONT	48 [1219mm]	36 [914mm]	18 [457mm]
LEFT	48 [1219mm]	42 [1067mm]	18 [457mm]
BACK W/O ECON	48 [1219mm]	42 [1067mm]	18 [457mm]
BACK W/ECON	36 [914mm]	36 [914mm]	18 [457mm]
RIGHT	36 [914mm]	36 [914mm]	18 [457mm]
TOP	72 [1829mm]	72 [1829mm]	72 [1829mm]

ITC CLASSIFICATION	SHEET	DATE	SUPERCEDES			REV
U.S. ECCN:NSR	2 OF 3	06/01/21	-	RGV 090-120 SINGLE ZONE ELECTRICAL COOLING WITH GAS HEAT	48TM006407	A

RGV090-120 BASE UNIT DIMENSIONS (cont)

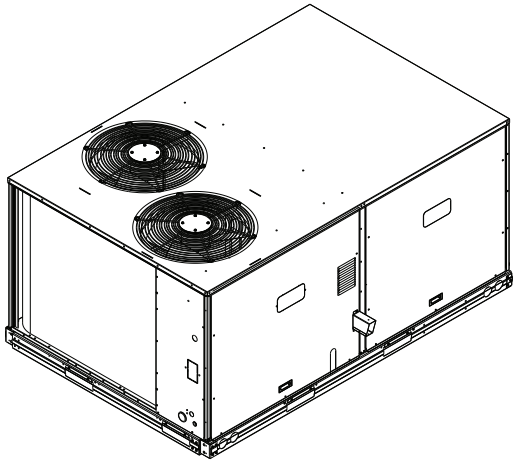

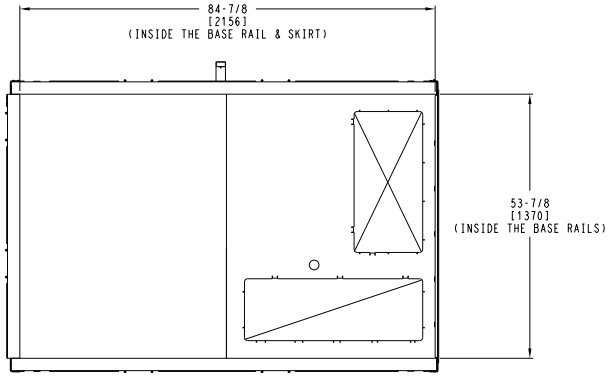

INSIDE BASERAIL DIMENSIONS

BOTTOM

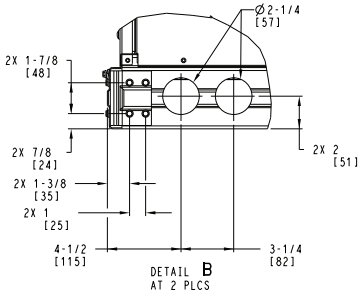

DETAIL B
AT 2 PLCS

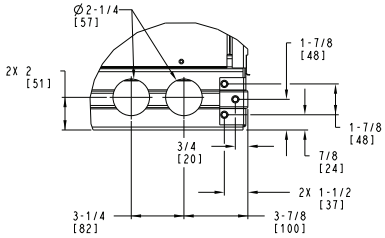

DETAIL C
AT 2 PLCS

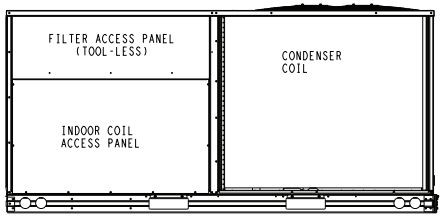

BACK

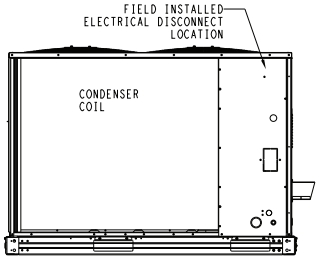

LEFT

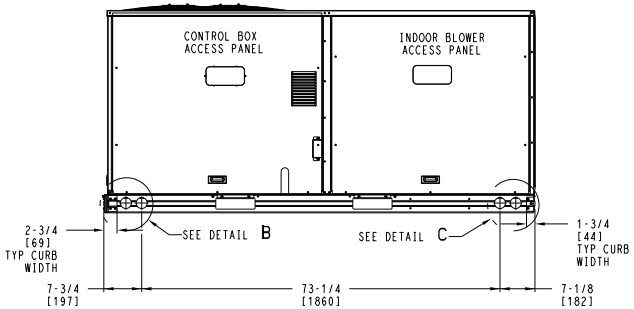

FRONT

THIS DOCUMENT IS THE PROPERTY OF CARRIER CORPORATION AND IS DELIVERED UPON THE EXPRESS CONDITION THAT THE CONTENTS WILL NOT BE DISCLOSED OR USED WITHOUT WRITTEN CONSENT.

SUBMISSION OF THESE DRAWINGS OR DOCUMENTS DOES NOT CONSTITUTE PART PERFORMANCE OR ACCEPTANCE OF CONTRACT.

ITC CLASSIFICATION	SHEET	DATE	SUPERCEDES			REV
U.S. ECCN:NSR	3 OF 3	06/01/21	-	RGV 090-120 SINGLE ZONE ELECTRICAL COOLING WITH GAS HEAT	48TM006407	A

RGV150 BASE UNIT DIMENSIONS

NOTES:

1. DIMENSIONS ARE IN INCHES, DIMENSIONS IN [ ] ARE IN MILLIMETERS.
2. CENTER OF GRAVITY
3. DIRECTION OF AIR FLOW
4. ALL VIEW DRAWN USING 3RD ANGLE

UNIT	OUTDOOR COIL TYPE	H
RGV-150	RTPF	15 7/8 [403]
RTPF - ROUND TUBE, PLATE FIN (COPPER/ALUM)		

THIS DOCUMENT IS THE PROPERTY OF CARRIER CORPORATION AND IS DELIVERED UPON THE EXPRESS CONDITION THAT THE CONTENTS WILL NOT BE DISCLOSED OR USED WITHOUT WRITTEN CONSENT.

SUBMISSION OF THESE DRAWINGS OR DOCUMENTS DOES NOT CONSTITUTE PART PERFORMANCE OR ACCEPTANCE OF CONTRACT.

	CONNECTION SIZES
A	1 3/8" [35] DIA FIELD POWER SUPPLY HOLE
B	2 1/2" [64] DIA POWER SUPPLY KNOCKOUT
C	1 3/4" [51] DIA GAUGE ACCESS PLUG
D	7/8" [22] DIA FIELD CONTROL WIRING HOLE
E	3/4"-14 NPT CONDENSATE DRAIN
F	3/4"-14 NPT GAS CONNECTION
G	2" [51] DIA POWER SUPPLY KNOCK-OUT

THRU-THE-BASE CHART THESE HOLES REQUIRED FOR USE CRBTMPWR002A01,004A01			
	THREADED CONDUIT SIZE	WIRE USE	REQ'D HOLE SIZES (MAX.)
W	1/2"	ACC.	7/8" [22.2]
X	1/2"	24V	7/8" [22.2]
Y	1 1/4" (002,004)	POWER	1 3/4" [44.4]
Z*	(004) 3/4" FPT	GAS	1 5/8" [41.3]
	FOR "THRU-THE-BASEPAN" FACTORY OPTION, FITTINGS FOR ONLY X, Y, & Z ARE PROVIDED		
*	(002) PROVIDES 3/4" FPT THRU CURB FLANGE & FITTING.		

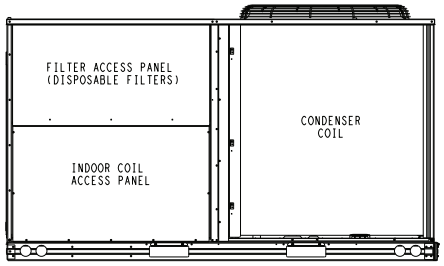

BACK

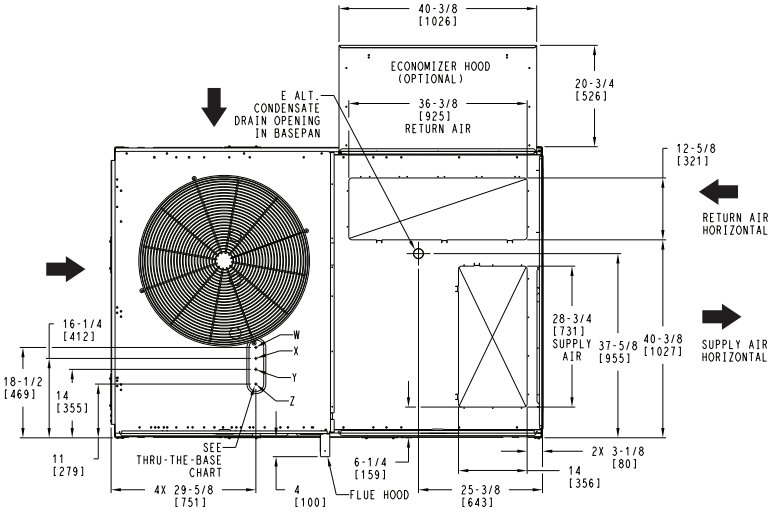

TOP

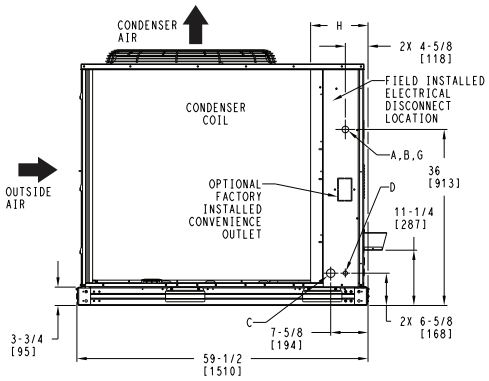

LEFT

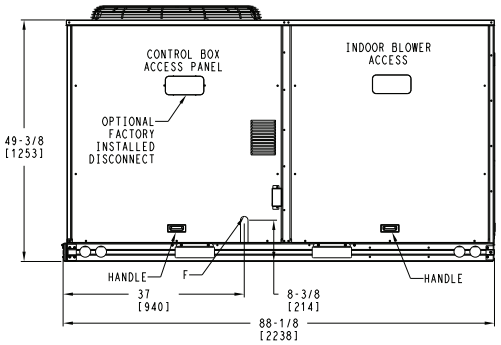

FRONT

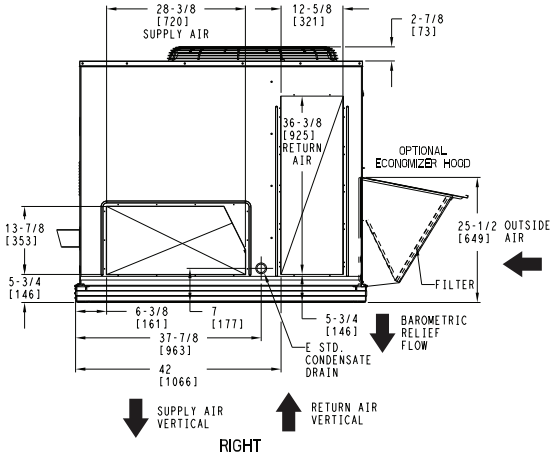

RIGHT

ITC CLASSIFICATION	SHEET	DATE	SUPERCEDES			REV
U.S. ECCN:NSR	1 OF 3	06/01/21	-	RGV-150 SINGLE ZONE ELECTRICAL COOLING WITH GAS HEAT	48TM006409	-

RGV150 BASE UNIT DIMENSIONS (cont)

THIS DOCUMENT IS THE PROPERTY OF CARRIER CORPORATION AND IS DELIVERED UPON THE EXPRESS CONDITION THAT THE CONTENTS WILL NOT BE DISCLOSED OR USED WITHOUT WRITTEN CONSENT.

SUBMISSION OF THESE DRAWINGS OR DOCUMENTS DOES NOT CONSTITUTE PART PERFORMANCE OR ACCEPTANCE OF CONTRACT.

UNIT	OUTDOOR COIL TYPE	STD. UNIT WEIGHT***		CORNER WEIGHT (A)		CORNER WEIGHT (B)		CORNER WEIGHT (C)		CORNER WEIGHT (D)		C.G.		
		LBS.	KG.	LBS.	KG.	LBS.	KG.	LBS.	KG.	LBS.	KG.	X	Y	Z
RGV-150	RTPF	1041	472	243	110	195	88	269	122	335	152	39 1/4 [997]	34 1/2 [876]	21 7/8 [556]
RTPF - ROUND TUBE, PLATE FIN (COPPER/ALUM)														

*** STANDARD UNIT WEIGHT IS WITH LOW GAS HEAT AND WITHOUT PACKAGING.
FOR OTHER OPTIONS AND ACCESSORIES, REFER TO THE PRODUCT DATA CATALOG.

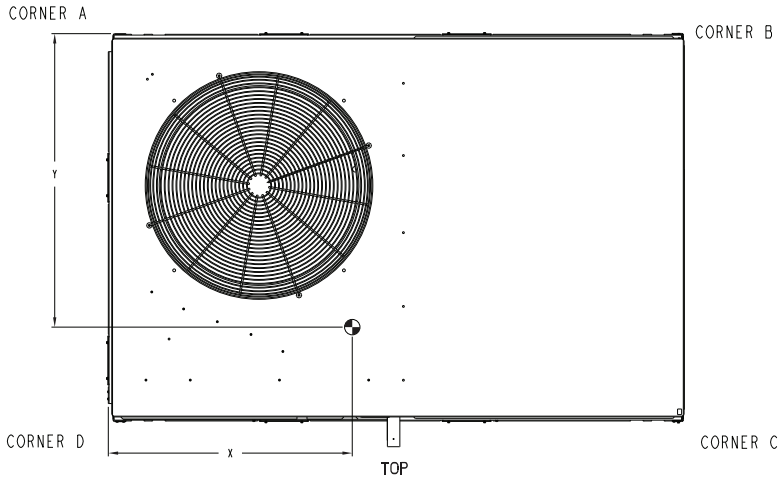

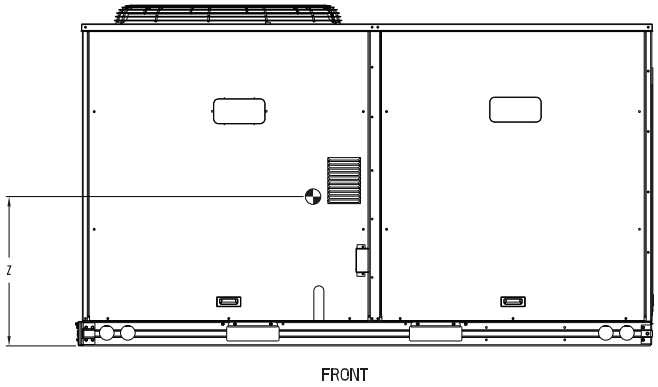

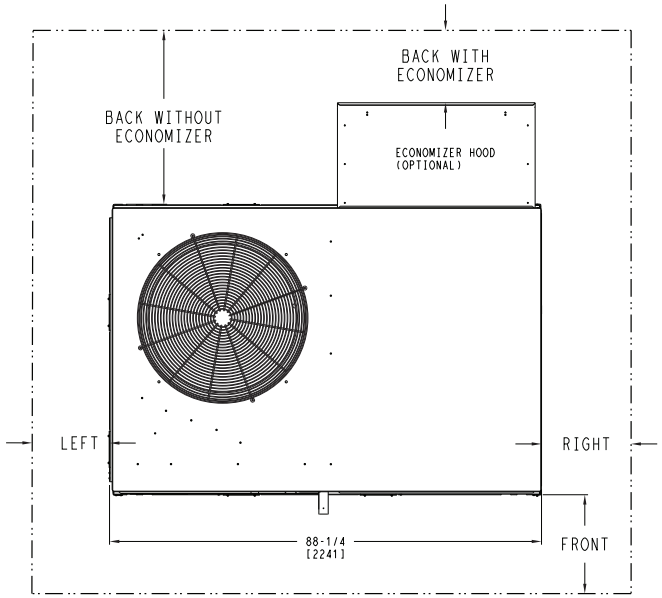

NOTE:

1. FOR ALL MINIMUM CLEARANCES LOCAL CODES OR JURISDICTIONS MAY PREVAIL.

CLEARANCE			
	SERVICE WITH:	SERVICE WITH:	OPERATING
SURFACE	CONDUCTIVE BARRIER	NONCONDUCTIVE BARRIER	CLEARANCE
FRONT	48 [1219mm]	36 [914mm]	18 [457mm]
LEFT	48 [1219mm]	42 [1067mm]	18 [457mm]
BACK W/O ECON	48 [1219mm]	42 [1067mm]	18 [457mm]
BACK W/ECON	36 [914mm]	36 [914mm]	18 [457mm]
RIGHT	36 [914mm]	36 [914mm]	18 [457mm]
TOP	72 [1829mm]	72 [1829mm]	72 [1829mm]

ITC CLASSIFICATION	SHEET	DATE	SUPERCEDES			REV
U.S. ECCN:NSR	2 OF 3	06/01/21	-	RGV-150 SINGLE ZONE ELECTRICAL COOLING WITH GAS HEAT	48TM006409	-

RGV150 BASE UNIT DIMENSIONS (cont)

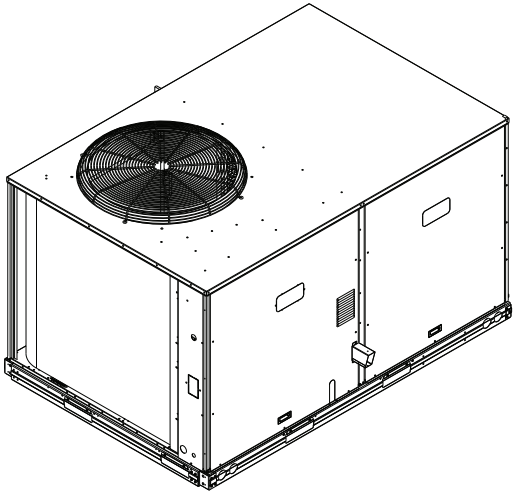

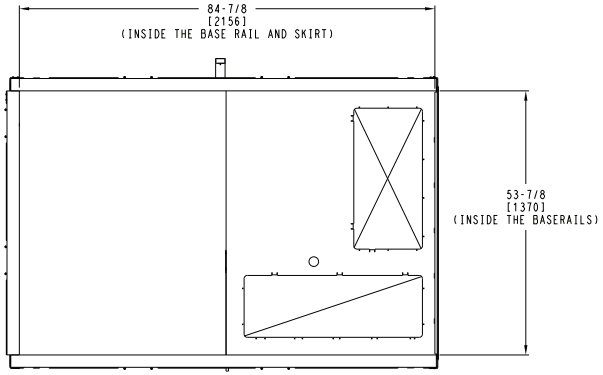

INSIDE BASERAIL DIMENSIONS
BOTTOM

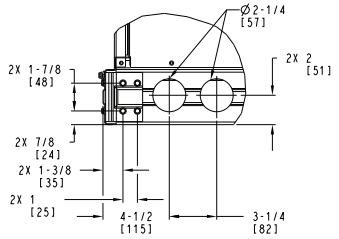

DETAIL B
AT 2 PLCS

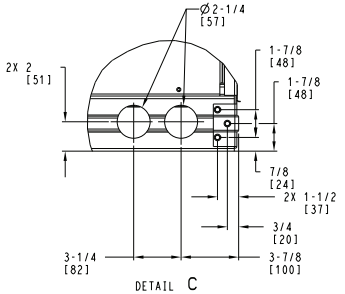

DETAIL C
AT 2 PLCS

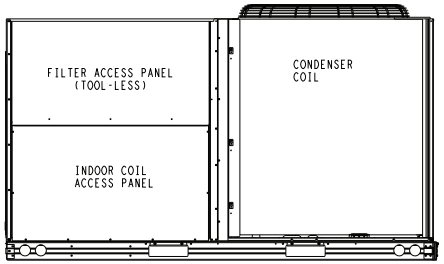

BACK

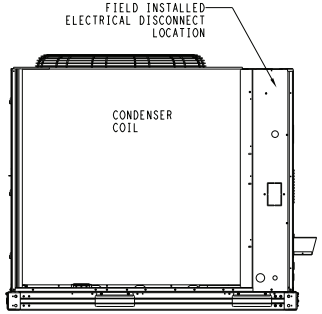

LEFT

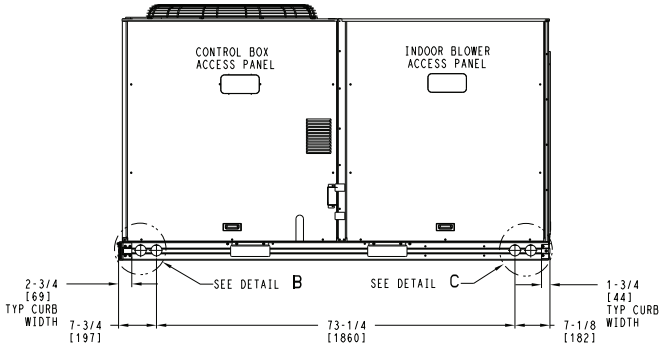

FRONT

THIS DOCUMENT IS THE PROPERTY OF CARRIER CORPORATION AND IS DELIVERED UPON THE EXPRESS CONDITION THAT THE CONTENTS WILL NOT BE DISCLOSED OR USED WITHOUT WRITTEN CONSENT.

SUBMISSION OF THESE DRAWINGS OR DOCUMENTS DOES NOT CONSTITUTE PART PERFORMANCE OR ACCEPTANCE OF CONTRACT.

ITC CLASSIFICATION	SHEET	DATE	SUPERCEDES			REV
U.S. ECCN:NSR	3 OF 3	06/01/21	-	RGV-150 SINGLE ZONE ELECTRICAL COOLING WITH GAS HEAT	48TM006409	-

RGV180 BASE UNIT DIMENSIONS

NOTES:

1. DIMENSIONS ARE IN INCHES, DIMENSIONS IN [ ] ARE IN MILLIMETERS.
2. CENTER OF GRAVITY
3. DIRECTION OF AIR FLOW

THIS DOCUMENT IS THE PROPERTY OF CARRIER CORPORATION AND IS DELIVERED UPON THE EXPRESS CONDITION THAT THE CONTENTS WILL NOT BE DISCLOSED OR USED WITHOUT WRITTEN CONSENT.

SUBMISSION OF THESE DRAWINGS OR DOCUMENTS DOES NOT CONSTITUTE PART PERFORMANCE OR ACCEPTANCE OF CONTRACT.

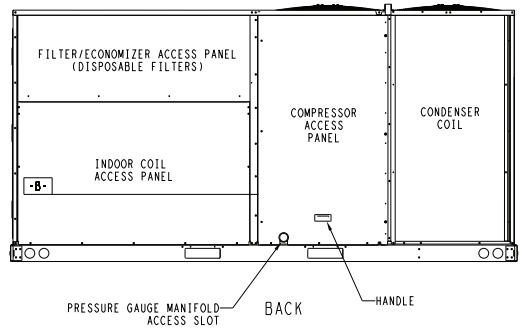

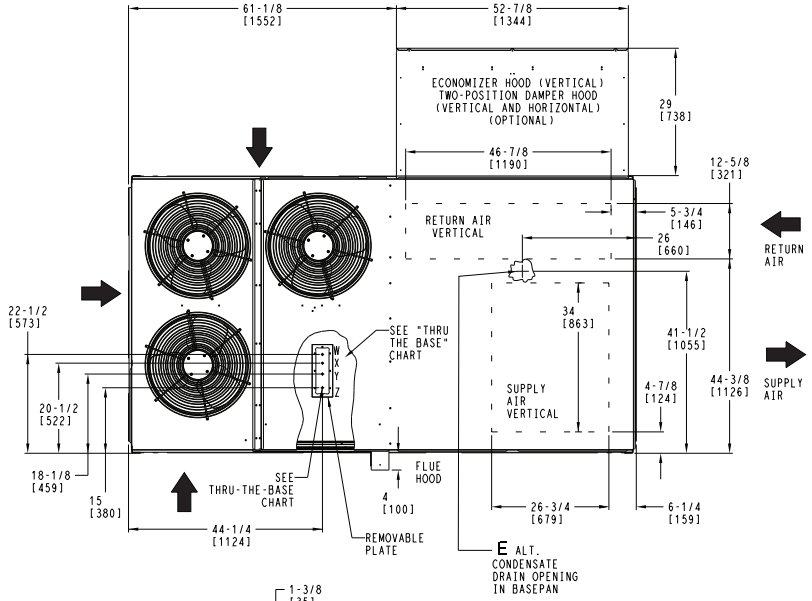

	CONNECTION SIZES
B	2 1/2" [64] DIA POWER SUPPLY HOLE
D	7/8" [22] DIA FIELD CONTROL WIRING HOLE
E	3/4"-14 NPT CONDENSATE DRAIN
F	7/8" [22] DIA FIELD CONVENIENCE OUTLET HOLE
G	3/4"-14 NPT GAS CONNECTION

THRU-THE-BASE CHART
THESE HOLES REQUIRED FOR USE
CRBTMPWR005A00,006A00,007A00

ACCESSORY NO.		THREADED CONDUIT SIZE	WIRE USE	REQ'D HOLE SIZES (MAX.)
005	W	1/2"	ACC.	7/8" [22.2]
	X	1/2"	24V	7/8" [22.2]
	Y	1 1/4"	POWER	1 1/2" [38.1]
	Z	3/4" PIPE	GAS	1 3/4" [44.5]
006	W	1/2"	ACC.	7/8" [22.2]
	X	1/2"	24V	7/8" [22.2]
	Y	1 1/2"	POWER	2" [50.8]
	Z	3/4" PIPE	GAS	1 3/4" [44.5]
007	W	1/2"	ACC.	7/8" [22.2]
	X	1/2"	24V	7/8" [22.2]
	Y	2"	POWER	2 1/2" [63.5]
	Z	3/4" PIPE	GAS	1 3/4" [44.5]
	FOR "THRU-THE-BASEPAN" FACTORY OPTION, FITTINGS FOR X & Y ARE PROVIDED AS SPECIFIED ON "006".			

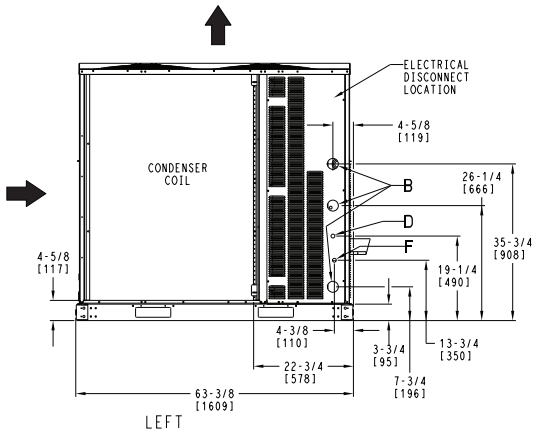

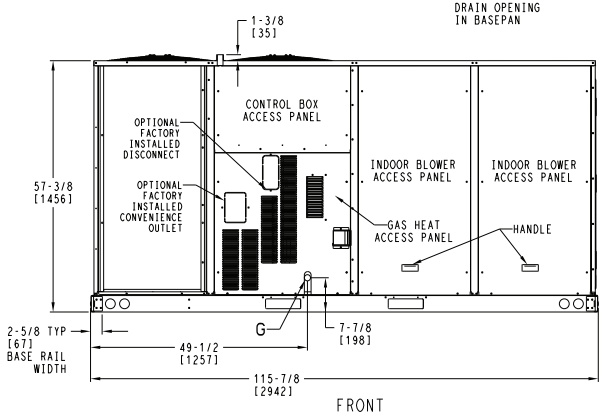

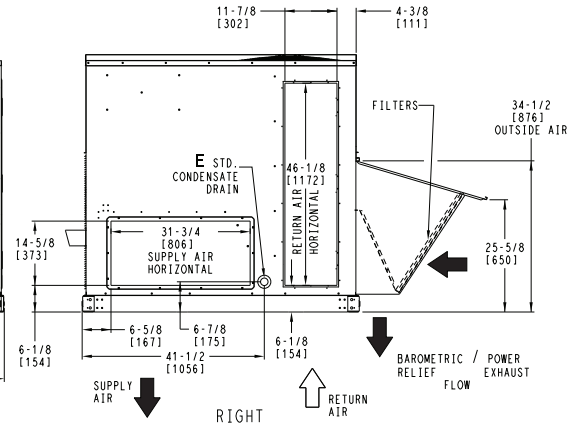

ITC CLASSIFICATION	SHEET	DATE	SUPERCEDES			REV
U.S. ECCN:NSR	1 OF 2	06/28/22	06/17/21	RGV 180 SINGLE ZONE ELECTRICAL COOLING WITH GAS HEAT	50TM002140	A

RGV180 BASE UNIT DIMENSIONS (cont)

UNIT	STD UNIT WEIGHT		CORNER WEIGHT (A)		CORNER WEIGHT (B)		CORNER WEIGHT (C)		CORNER WEIGHT (D)		C.G.		
	LBS.	KG.	LBS.	KG.	LBS.	KG.	LBS.	KG.	LBS.	KG.	X	Y	Z
RGV-180	1408	639	373	169	341	155	332	150	362	164	55 3/8 [1407]	31 1/4 [794]	21 1/8 [537]

STANDARD UNIT WEIGHT IS WITH LOW HEAT & WITHOUT PACKAGING.
FOR OPTIONS & ACCESSORIES, REFER TO THE PRODUCT DATA CATALOG.

THIS DOCUMENT IS THE PROPERTY OF CARRIER CORPORATION AND IS DELIVERED UPON THE EXPRESS CONDITION THAT THE CONTENTS WILL NOT BE DISCLOSED OR USED WITHOUT WRITTEN CONSENT.

SUBMISSION OF THESE DRAWINGS OR DOCUMENTS DOES NOT CONSTITUTE PART PERFORMANCE OR ACCEPTANCE OF CONTRACT.

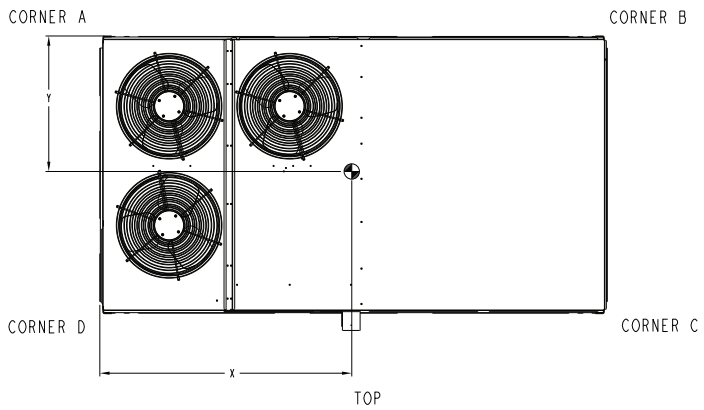

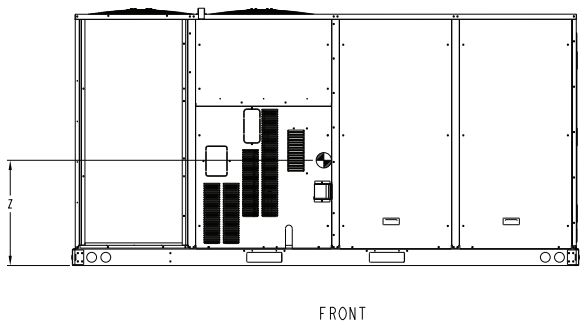

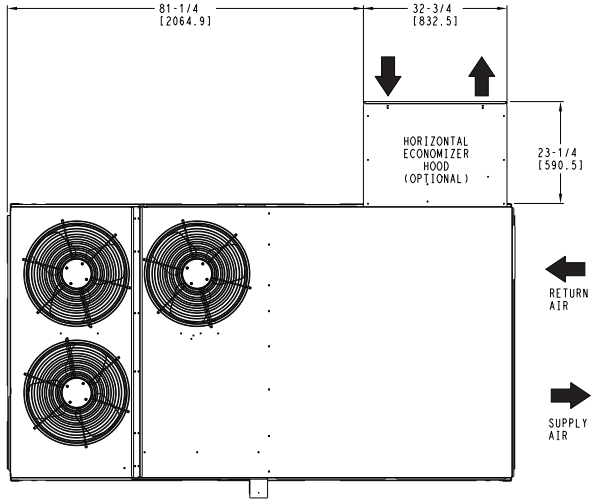

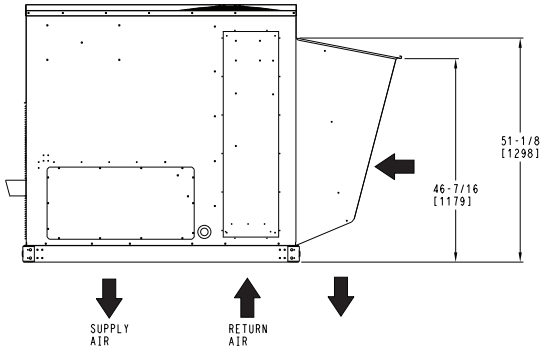

HORIZONTAL ECONOMIZER

ITC CLASSIFICATION	SHEET	DATE	SUPERCEDES			REV
U.S. ECCN:NSR	2 OF 2	06/28/22	06/17/21	RGV 180 SINGLE ZONE ELECTRICAL COOLING WITH GAS HEAT	50TM002140	A

Base unit dimensions (cont)

RGV180 BASE UNIT DIMENSIONS — CLEARANCE

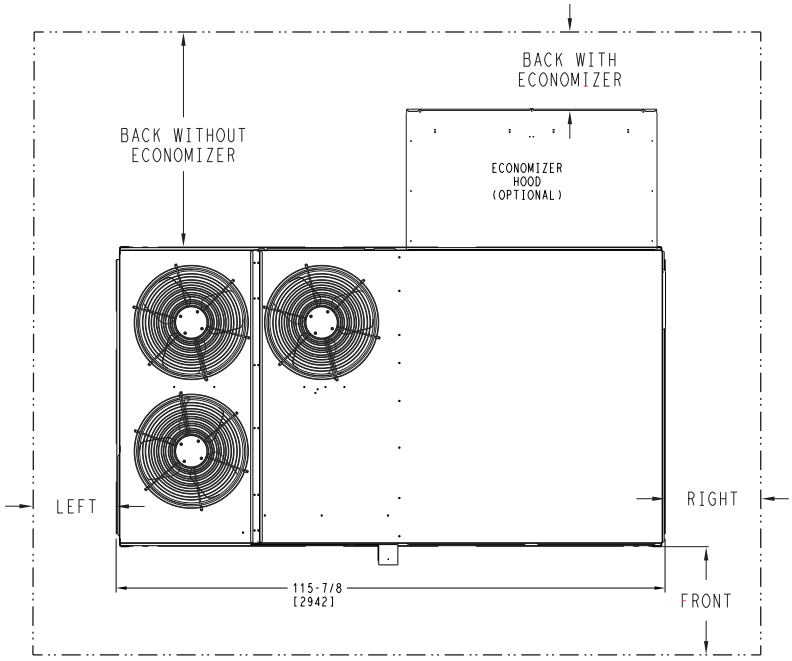

CLEARANCE[a, b]			
SURFACE	**Service with Conductive Barrier**	**Service with Non-conductive Barrier**	**Operating Clearance**
FRONT	48 in. (1219 mm)	36 in. (914 mm)	18 in. (457 mm)
LEFT	48 in. (1219 mm)	42 in. (1067 mm)	18 in. (457 mm)
BACK W/O ECONOMIZER	48 in. (1219 mm)	42 in. (1067 mm)	18 in. (457 mm)
BACK W/ ECONOMIZER	36 in. (914 mm)	36 in. (914 mm)	18 in. (457 mm)
RIGHT	36 in. (914 mm)	36 in. (914 mm)	18 in. (457 mm)
LEFT	72 in. (1829 mm)	72 in. (1829 mm)	72 in. (1829 mm)

NOTE(S):
a. For all minimum clearances local codes or jurisdictions may prevail.
b. See page 18 for RGV090-120 clearances. See page 21 for RGV150 clearances.