RHV090-150
Product Specifications

SINGLE PACKAGE HEAT PUMP ROOFTOP UNITS WITH X-VANE™ FAN TECHNOLOGY WITH OPTIONAL ELECTRIC HEAT (RHV) 7.5-12.5 TONS

RHV090-150

The new 7.5 to 12.5 ton RHV090-150 packaged heat pump rooftop units (RTU) with X-Vane Fan Technology provides value added benefits never seen in this type of equipment before. New major design features include:

- Patented, industry's first efficient indoor fan system using Vane Axial fan with electronically commutated variable speed motor. As compared to today's typically used belt drive with forward curve fans, system provides reliable operation with:
  - 75% fewer moving parts
  - No fan belts, pulleys, shaft, and shaft bearings
  - 40% more efficient than traditional belt drive forward curve fans
  - Slow ramp up capability for better sound and comfort control
  - Internal protection from phase reversal and phase loss situations
  - High external static capability
  - Slide out blower assembly design
- Reliable 2 stage cooling with tandem scroll compressors technology, fully active evaporator coil, and mixed air temperature protection on all models
- New unit control board with intuitive indoor fan adjustment that uses simple dial and switch adjustments
- Reliable copper tube/aluminum fin condenser coil with 5/16 in. tubing to help reduce refrigerant charge and reduce weight versus prior designs

RHV units up to 12.5 tons are designed to fit on our roof curbs that were installed back to 1989, which makes replacement easy and eliminates the need for curb adapters, changing utility connections or supporting curb overhang situations.

2 speed Vane Axial indoor fan speed control helps deliver IEERs up to 15.0.

All models are capable of either vertical or horizontal airflow without dedicated models or field-installed kits. The 150 size models require a field installed supply air kit.

With "no-strip" screw collars, handled access panels, and more, the unit is easy to install, easy to maintain, and easy to use. Your new 7.5 to 12.5 ton RHV rooftop unit (RTU) provides optimum comfort and control from a packaged rooftop.

Installation ease

All RHV units are field-convertible to horizontal airflow, which makes it easy to adjust to unexpected jobsite complications. Lighter units make for easy replacement and aid in the structural approval process. Units have simple, fast plug-in connections to the standard integrated unit control board (UCB). Clearly labeled connections points to reduce installation time. Also, a large control box provides room to work.

Easy to maintain

With the new X-Vane Fan Vane Axial fan system and direct drive ECM motor, there is no longer a need to adjust or replace belts or pulleys as in past designs. This frees up maintenance, installation, and commissioning time.

Easy access handles provide quick and easy access to all normally serviced components. Our "no-strip" screw system has superior holding power and guides screws into position while preventing the screw from stripping the unit's metal.

Sloped, corrosion resistant composite drain pan sheds water; and won't rust.

Table of contents

	Page
Features/Benefits	1
Model number nomenclature	3
Capacity ratings	4
Physical data	6
Options and accessories	7
Base unit dimensions	11
Accessory dimensions	20
Performance data	22
Fan data	35
Electrical data	52
Typical wiring diagrams	70
Sequence of operation	77
Application data	79
Guide Specifications	80

Easy to use

The newly re-designed Unit Control Board puts all connections and troubleshooting points in one convenient place. Most low voltage connections are made to the same board and make it easy to access it. Setting up the fan is simple by an intuitive switch and rotary dial arrangement. RHV rooftops have high and low pressure switches, a new mixed air temperature switch, a filter drier, and 2-in. filters standard.

X-Vane Fan Technology

Direct drive X-Vane Fan Technology indoor fan system uses Vane Axial fan design and electrically commutated motors.

This new Vane Axial design over past belt drive systems has 75% fewer moving parts, uses up to 40% less energy and has no fan belts, blower bearings and shaft. Full fan and motor assembly also slides out for easier maintenance and service.

Features/Benefits

Value-added features include:

- Single point electrical connections
- 7.5 to 12.5 ton models use fixed TXV refrigerant metering devices
- Scroll compressors with internal line-break overload protection
- Units come with an easy access tool-less filter door. Filter track tilts out for filter removal and replacement. All filters are the same size in each unit

Operating efficiency and flexibility

These RHV packaged rooftops meet the Department of Energy (DOE) 2023 efficiency standard, as well as the latest ASHRAE (American Society of Heating, Refrigerating, and Air-Conditioning Engineers) 90.1 and IECC[1] (International Energy Conservation Code) minimum IEER efficiency requirements.

Field convertible airflow

All RHV 7.5 to 12.5 ton units are field-convertible to horizontal airflow, which makes it easy to adjust to unexpected jobsite complications. 12.5 ton models require a simple supply duct cover kit to field convert from factory vertical to horizontal.

1. IECC is a registered trademark of the International Code Council, Inc.

Model number nomenclature

RHV090-150 Model Number Nomenclature

MODEL SERIES	R	H	V	0	9	0	L	0	2	A	0	A	A	A
Position Number	1	2	3	4	5	6	7	8	9	10	11	12	13	14

R = Rooftop

H = Heat Pump with Electric Heat — Type

V = R-410A with X-Vane™ Fan — Standard Efficiency

090 = 90,000 BTUH = 7.5 Tons
102 = 102,000 BTUH = 8.5 Tons
120 = 120,000 BTUH = 10 Tons
150 = 150,000 BTUH = 12.5 Tons — Nominal Cooling Capacity

H = 208/230-3-60
L = 460-3-60
S = 575-3-60 — Voltage

0 = No Heat (Field-Installed Only) — Electric Heating Capacity

2 = Standard/Medium Static Direct Drive ECM with X-Vane Fan
3 = High Static Direct Drive ECM with X-Vane Fan
5 = Standard/Medium Static, Vertical Supply and Filter Status Switch
6 = High Static, Vertical Supply and Fliter Status Switch — Motor Option (Indoor Fan)

A = None
B = Low Leak Economizer with Barometric Relief, OA Temperature Sensor
E = Low Leak Economizer with Barometric Relief + CO_2 Sensor, OA Temperature Sensor
H = Low Leak Economizer with Barometric Relief and Enthalpy Sensor
L = Economizer with Barometric Relief + CO_2 Sensor, Enthalpy Sensor
U = Ultra Low Leak Economizer with Barometric Relief, OA Temperature Sensor
W = Ultra Low Leak Economizer with Barometric Relief, Enthalpy Sensor — Outdoor Air Options / Control

0A = Standard
4B = Non Fused Disconnect Switch
AA = Hinged Access Panels
AT = Un-Powered Convenience Outlet
BB = Powered Convenience Outlet
BP = Return Air Smoke Detector
BR = Supply Air Smoke Detector
CJ = Condensate Overflow Switch — Factory-Installed Options

A = Aluminum / Copper Cond and Evap Coil
B = Precoat Alum/Copper Cond with Alum / Copper Evap
C = E-Coated Alum/Copper Cond with Alum / Copper Evap
D = E-Coated Alum / Copper Cond and Evap
E = Copper/Copper Cond and Alum/Copper Evap
F = Copper/Copper Cond and Evap — Condenser / Evaporator Coil Configuration

A = Economizer controls for EconoMiZer® IV and others (except for factory-installed EconoMiZer X)
B = Economizer controls for factory-installed EconoMiZer X — Economizer Control

Capacity ratings

RHV AHRI Ratings

COOLING MODE							
UNIT	Cooling Stages	Nominal Capacity (tons)	Net Cooling Capacity (Btuh)	Total Power (kW)	EER	IEER with 2-Speed Indoor Fan Motor	AHRI Rating cfm
RHV090	2	7.5	86,000	7.7	11.20	15.0	3000
RHV102	2	8.5	96,000	8.7	11.00	15.0	3400
RHV120	2	10.0	118,000	10.7	11.00	15.0	4000
RHV150	2	12.5	144,000	13.6	10.60	15.0	5500

HEATING MODE					
UNIT	Heating, Low 17°F(–8°C) Ambient		Heating, High 47°F(8°C) Ambient		AHRI Rating cfm
	Net Capacity (Btuh)	COP	Net Capacity (Btuh)	COP	
RHV090	48,000	2.30	83,000	3.40	3000
RHV102	55,000	2.30	91,000	3.40	3400
RHV120	66,000	2.25	115,000	3.40	4000
RHV150	82,000	2.30	132,000	3.30	5500

NOTE(S):

1. Rated in accordance with AHRI Standards 340/360.
2. Rating are based on:
   Cooling Standard: 80°F (27°C) db, 67°F (19°C) wb indoor air temperature and 95°F (35°C) db outdoor air temperature.
   IEER Standard: A measure that expresses cooling part-load EER efficiency for commercial unitary air-conditioning and heat pump equipment on the basis of weighted operation at various load capacities.
3. All RHV units comply with ASHRAE 90.1-2019 (American Society of Heating, Refrigerating, and Air-Conditioning Engineers) and DOE-2023 (Department of Energy) Energy Standard for minimum IEER requirements.

LEGEND

AHRI — Air-Conditioning, Heating and Refrigeration Institute
COP — Coefficient of Performance
EER — Energy Efficiency Ratio
IEER — Integrated Energy Efficiency Ratio

Capacity ratings (cont)

Sound Rating Tables

RHV UNIT	COOLING STAGES	OUTDOOR SOUND (dB) AT 60Hz								
		A-Weighted	63	125	250	500	1000	2000	4000	8000
090	2	82	89.7	81.5	80.5	79.2	77.1	73.2	70.2	67.4
102	2	84	90.8	85.2	81.6	79.5	78.1	74.0	70.4	66.5
120	2	87	88.1	90.0	85.9	83.0	81.6	78.5	76.4	75.5
150	2	83	89.3	85.2	80.3	78.0	77.0	74.4	73.7	68.9

NOTES:

1. Outdoor sound data is measured in accordance with AHRI.
2. Measurements are expressed in terms of sound power. Do not compare these values to sound pressure values because sound pressure depends on specific environmental factors which normally do not match individual applications. Sound power values are independent of the environment and therefore more accurate.
3. A-weighted sound ratings filter out very high and very low frequencies, to better approximate the response of “average” human ear. A-weighted measurements for RHV units are taken in accordance with AHRI.

LEGEND

dB — Decibel

Minimum - Maximum Airflow Ratings (cfm) — Cooling Units and Accessory Electric Heat

UNIT	COOLING			ELECTRIC HEAT[a]	
	Minimum 2-Speed Airflow (Low Speed)	Minimum 2-Speed Airflow (High Speed)	Maximum Airflow cfm	Minimum Airflow cfm	Maximum Airflow cfm
RHV090	1350	2250	3750	2250	3750
RHV102	1275	2550	4250	2550	4250
RHV120	1800	3000	5000	3000	5000
RHV150	2250	3750	6250	3750	6250

NOTE(S):
a. Electric heat modules and single point kits are available as field-installed accessories for RHV units.

Physical data

RHV090-150 Physical Data

RHV UNIT	RHV090	RHV102	RHV120	RHV150
NOMINAL TONS	7.5	8.5	10.0	12.5
BASE UNIT OPERATING WT (lb)[a]	805	812	955	1250
REFRIGERATION SYSTEM				
No. Circuits/No. Compressors/Type	1/2/Scroll	1/2/Scroll	1/2/Scroll	1/2/Scroll
R-410A Charge (lb-oz)	17-8	21-2	21-5	24-14
Cooling Metering Device	TXV	TXV	TXV	TXV
Heating Metering Device	TXV	TXV	TXV	TXV
High-Pressure Trip/Reset (psig)	630/505	630/505	630/505	630/505
Loss of Charge Trip/Reset	27/44	27/44	27/44	27/44
EVAPORATOR COIL				
Material (Tube/Fin)	Cu/Al	Cu/Al	Cu/Al	Cu/Al
Coil Type	3/8 in. RTPF	3/8 in. RTPF	3/8 in. RTPF	3/8 in. RTPF
Rows/FPI	3/15	4/15	4/15	3/15
Total Face Area (ft^2)	11.1	11.1	11.1	17.5
Condensate Drain Connection Size	3/4 in.	3/4 in.	3/4 in.	3/4 in.
CONDENSER COIL				
Material (Tube/Fin)	Cu/Al	Cu/Al	Cu/Al	Cu/Al
Coil Type	5/16 in. RTPF	5/16 in. RTPF	5/16 in. RTPF	5/16 in. RTPF
Rows/FPI	2/18	2/18	3/18	2/18
Total Face Area (ft^2)	25.1	25.1	25.1	36.1
EVAPORATOR FAN AND MOTOR				
Standard/Medium Static 3 Phase				
Motor Qty / Drive Type	1 / Direct	1 / Direct	1 / Direct	1 / Direct
Max Cont bhp	2.4	2.4	2.4	3.0
Range (rpm)	250-2000	250-2000	250-2000	250-2200
Fan Qty / Type	1 / Vane Axial	1 / Vane Axial	1 / Vane Axial	1 / Vane Axial
Fan Diameter (in.)	22	22	22	22
High Static 3 Phase				
Motor Qty / Drive Type	1 / Direct	1 / Direct	1 / Direct	1 / Direct
Max Cont bhp	3	3	5	5
Range (rpm)	250-2200	250-2200	250-2200	250-2200
Fan Qty / Type	1 / Vane Axial	1 / Vane Axial	1 / Vane Axial	1 / Vane Axial
Fan Diameter (in.)	22	22	22	22
CONDENSER FAN AND MOTOR				
Qty / Motor Drive Type	2 / Direct	2 / Direct	1 / Direct	3 / Direct
Motor hp / rpm	1/4 / 1100	1/4 / 1100	1 / Multiple Speeds	1/4 / 1100
Fan Diameter (in.)	22	22	30	22
FILTERS				
RA Filter Qty / Size (in.)	4 / 20x20x2	4 / 20x20x2	4 / 20x20x2	6 / 18x24x2
OA Inlet Screen Qty / Size (in.)	1 / 20x24x1	1 / 20x24x1	1 / 20x24x1	Vertical: 2 / 24x27x1 Horizontal: 1 / 30x39x1

NOTE(S):
a. Base unit operating weight does not include weight of options.

LEGEND

bhp — Brake Horsepower
FPI — Fins Per Inch
OA — Outdoor Air
RA — Return Air

Options and accessories

ITEM	OPTION[a]	ACCESSORY[b]
ELECTRIC HEAT		
Electric Resistance Heaters		X
Single Point Kits		X
CABINET		
Hinged Access Panels	X	
UV-C Ultraviolet Lamp		X
4 in. Filter Rack (filters not included)		X
Louvered Hail Guard		X
COIL OPTIONS		
Cu/Cu Indoor and/or Outdoor Coils	X	
Pre-Coated Outdoor Coils	X	
Premium, E-Coated Outdoor Coils	X	
CONTROLS		
Thermostats, Temperature Sensors, and Subbases		X
Smoke Detector (supply and/or return air)		X
Horn Strobe Annunciator[c]		X
Time Guard II Compressor Delay Control Circuit		X
Phase Monitor	X	X
ECONOMIZERS AND OUTDOOR AIR DAMPERS		
EconoMi$er® IV for Electro-mechanical Controls — Non-FDD (Standard air leak damper models)[d]		X
EconoMi$er X for Electro-mechanical Controls, complies with FDD (Low and Ultra Low Leak damper models)[d]	X	X
Motorized Two-Position Outdoor-Air Damper		X
Manual Outdoor-Air Damper (25% and 50%)		X
Barometric Relief[e]	X	X
Power Exhaust — Prop Design		X
Condensate Overflow Switch	X	X
ECONOMIZER SENSORS AND IAQ DEVICES		
Single Dry Bulb Temperature Sensors[f]	X	X
Differential Dry Bulb Temperature Sensors[f]		X
Single Enthalpy Sensors[f]	X	X
Differential Enthalpy Sensors[f]		X
CO_2 Sensor (wall, duct, or unit mounted)[f]	X	X

ITEM	OPTION[a]	ACCESSORY[b]
INDOOR MOTOR AND DRIVE		
Multiple Motor and Drive Packages	X	
LOW AMBIENT CONTROLS		
Winter Start Kit[g]		X
Low Ambient Controller to 0°F (–18°C)[g]		X
POWER OPTIONS		
Convenience Outlet (powered)	X	
Convenience Outlet (unpowered)	X	
Convenience Outlet, 20 amp (unpowered)		X
Non-fused Disconnect[h]	X	
ROOF CURBS		
Roof Curb 14 in. (356 mm)		X
Roof Curb 24 in. (610 mm)		X

NOTE(S):
a. Factory-installed option.
b. Field-installed accessory.
c. Requires a field-supplied 24V transformer for each application.
d. FDD (Fault Detection and Diagnostic) capability per California Title 24 section 120.2.
e. Included with economizer.
f. Sensors used to optimize economizer performance.
g. See application data for assistance.
h. Non-fused disconnect switch cannot be used when unit FLA electrical rating exceeds –
   Sizes 090-120: 80 amps, all voltages.
   Size 150: 100 amps, all voltages.

Options and accessories (cont)

Factory-installed options

Economizer (dry-bulb or enthalpy)

Economizers save money. They bring in fresh, outside air for ventilation; and provide cool, outside air to cool your building. This is the preferred method of low-ambient cooling. When coupled to CO_2 sensors, economizers can provide even more savings by coupling the ventilation air to only that amount required.

Economizers are available, installed and tested by the factory, with either enthalpy or dry-bulb temperature inputs. Additional sensors are available as accessories to optimize the economizers. Economizers include a powered exhaust system to help equalize building pressures.

Economizers can be factory-installed or easily field-installed.

Unit mounted CO_2 sensor

The CO_2 sensor works with the economizer to intake only the correct amount of outside air for ventilation. As occupants fill your building, the CO_2 sensor detects their presence through increasing CO_2 levels, and opens the economizer appropriately. When the occupants leave, the CO_2 levels decrease, and the sensor appropriately closes the economizer. This intelligent control of the ventilation air, called demand controlled ventilation (DCV), reduces the overall load on the rooftop, saving money. It is also available as a field-installed accessory.

Smoke detector (supply and/or return air)

Smoke detectors make your application safer and your job easier. Our smoke detectors immediately shut down the rooftop unit when smoke is detected. They are available, installed by the factory, for supply air, return air, or both.

Thru-the-base connections

Thru-the-base connections, available as a factory option, are necessary to ensure proper connection and seal when routing wire and piping through the rooftop's basepan and curb. These couplings eliminate roof penetration and should be considered for gas lines, main power lines, as well as control power.

Hinged access panels

Allows access to unit's major components with specifically designed hinged access panels. Panels are filter, control box access, and indoor fan motor access.

Cu/Cu (indoor) coils

Copper fins and copper tubes are mechanically bonded to copper tubes and copper tube sheets. A polymer strip prevents coil assembly from contacting the sheet metal coil pan to minimize potential for galvanic corrosion between coil and pan.

E-coated (outdoor and indoor) coils

A flexible epoxy polymer coating uniformly applied to all coil surface areas without material bridging between fins. Coating process shall ensure complete coil encapsulation of tubes, fins and headers.

Pre-coated outdoor coils

A durable epoxy-phenolic coating to provide protection in mildly corrosive coastal environments. The coating minimizes galvanic action between dissimilar metals. Coating is applied to the aluminum fin stock prior to the fin stamping process to create an inert barrier between the aluminum fin and copper tube.

Condenser coil hail guard

Sleek, louvered panels protect the condenser coil from hail damage, foreign objects, and incidental contact.

Convenience outlet (powered or un-powered)

Reduce service and/or installation costs by including a convenience outlet in your specification. We will install this service feature at our factory. Provides a convenient, 15 amp, 115v GFCI receptacle with "Wet in Use" cover. The "powered" option allows the installer to power the outlet from the line side of the disconnect or load side as required by code. The "unpowered" option is to be powered from a separate 115/120v power source.

The unpowered convenience outlet is available as a 15 amp factory-installed option or a 20 amp field-installed accessory.

Non-fused disconnect

This OSHA-compliant, factory-installed, safety switch allows a service technician to locally secure power to the rooftop. When selecting a factory-installed non-fused disconnect, note they are sized for the unit as ordered from the factory. The sizing of these do not accommodate field-installed items such as power exhaust devices, etc. If field installing electric heat with factory-installed non-fused disconnect switch, a single point kit may or may not be required.

Condensate overflow switch

This sensor and related controller monitors the condensate level in the drain pan and shuts down compression operation when overflow conditions occur. It includes:

- Indicator light – solid red (more than 10 seconds on water contact – compressors disabled), blinking red (sensor disconnected)
- 10-second delay to break – eliminates nuisance trips from splashing or waves in pan (sensor needs 10 seconds of constant water contact before tripping)
- Disables the compressors operation when condensate plug is detected, but still allows fans to run for economizer.

Options and accessories (cont)

Field-installed accessories

Filter maintenance indicator

When the optional factory-installed filter maintenance indicator is used, a factory-installed differential pressure switch measures pressure drop across the outside air filter and activates a field-supplied dry contact indicator when the pressure differential exceeds the adjustable switch setpoint.

Condenser coil hail guard

Sleek, louvered panels protect the condenser coil from hail damage, foreign objects, and incidental contact. This can be purchased as a factory-installed option or as a field-installed accessory.

Differential enthalpy sensor

The differential enthalpy sensor is comprised of an outdoor and return air enthalpy sensors to provide differential enthalpy control. The sensor allows the unit to determine if outside air is suitable for free cooling.

Wall or duct mounted CO_2 sensor

The IAQ sensor shall be available in duct or wall mount. The sensor provides demand ventilation indoor air quality (IAQ) control.

4 in. filter rack kit

The 4 in. filter rack accessory kit is designed to hold 4 in. MERV-8 or MERV-13 filters. Filters not included in kit.

UV-C ultraviolet lamp kit

High-output, low temperature ultraviolet lamp. Accessory kit includes lamp, interlock switch, mounting brackets, necessary wires, wire ties, screws and labels to field install kit in unit return air plenum. Separate dedicated 115v power source required. See appropriate installation instructions.

Phase monitor protection

The Phase Monitor Control will monitor the sequence of 3 phase electrical system to provide a phase reversal protection; and monitor the 3 phase voltage inputs to provide a phase loss protection for the 3 phase device. It will work on either a Delta or Wye power connection.

Winter start kit

The winter start kit extends the low ambient limit of your rooftop to 25°F (–4°C). The kit bypasses the low pressure switch, preventing nuisance tripping of the low pressure switch. Other low ambient precautions may still be prudent.

Low ambient controller

The low ambient controller is a head pressure controller kit that is designed to maintain the unit's condenser head pressure during periods of low ambient cooling operation. This device should be used as an alternative to economizer free cooling when economizer usage is either not appropriate or desired. The low ambient controller will either cycle the outdoor fan motors or operate them at reduced speed to maintain the unit operation, depending on the model. This controller allows cooling operation down to 0°F (–18°C) ambient conditions.

NOTE: 0°F (–18°C) is standard on size 120 models.

Roof curb (14 in./356 mm or 24 in./610 mm)

Full perimeter roof curb with exhaust capability provides separate air streams for energy recovery from the exhaust air without supply air contamination.

Filter status indicator accessory

Monitors static pressure across supply and exhaust filters and provides indication when filters become clogged.

Power exhaust

Superior internal building pressure control. This field-installed accessory may eliminate the need for costly, external pressure control fans.

Manual OA damper

Manual outdoor air dampers are an economical way to bring in ventilation air. The dampers are available in 25% and 50% versions.

NOTE: See application tip "ROOFTOP-18-01" prior to use of this damper on 090-150 size models.

Motorized Two-Position damper

The two-position, motorized outdoor air damper admits up to 100% outside air. Using reliable, gear-driven technology, the two-position damper opens to allow ventilation air and closes when the rooftop stops, stopping unwanted infiltration.

NOTE: See application tip "ROOFTOP-18-01" prior to use of this damper on 090-150 size models.

Electric heaters

We offer a full-line of field-installed accessory heaters. The heaters are very easy to use, install and are all pre-engineered and certified.

Time Guard II control circuit

This accessory protects your compressor by preventing short-cycling in the event of some other failure, prevents the compressor from restarting for 30 seconds after stopping. Not required with authorized commercial thermostats.

Disconnect switch bracket

Provides a pre-engineered and sized mounting bracket for applications requiring a unit mounted fused and non-fused disconnect of greater than 100 amps. Bracket assures that no damage will occur to coils when mounting with screws and other fasteners (150 size only).

Options and accessories (cont)

Options and Accessory Weights[a]

OPTION / ACCESSORY NAME	RHV UNIT WEIGHT							
	090		102		120		150	
	lb	kg	lb	kg	lb	kg	lb	kg
Power Exhaust — Vertical	75	34	75	34	75	34	85	39
Power Exhaust — Horizontal	30	14	30	14	30	14	75	34
EconoMi$er® (X or IV)	55	25	55	25	55	25	85	39
Two-Position Damper	58	26	58	26	58	26	65	29
Manual Damper	18	8	18	8	18	8	25	11
Hail Guard (louvered)	17	8	17	8	17	8	17	8
Cu/Cu Condenser Coil	85	39	85	39	100	46	150	68
Cu/Cu Evaporator Coil	50	23	100	46	100	46	100	46
Roof Curb (14 in. curb)	143	65	143	65	143	65	180	82
Roof Curb (24 in. curb)	245	112	245	112	245	112	255	116
CO_2 Sensor	2	1	2	1	2	1	2	1
Optional Indoor Motor[b]	30	14	30	14	30	14	0	0
Low Ambient Controller	9	4	9	4	N/A	N/A	9	4
Winter Start Kit	5	2	5	2	5	2	5	2
Return Air Smoke Detector	7	3	7	3	7	3	7	3
Supply Air Smoke Detector	7	3	7	3	7	3	7	3
Fan Filter Switch	2	1	2	1	2	1	2	1
Non-Fused Disconnect	15	7	15	7	15	7	15	7
Powered Convenience Outlet	36	16	36	16	36	16	36	16
Unpowered Convenience Outlet	4	2	4	2	4	2	4	2
Enthalpy Sensor	2	1	2	1	2	1	2	1
Differential Enthalpy Sensor	3	1	3	1	3	1	3	1

NOTE(S):
a. Where multiple variations are available, the heaviest combination is listed.
b. Add the Optional Indoor Motor weight to the weight of the base unit.

RHV090-102 Base Unit Dimensions

NOTES:

1. DIMENSIONS ARE IN INCHES, DIMENSIONS IN [ ] ARE IN MILLIMETERS.
2. CENTER OF GRAVITY
3. DIRECTION OF AIR FLOW
4. ALL VIEW DRAWN USING 3RD ANGLE

UNIT	OUTDOOR COIL TYPE	J	K	H
RHV090	RTPF	49 3/8 [1253]	36 3/8 [925]	15 7/8 [403]
RHV102	RTPF	49 3/8 [1253]	36 3/8 [925]	15 7/8 [403]
RTPF - ROUND TUBE, PLATE FIN (COPPER/ALUM)				

THIS DOCUMENT IS THE PROPERTY OF CARRIER CORPORATION AND IS DELIVERED UPON THE EXPRESS CONDITION THAT THE CONTENTS WILL NOT BE DISCLOSED OR USED WITHOUT CARRIER CORPORATION'S WRITTEN CONSENT.

SUBMISSION OF THESE DRAWINGS OR DOCUMENTS DOES NOT CONSTITUTE PART PERFORMANCE OR ACCEPTANCE OF CONTRACT.

CONNECTION SIZES	
A	1 3/8" [35] DIA FIELD POWER SUPPLY HOLE
B	2 1/2" [64] DIA POWER SUPPLY KNOCKOUT
C	1 3/4" [51] DIA GAUGE ACCESS PLUG
D	7/8" [22] DIA FIELD CONTROL WIRING HOLE
E	3/4"-14 NPT CONDENSATE DRAIN
G	2" [51] DIA POWER SUPPLY KNOCK-OUT

THRU-THE-BASE CHART (FIELD INST)

THESE HOLES REQUIRED FOR USE WITH ACCY KITS: CRBTMPWR002A01

	THREADED CONDUIT SIZE	WIRE USE	REQ'D HOLE SIZES (MAX.)
W	1/2"	ACC.	7/8" [22.2]
X	1/2"	24V	7/8" [22.2]
Y	1 1/4" (002)	POWER	1 3/4" [44.4]

THRU-THE-BASE CHART (FIOP)

FOR "THRU-THE-BASEPAN" FACTORY OPTION, FITTINGS FOR ONLY X & Y ARE PROVIDED: (1) 1/2" & (1) 1 1/4" ELECTRICAL FITTINGS.

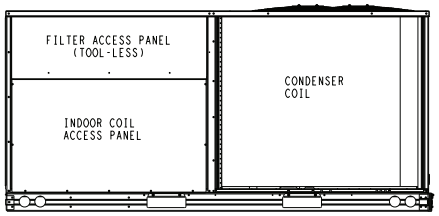

BACK

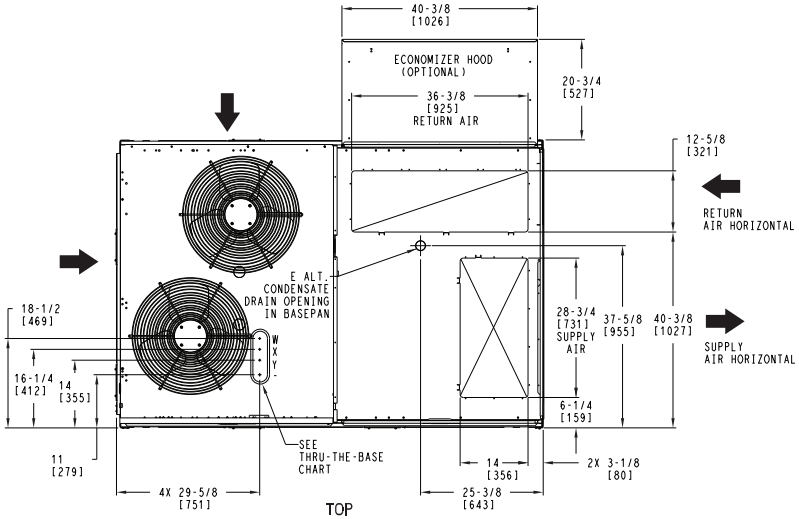

TOP

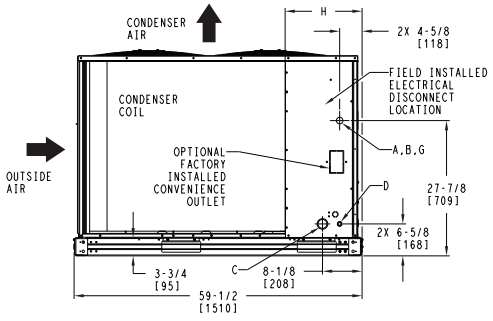

LEFT

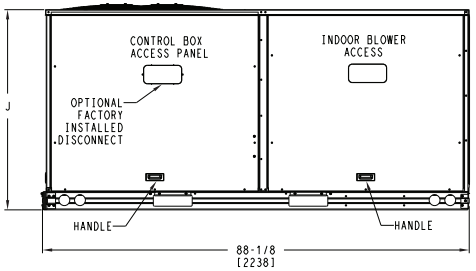

FRONT

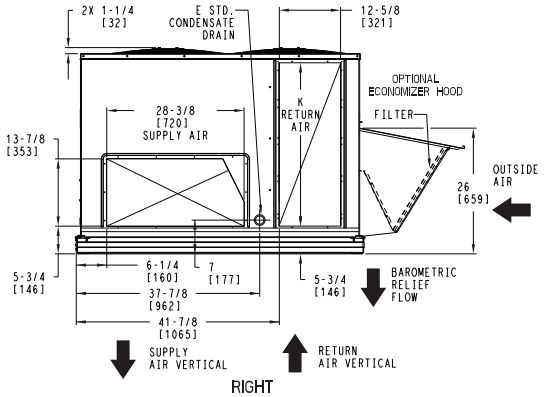

RIGHT

RHV090-102 Base Unit Dimensions (cont)

THIS DOCUMENT IS THE PROPERTY OF CARRIER CORPORATION AND IS DELIVERED UPON THE EXPRESS CONDITION THAT THE CONTENTS WILL NOT BE DISCLOSED OR USED WITHOUT CARRIER CORPORATION'S WRITTEN CONSENT.

SUBMISSION OF THESE DRAWINGS OR DOCUMENTS DOES NOT CONSTITUTE PART PERFORMANCE OR ACCEPTANCE OF CONTRACT.

UNIT	OUTDOOR COIL TYPE	STD. UNIT WEIGHT ***		CORNER WEIGHT (A)		CORNER WEIGHT (B)		CORNER WEIGHT (C)		CORNER WEIGHT (D)		C.G.		
		LBS.	KG.	LBS.	KG.	LBS.	KG.	LBS.	KG.	LBS.	KG.	X	Y	Z
RHV090	RTPF	805	365	163	74	209	95	243	110	190	86	49 1/2 [1257]	32 [813]	19 1/8 [486]
RHV102	RTPF	812	368	164	75	211	96	245	111	191	87	49 1/2 [1257]	32 [813]	19 1/8 [486]
RTPF - ROUND TUBE, PLATE FIN (COPPER/ALUM)														

*** STANDARD UNIT WEIGHT IS WITHOUT ELECTRIC HEAT AND WITHOUT PACKAGING.
FOR OTHER OPTIONS AND ACCESSORIES, REFER TO THE PRODUCT DATA CATALOG.

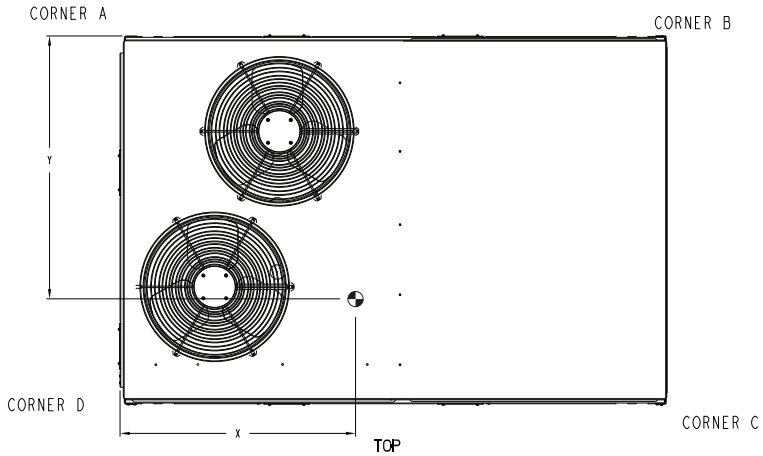

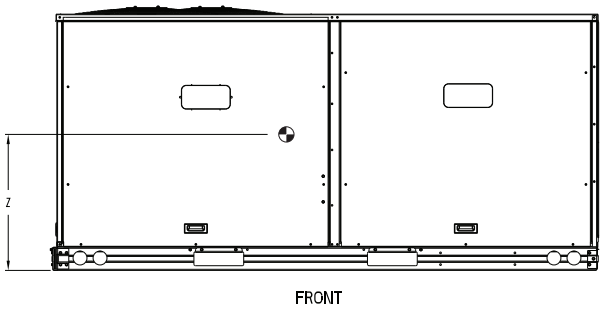

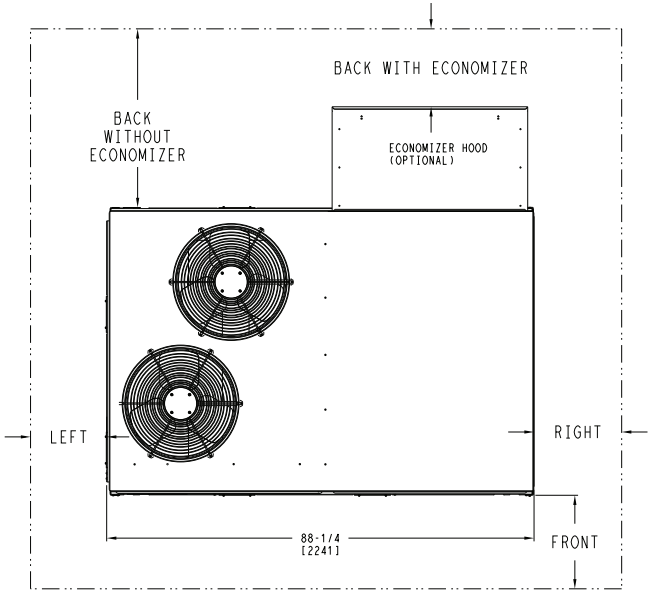

NOTE:

1. FOR ALL MINIMUM CLEARANCES LOCAL CODES OR JURISDICTIONS MAY PREVAIL.

CLEARANCE		
	SERVICE WITH:	SERVICE WITH:
SURFACE	CONDUCTIVE BARRIER	NONCONDUCTIVE BARRIER
FRONT	48 [1219mm]	36 [914mm]
LEFT	48 [1219mm]	42 [1067mm]
BACK W/O ECON	48 [1219mm]	42 [1067mm]
BACK W/ECON	36 [914mm]	36 [914mm]
RIGHT	36 [914mm]	36 [914mm]
TOP	72 [1829mm]	72 [1829mm]

RHV090-102 Base Unit Dimensions (cont)

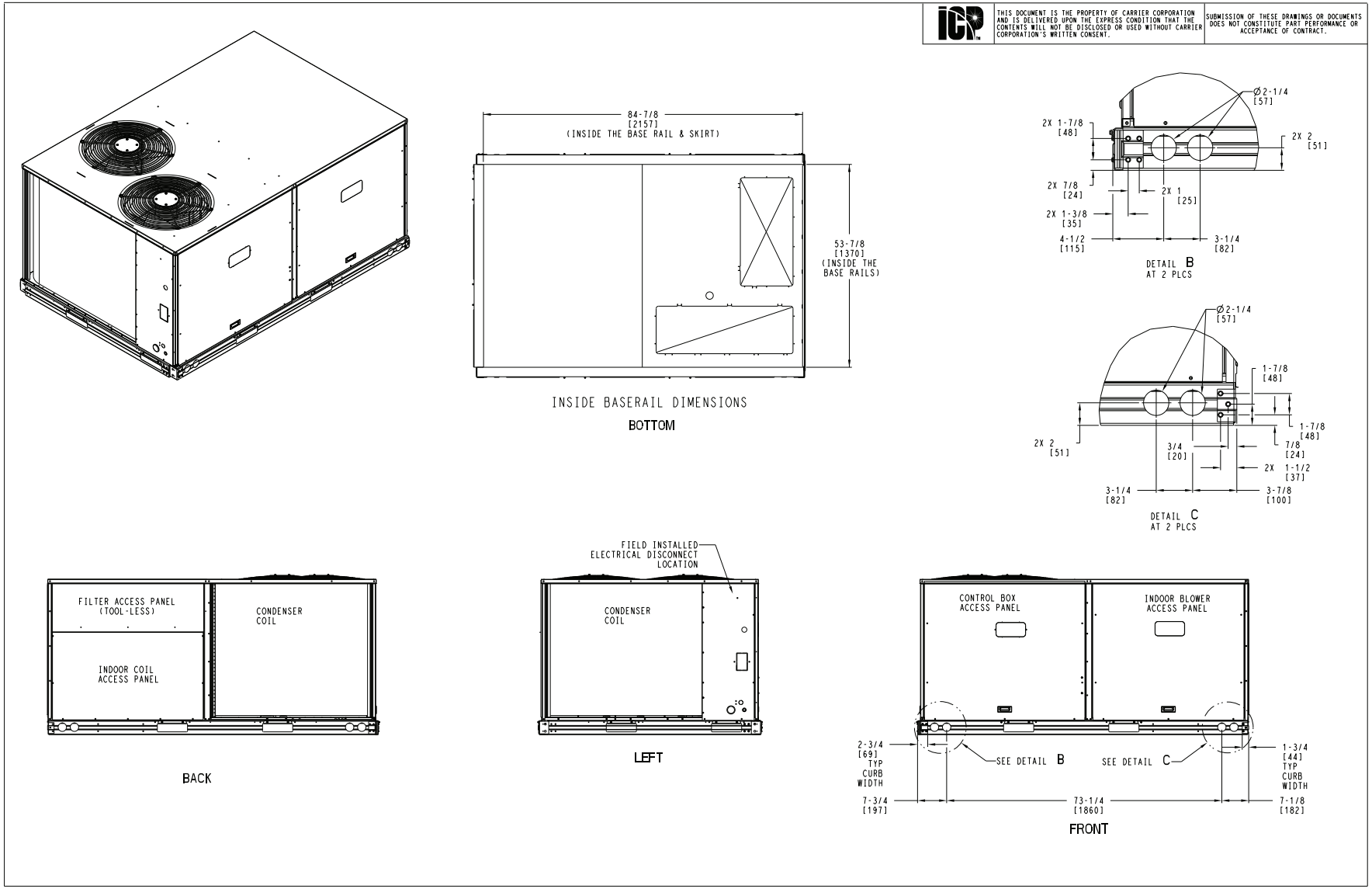

Base unit dimensions (cont)

RHV120 Base Unit Dimensions

NOTES:

1. DIMENSIONS ARE IN INCHES, DIMENSIONS IN [ ] ARE IN MILLIMETERS.
2. CENTER OF GRAVITY
3. DIRECTION OF AIR FLOW
4. ALL VIEW DRAWN USING 3RD ANGLE

UNIT	OUTDOOR COIL TYPE	H
RHV120	RTPF	15 7/8 [403]
RTPF - ROUND TUBE, PLATE FIN (COPPER/ALUM)		

THIS DOCUMENT IS THE PROPERTY OF CARRIER CORPORATION AND IS DELIVERED UPON THE EXPRESS CONDITION THAT THE CONTENTS WILL NOT BE DISCLOSED OR USED WITHOUT CARRIER CORPORATION'S WRITTEN CONSENT.

SUBMISSION OF THESE DRAWINGS OR DOCUMENTS DOES NOT CONSTITUTE PART PERFORMANCE OR ACCEPTANCE OF CONTRACT.

	CONNECTION SIZES
A	1 3/8" [35] DIA FIELD POWER SUPPLY HOLE
B	2 1/2" [64] DIA POWER SUPPLY KNOCKOUT
C	1 3/4" [51] DIA GAUGE ACCESS PLUG
D	7/8" [22] DIA FIELD CONTROL WIRING HOLE
E	3/4"-14 NPT CONDENSATE DRAIN
G	2" [51] DIA POWER SUPPLY KNOCK-OUT

THRU-THE-BASE CHART THESE HOLES REQUIRED FOR USE CRBTMPWR002A01			
	THREADED CONDUIT SIZE	WIRE USE	REQ'D HOLE SIZES (MAX.)
W	1/2"	ACC.	7/8" [22.2]
X	1/2"	24V	7/8" [22.2]
Y	1 1/4" (002)	POWER	1 3/4" [44.4]
	FOR "THRU-THE-BASEPAN" FACTORY OPTION, FITTINGS FOR ONLY X & Y ARE PROVIDED		

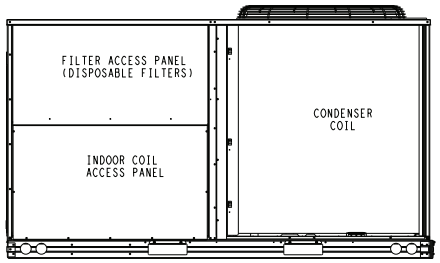

BACK

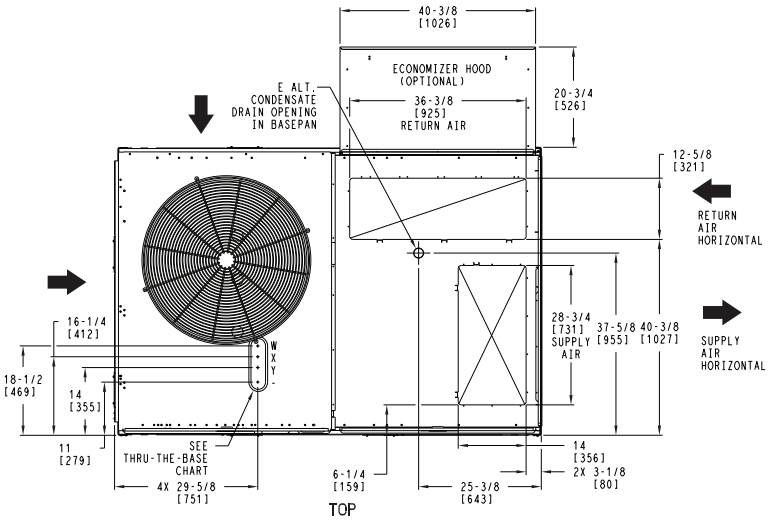

TOP

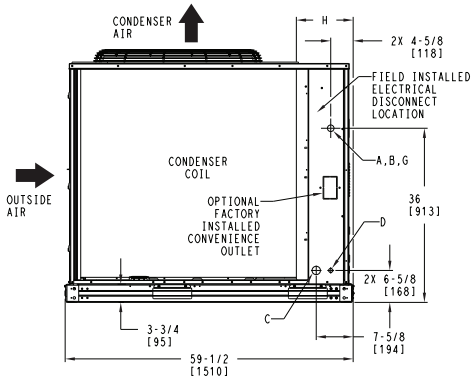

LEFT

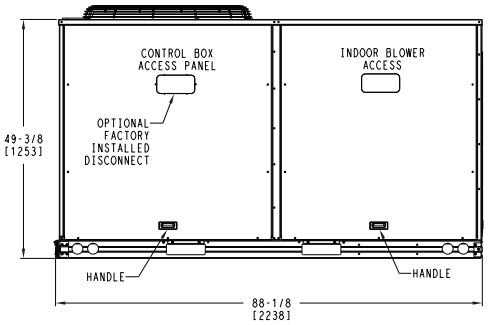

FRONT

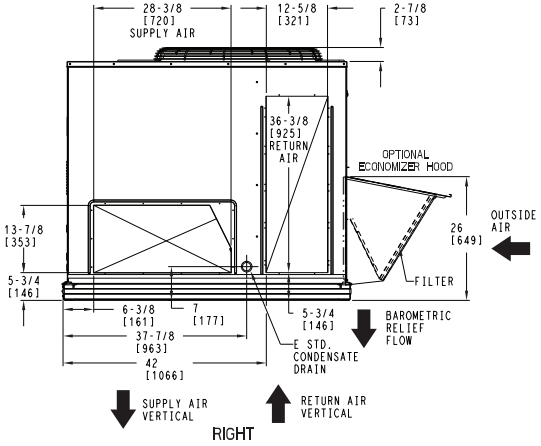

RIGHT

Base unit dimensions (cont)

RHV120 Base Unit Dimensions (cont)

THIS DOCUMENT IS THE PROPERTY OF CARRIER CORPORATION AND IS DELIVERED UPON THE EXPRESS CONDITION THAT THE CONTENTS WILL NOT BE DISCLOSED OR USED WITHOUT CARRIER CORPORATION'S WRITTEN CONSENT.

SUBMISSION OF THESE DRAWINGS OR DOCUMENTS DOES NOT CONSTITUTE PART PERFORMANCE OR ACCEPTANCE OF CONTRACT.

UNIT	OUTDOOR COIL TYPE	STD. UNIT WEIGHT***		CORNER WEIGHT (A)		CORNER WEIGHT (B)		CORNER WEIGHT (C)		CORNER WEIGHT (D)		C.G.		
		LBS.	KG.	LBS.	KG.	LBS.	KG.	LBS.	KG.	LBS.	KG.	X	Y	Z
RHV120	RTPF	955	433	190	86	243	110	293	133	229	104	49 1/2 [1257]	32 1/2 [826]	19 1/8 [486]
RTPF - ROUND TUBE, PLATE FIN (COPPER/ALUM)														

*** STANDARD UNIT WEIGHT IS WITHOUT ELECTRIC HEAT AND WITHOUT PACKAGING.
FOR OTHER OPTIONS AND ACCESSORIES, REFER TO THE PRODUCT DATA CATALOG.

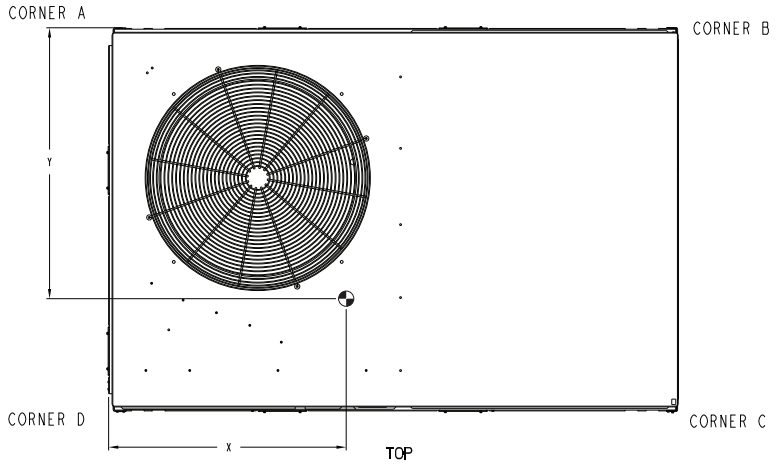

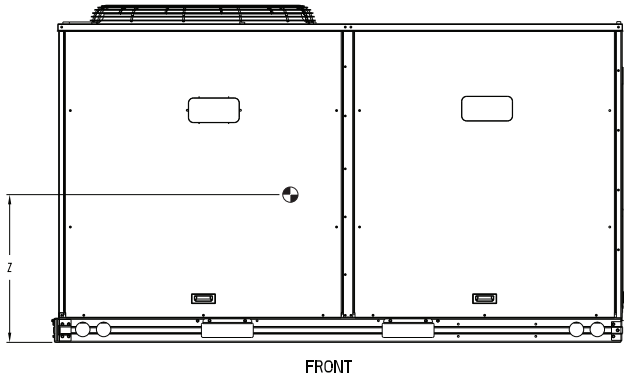

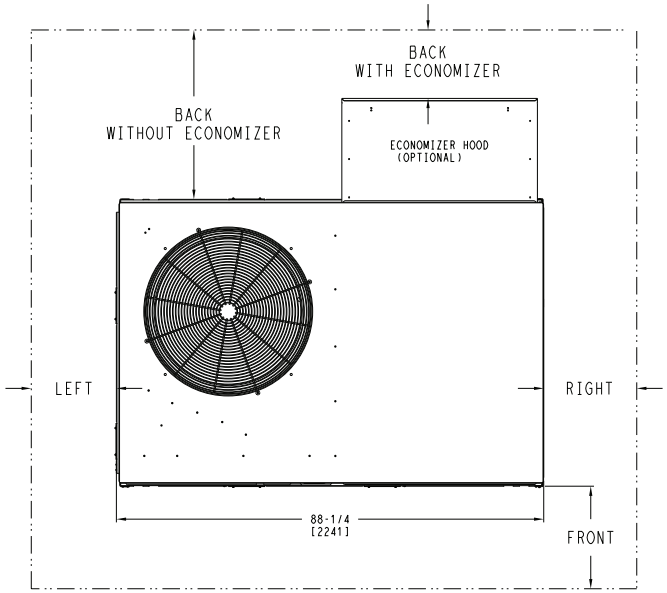

NOTE:

1. FOR ALL MINIMUM CLEARANCES LOCAL CODES OR JURISDICTIONS MAY PREVAIL.

CLEARANCE		
	SERVICE WITH:	SERVICE WITH:
SURFACE	CONDUCTIVE BARRIER	NONCONDUCTIVE BARRIER
FRONT	48 [1219mm]	36 [914mm]
LEFT	48 [1219mm]	42 [1067mm]
BACK W/O ECON	48 [1219mm]	42 [1067mm]
BACK W/ECON	36 [914mm]	36 [914mm]
RIGHT	36 [914mm]	36 [914mm]
TOP	72 [1829mm]	72 [1829mm]

RHV120 Base Unit Dimensions (cont)

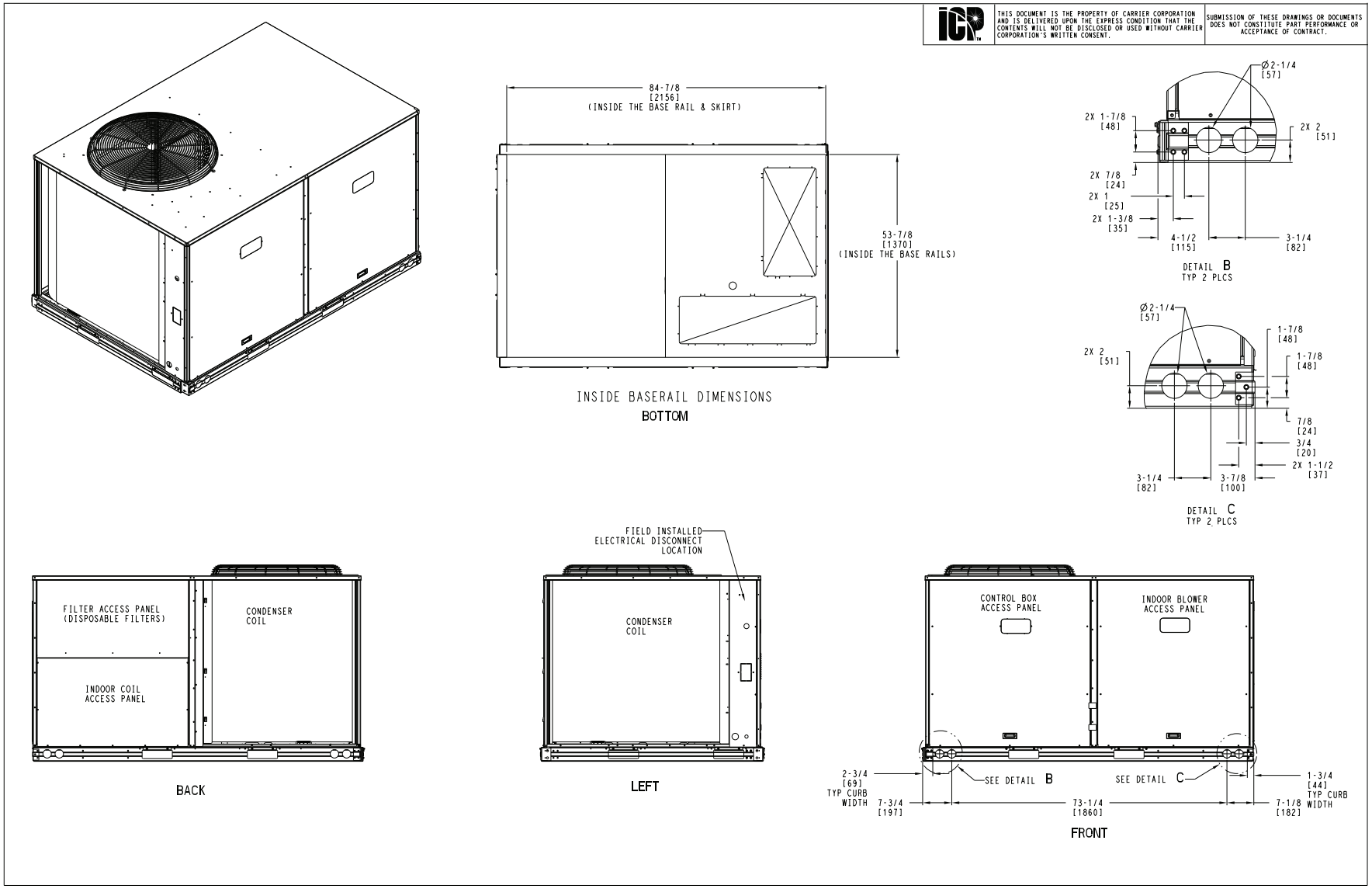

RHV150 Base Unit Dimensions

NOTES:

1. DIMENSIONS ARE IN INCHES. DIMENSIONS IN [ ] ARE IN MILLIMETERS.
2. CENTER OF GRAVITY
3. DIRECTION OF AIR FLOW

THIS DOCUMENT IS THE PROPERTY OF CARRIER CORPORATION AND IS DELIVERED UPON THE EXPRESS CONDITION THAT THE CONTENTS WILL NOT BE DISCLOSED OR USED WITHOUT WRITTEN CONSENT.

SUBMISSION OF THESE DRAWINGS OR DOCUMENTS DOES NOT CONSTITUTE PART PERFORMANCE OR ACCEPTANCE OF CONTRACT.

	CONNECTION SIZES
B	2 1/2" [64] DIA POWER SUPPLY HOLE
D	7/8" [22] DIA FIELD CONTROL WIRING HOLE
E	3/4"-14 NPT CONDENSATE DRAIN
F	7/8" [22] DIA FIELD CONVENIENCE OUTLET HOLE

THRU-THE-BASE CHART
THESE HOLES REQUIRED FOR USE
CRBTMPWR005A00,006A00,007A00

ACCESSORY NO.		THREADED CONDUIT SIZE	WIRE USE	REQ'D HOLE SIZES (MAX.)
005	W	1/2"	ACC.	7/8" [22.2]
	X	1/2"	24V	7/8" [22.2]
	Y	1 1/4"	POWER	1 1/2" [38.1]
006	W	1/2"	ACC.	7/8" [22.2]
	X	1/2"	24V	7/8" [22.2]
	Y	1 1/2"	POWER	2" [50.8]
007	W	1/2"	ACC.	7/8" [22.2]
	X	1/2"	24V	7/8" [22.2]
	Y	2"	POWER	2 1/2" [63.5]
	FOR "THRU-THE-BASEPAN" FACTORY OPTION, FITTINGS FOR X & Y ARE PROVIDED AS SPECIFIED ON "006".			

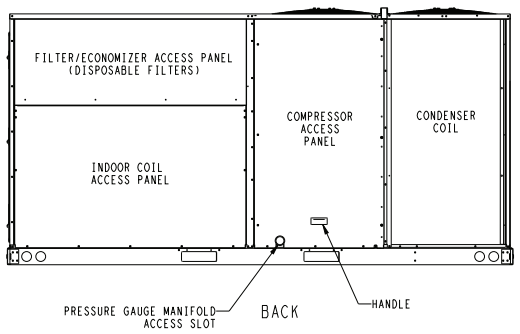

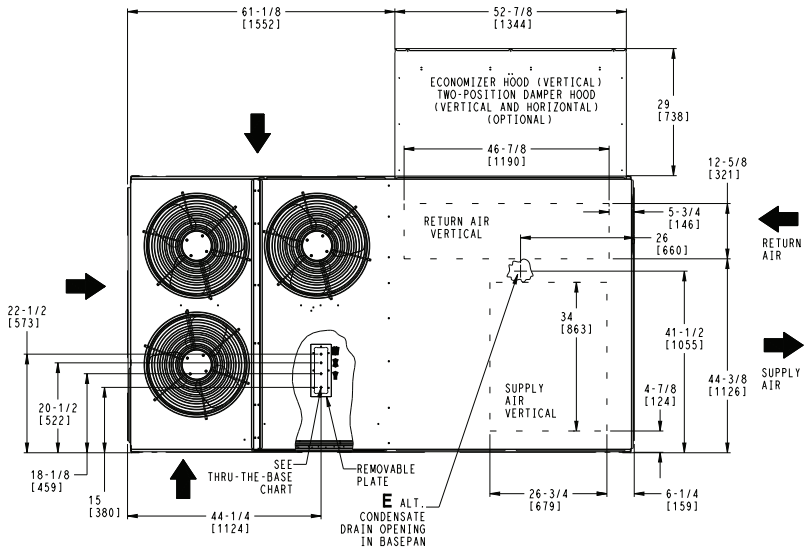

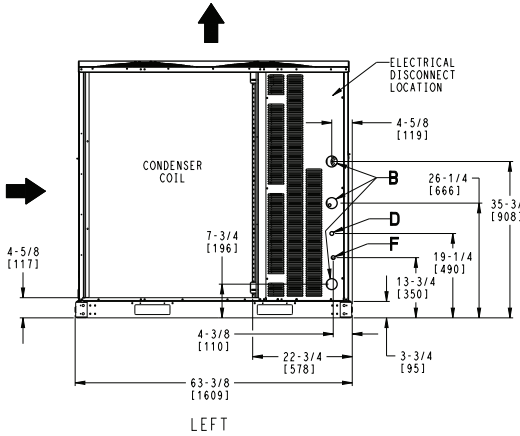

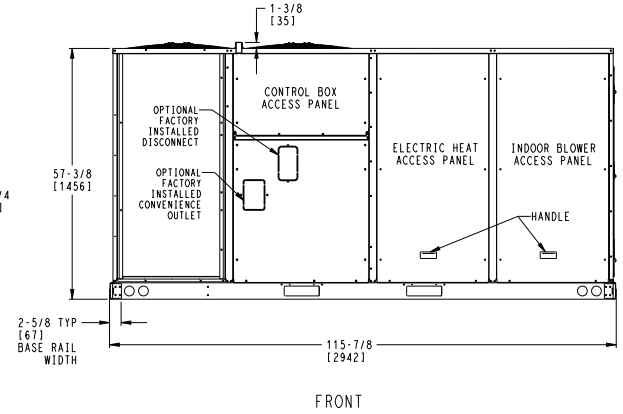

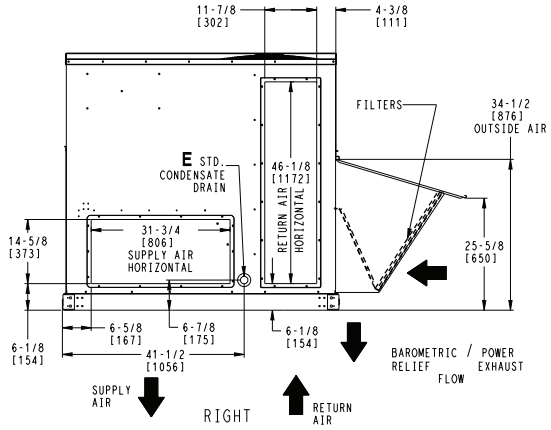

ITC CLASSIFICATION	SHEET	DATE	SUPERCEDES			REV
U.S. ECCN:NSR	1 OF 2	5/4/22	-	RHV 150 SINGLE ZONE ELECTRICAL HEAT PUMP	50TM002594	-

RHV150 Base Unit Dimensions (cont)

UNIT	STD UNIT WEIGHT		CORNER WEIGHT (A)		CORNER WEIGHT (B)		CORNER WEIGHT (C)		CORNER WEIGHT (D)		C.G.		
	LBS.	KG.	LBS.	KG.	LBS.	KG.	LBS.	KG.	LBS.	KG.	X	Y	Z
RHV-150	1250	567	350	159	338	153	277	125	286	130	57 [1448]	28 1/2 [724]	24 [610]

STANDARD UNIT WEIGHT IS WITHOUT ELECTRIC HEAT & WITHOUT PACKAGING.
FOR OPTIONS & ACCESSORIES, REFER TO THE PRODUCT DATA CATALOG.

THIS DOCUMENT IS THE PROPERTY OF CARRIER CORPORATION AND IS DELIVERED UPON THE EXPRESS CONDITION THAT THE CONTENTS WILL NOT BE DISCLOSED OR USED WITHOUT WRITTEN CONSENT.

SUBMISSION OF THESE DRAWINGS OR DOCUMENTS DOES NOT CONSTITUTE PART PERFORMANCE OR ACCEPTANCE OF CONTRACT.

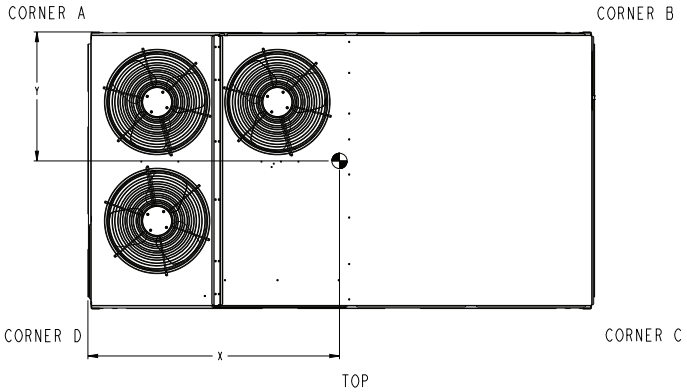

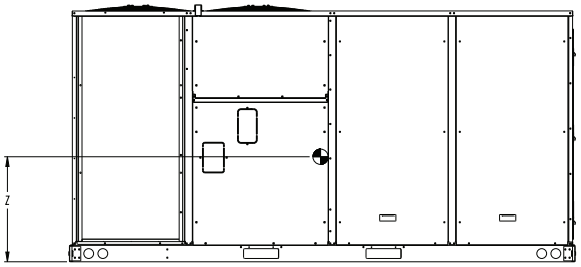

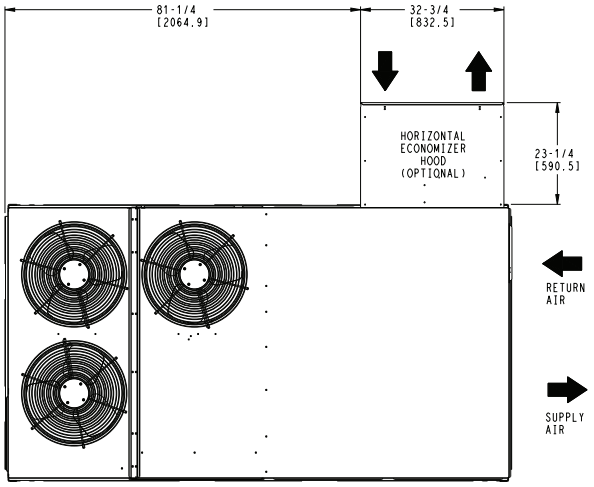

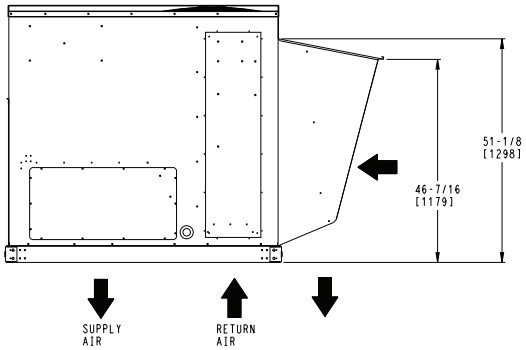

HORIZONTAL ECONOMIZER

ITC CLASSIFICATION	SHEET	DATE	SUPERCEDES			REV
U.S. ECCN:NSR	2 OF 2	5/4/22	-	RHV 150 SINGLE ZONE ELECTRICAL HEAT PUMP	50TM002594	-

Base unit dimensions (cont)

RHV150 Base Unit Dimensions — Clearances

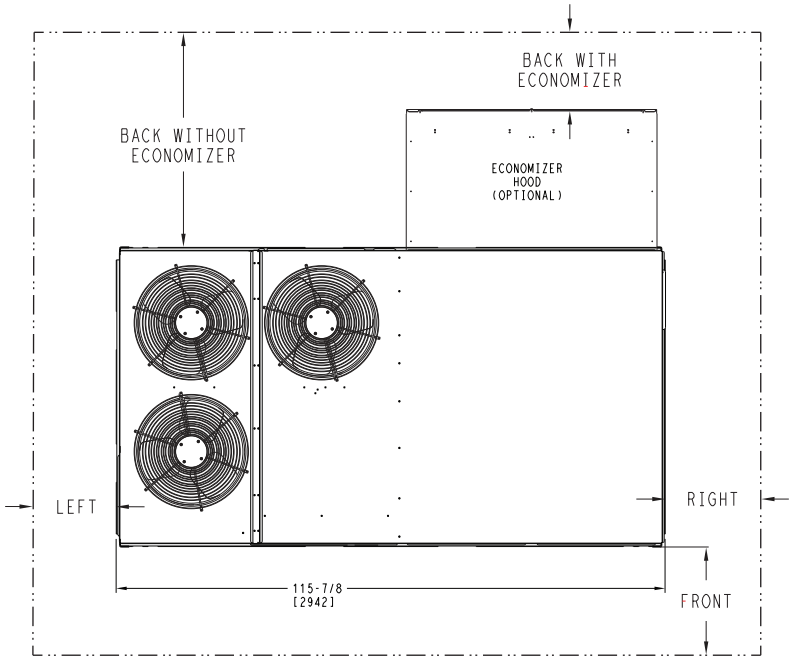

CLEARANCE[a, b]			
SURFACE	**Service with Conductive Barrier**	**Service with Non-conductive Barrier**	**Operating Clearance**
FRONT	48 in. (1219 mm)	36 in. (914 mm)	18 in. (457 mm)
LEFT	48 in. (1219 mm)	42 in. (1067 mm)	18 in. (457 mm)
BACK W/O ECONOMIZER	48 in. (1219 mm)	42 in. (1067 mm)	18 in. (457 mm)
BACK W/ ECONOMIZER	36 in. (914 mm)	36 in. (914 mm)	18 in. (457 mm)
RIGHT	36 in. (914 mm)	36 in. (914 mm)	18 in. (457 mm)
LEFT	72 in. (1829 mm)	72 in. (1829 mm)	72 in. (1829 mm)

NOTE(S):
a. For all minimum clearances local codes or jurisdictions may prevail.
b. See page 12 for RHV090-102 clearances. See page 15 for RHV120 clearances.

Roof Curb Dimensions — RHV090-120

ROOF CURB ACCESSORY #	A
CRRFCURB003A01	14" [356]
CRRFCURB004A01	24" [610]

NOTES:
1. ROOFCURB ACCESSORY IS SHIPPED DISASSEMBLED.
2. INSULATED PANELS: 25.4 [1"] THK. POLYURETHANE FOAM, 44.5 [1-3/4] # DENSITY.
3. DIMENSIONS IN [ ] ARE IN MILLIMETERS.
4. ROOFCURB: 18 GAGE STEEL.
5. ATTACH DUCTWORK TO CURB. (FLANGES OF DUCT REST ON CURB).
6. SERVICE CLEARANCE 4 FEET ON EACH SIDE.
7. ▨ DIRECTION OF AIR FLOW.
8. CONNECTOR PACKAGE CRBTMPWR002A01 IS FOR THRU-THE-CURB GAS TYPE PACKAGE CRBTMPWR004A01 IS FOR THRU-THE-BOTTOM TYPE GAS CONNECTIONS.

CONNECTOR PKG. ACC.	GAS CONNECTION TYPE	GAS FITTING	POWER WIRING FITTING	CONTROL WIRING FITTING	ACCESSORY CONVENIENCE OUTLET WIRING CONNECTOR
CRBTMPWR002A01	THRU THE CURB	3/4" [19] NPT	1 1/4" [31.7] NPT	1/2" [12.7] NPT	1/2" [12.7] NPT
CRBTMPWR004A01	THRU THE BOTTOM				

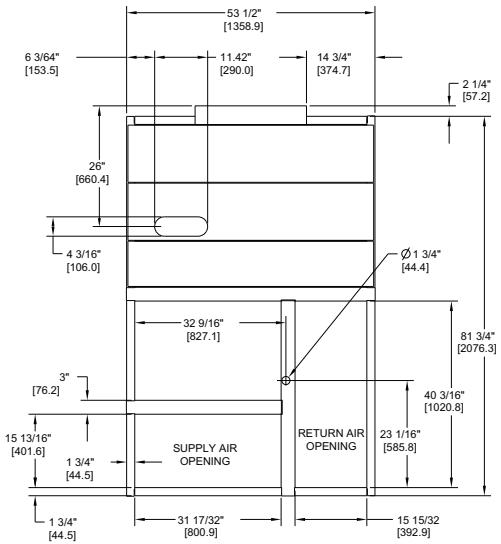

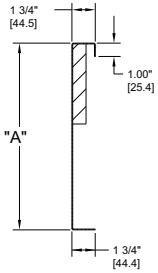

SECTION THRU SIDE

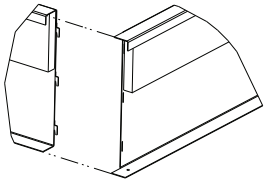

VIEW "B"
CORNER DETAIL

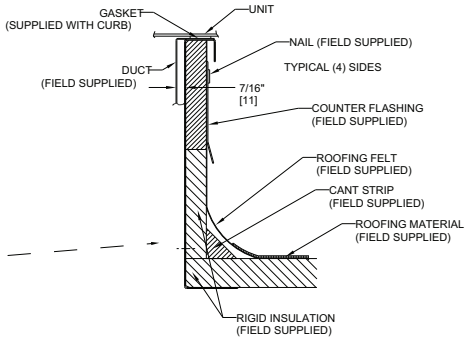

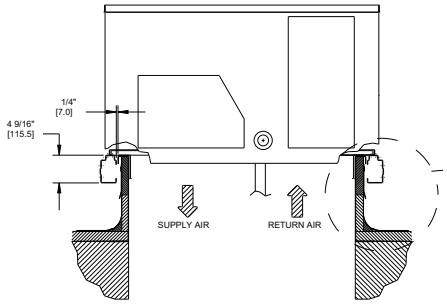

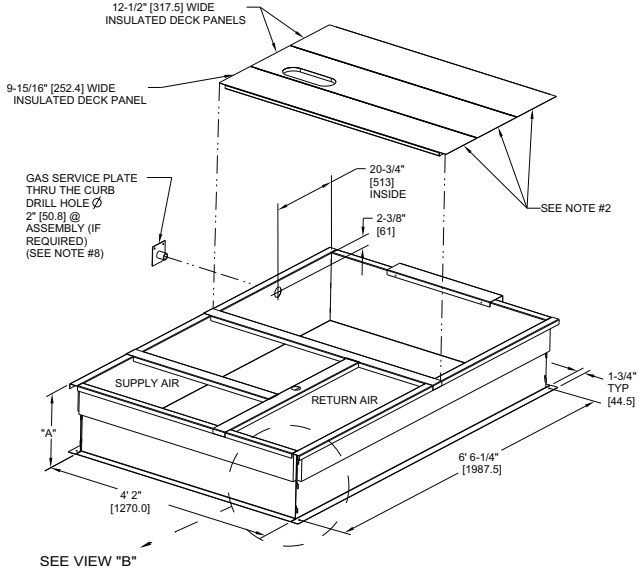

CERTIFIED DRAWING

REV	REVISION RECORD	DATE	BY	CHK'D	APP'D	ECN NO.
C	6' 61/4" WAS 6' 7 1/6", 4'2' WAS 4' 2 13/16"; 18 GA WAS 16 GA.; 15 13/16" WAS 15 15/16"; NAIL FIELD SUPPLIED WAS WITH CURB	4/22/13	MMC	-	-	1067898

DRAWING RELEASE LEVEL: PRODUCTION			
THIRD ANGLE PROJECTION	UNLESS OTHERWISE SPECIFIED DIMENSIONS ARE IN INCHES TOLERANCES ON: 1 DEC ± - 2 DEC ± - 3 DEC ± - ANG ± -		THIS DOCUMENT AND THE INFORMATION CONTAINED THEREIN IS PROPRIETARY TO CARRIER CORPORATION AND SHALL NOT BE USED OR DISCLOSED TO OTHERS, IN WHOLE OR IN PART, WITHOUT THE WRITTEN AUTHORIZATION OF CARRIER CORPORATION.
MATERIAL - - -	AUTHORIZATION NUMBER 1029120		TITLE CURB ASY, ROOF
ENGINEERING REQUIREMENTS T-005, Y-002	ENGINEERING - -	MANUFACTURING - -	SIZE D / DRAWING NUMBER 50HJ405012 SHEET 5 OF 5 / REV C
WEIGHT: -	DRAFTER MMC 12/16/09	CHECKER - -	
SURFACE FINISH - / MFG/PURCH PURCH	MODEL (INTERNAL USE ONLY)		NEXT DRAWING - / SCALE N/A / DISTRIBUTION -

Roof Curb Dimensions — RHV150

ROOF CURB ACCESSORY #	A
CRRFCURB074A00	14" [356]
CRRFCURB075A00	24" [610]

NOTES:
1. ROOFCURB ACCESSORY IS SHIPPED DISASSEMBLED.
2. INSULATED PANELS: 1/2" THK. NEOPRENE FOAM, 1.0# DENSITY.
3. DIMENSIONS IN [ ] ARE IN MILLIMETERS.
4. ROOFCURB SIDEWALLS: 16 GAGE STEEL.
5. ATTACH DUCTWORK TO CURB. (FLANGES OF DUCT REST ON CURB).
6. SERVICE CLEARANCE 4 FT ON EACH SIDE.
7. ▬▶ DIRECTION OF AIR FLOW.
8. "L" & "S" DESIGNATIONS DENOTE LOCATION OF COMMON CROSS RAIL. (POSITION "L" FOR LARGE DUCT OPENING CURB).

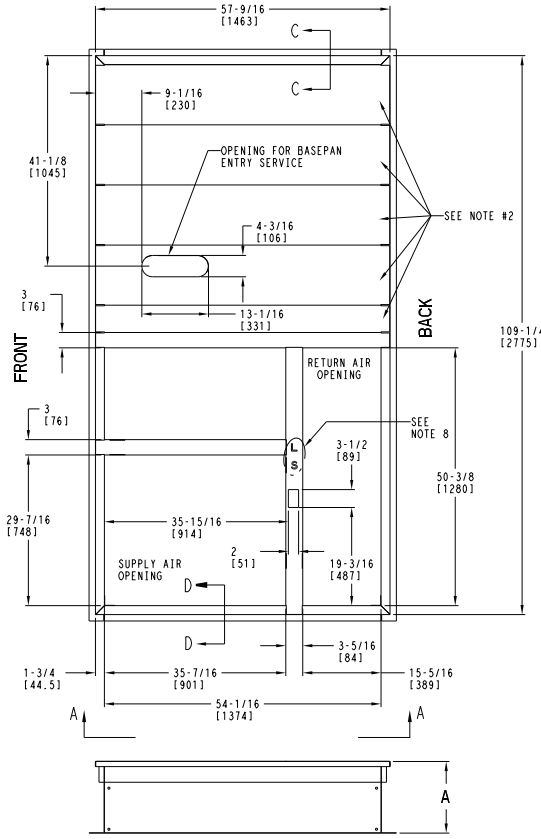

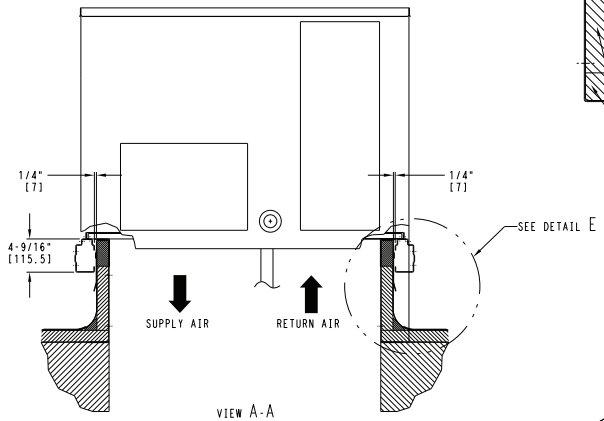

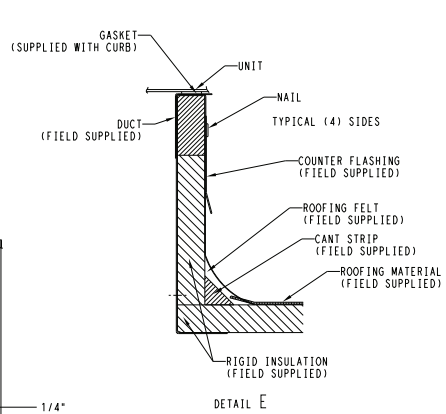

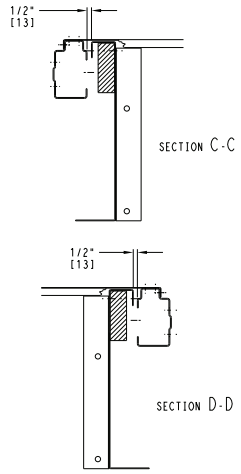

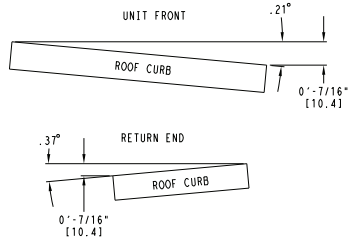

MAX CURB LEVELING TOLERANCES

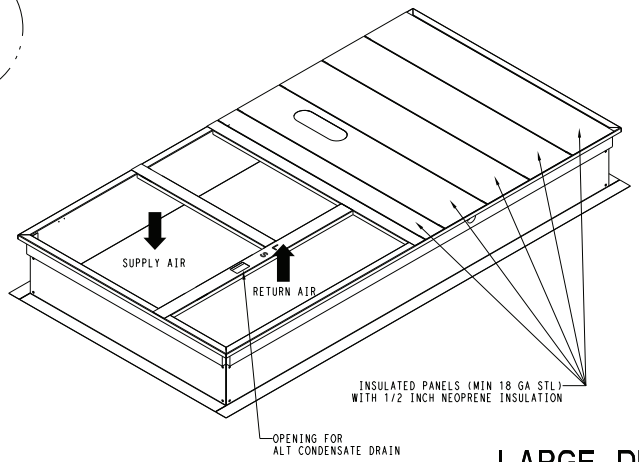

LARGE DUCT OPENINGS

50TM500780	REV B

Performance data

RHV090 Two Stage Cooling Capacities

RHV090				AMBIENT TEMPERATURE (°F)														
				85			95			105			115			125		
				EAT (db)			EAT (db)			EAT (db)			EAT (db)			EAT (db)		
				75	80	85	75	80	85	75	80	85	75	80	85	75	80	85
2250 cfm	EAT (wb)	58	TC	76.1	76.1	86.7	71.2	71.2	81.4	66.0	66.0	75.8	60.7	60.7	70.0	55.1	55.1	63.9
			SHC	65.4	76.1	86.7	60.9	71.2	81.4	56.2	66.0	75.8	51.3	60.7	70.0	46.2	55.1	63.9
		62	TC	80.9	80.9	82.4	75.0	75.0	78.6	68.8	68.8	74.6	62.4	62.4	70.5	55.8	55.8	66.1
			SHC	58.9	70.6	82.4	55.1	66.8	78.6	51.2	62.9	74.6	47.2	58.8	70.5	43.0	54.5	66.1
		67	TC	90.6	90.6	90.6	84.3	84.3	84.3	77.6	77.6	77.6	70.8	70.8	70.8	63.6	63.6	63.6
			SHC	48.2	60.0	71.9	44.5	56.3	68.1	40.6	52.4	64.2	36.6	48.4	60.2	32.6	44.4	56.2
		72	TC	101.1	101.1	101.1	94.4	94.4	94.4	87.3	87.3	87.3	80.0	80.0	80.0	72.4	72.4	72.4
			SHC	37.3	49.2	61.1	33.5	45.4	57.4	29.7	41.6	53.5	25.8	37.7	49.5	21.8	33.6	45.5
		76	TC	—	110.1	110.1	—	103.0	103.0	—	95.6	95.6	—	87.9	87.9	—	79.8	79.8
			SHC	—	40.4	52.8	—	36.7	49.0	—	32.8	45.1	—	28.9	41.1	—	24.9	37.0
2650 cfm	EAT (wb)	58	TC	81.6	81.6	92.8	76.4	76.4	87.2	70.9	70.9	81.3	65.2	65.2	75.1	59.3	59.3	68.6
			SHC	70.3	81.6	92.8	65.5	76.4	87.2	60.6	70.9	81.3	55.4	65.2	75.1	50.0	59.3	68.6
		62	TC	84.3	84.3	91.9	78.2	78.2	87.9	71.8	71.8	83.5	66.4	66.4	75.4	59.4	59.4	71.8
			SHC	64.7	78.3	91.9	60.8	74.3	87.9	56.6	70.1	83.5	50.8	63.1	75.4	46.9	59.4	71.8
		67	TC	94.0	94.0	94.0	87.4	87.4	87.4	80.4	80.4	80.4	73.2	73.2	73.2	65.8	65.8	65.8
			SHC	52.1	65.9	79.7	48.3	62.0	75.8	44.3	58.1	71.8	40.3	54.1	67.8	36.2	50.0	63.7
		72	TC	104.7	104.7	104.7	97.7	97.7	97.7	90.3	90.3	90.3	82.6	82.6	82.6	74.7	74.7	74.7
			SHC	39.2	53.0	66.9	35.3	49.2	63.1	31.4	45.2	59.1	27.4	41.2	55.0	23.3	37.1	50.9
		76	TC	—	113.8	113.8	—	106.3	106.3	—	98.6	98.6	—	90.6	90.6	—	82.2	82.2
			SHC	—	42.6	56.9	—	38.8	53.0	—	34.8	49.0	—	30.8	44.9	—	26.7	40.8
3000 cfm	EAT (wb)	58	TC	85.6	85.6	97.4	80.2	80.2	91.4	74.5	74.5	85.2	68.5	68.5	78.7	62.3	62.3	72.0
			SHC	73.9	85.6	97.4	68.9	80.2	91.4	63.7	74.5	85.2	58.3	68.5	78.7	52.7	62.3	72.0
		62	TC	86.8	86.8	99.5	80.5	80.5	95.4	74.6	74.6	88.9	68.6	68.6	82.3	62.4	62.4	75.3
			SHC	69.3	84.4	99.5	65.3	80.3	95.4	60.2	74.6	88.9	55.0	68.6	82.3	49.5	62.4	75.3
		67	TC	96.3	96.3	96.3	89.5	89.5	89.5	82.3	82.3	82.3	74.9	74.9	74.9	67.2	67.2	69.9
			SHC	55.3	70.7	86.2	51.4	66.9	82.3	47.4	62.8	78.3	43.4	58.7	74.1	39.2	54.5	69.9
		72	TC	107.1	107.1	107.1	99.8	99.8	99.8	92.3	92.3	92.3	84.4	84.4	84.4	76.2	76.2	76.2
			SHC	40.6	56.1	71.7	36.7	52.2	67.7	32.7	48.2	63.7	28.7	44.2	59.6	24.6	40.0	55.4
		76	TC	—	116.3	116.3	—	108.6	108.6	—	100.6	100.6	—	92.4	92.4	—	—	—
			SHC	—	44.3	60.2	—	40.4	56.2	—	36.4	52.2	—	32.4	48.1	—	—	—
3400 cfm	EAT (wb)	58	TC	89.6	89.6	101.8	83.9	83.9	95.6	77.9	77.9	89.1	71.7	71.7	82.3	65.3	65.3	75.2
			SHC	77.5	89.6	101.8	72.2	83.9	95.6	66.8	77.9	89.1	61.2	71.7	82.3	55.3	65.3	75.2
		62	TC	90.8	90.8	102.4	85.0	85.0	96.1	78.0	78.0	92.9	71.8	71.8	86.0	65.3	65.3	78.7
			SHC	71.8	87.1	102.4	66.8	81.5	96.1	63.2	78.0	92.9	57.7	71.8	86.0	52.0	65.3	78.7
		67	TC	98.4	98.4	98.4	91.4	91.4	91.4	84.0	84.0	85.3	76.4	76.4	81.0	68.6	68.6	76.6
			SHC	58.7	76.0	93.3	54.8	72.1	89.3	50.8	68.0	85.3	46.6	63.8	81.0	42.4	59.5	76.6
		72	TC	109.3	109.3	109.3	101.8	101.8	101.8	94.0	94.0	94.0	86.0	86.0	86.0	77.6	77.6	77.6
			SHC	42.0	59.4	76.8	38.1	55.5	72.8	34.1	51.4	68.8	30.0	47.3	64.6	25.8	43.1	60.4
		76	TC	—	118.5	118.5	—	110.7	110.7	—	102.5	102.5	—	—	—	—	—	—
			SHC	—	46.0	63.7	—	42.0	59.7	—	38.0	55.7	—	—	—	—	—	—
3750 cfm	EAT (wb)	58	TC	92.6	92.6	105.1	86.7	86.7	98.7	80.6	80.6	92.0	74.1	74.1	85.0	67.4	67.4	77.7
			SHC	80.1	92.6	105.1	74.7	86.7	98.7	69.1	80.6	92.0	63.3	74.1	85.0	57.2	67.4	77.7
		62	TC	92.7	92.7	109.4	86.8	86.8	102.8	80.6	80.6	95.9	74.2	74.2	88.7	67.5	67.5	81.2
			SHC	76.0	92.7	109.4	70.8	86.8	102.8	65.4	80.6	95.9	59.7	74.2	88.7	53.9	67.5	81.2
		67	TC	99.9	99.9	99.9	92.7	92.7	95.3	85.3	85.3	91.1	77.6	77.6	86.8	69.6	69.6	82.2
			SHC	61.6	80.5	99.4	57.6	76.5	95.3	53.5	72.3	91.1	49.4	68.1	86.8	45.0	63.6	82.2
		72	TC	110.8	110.8	110.8	103.2	103.2	103.2	95.3	95.3	95.3	87.1	87.1	87.1	78.5	78.5	78.5
			SHC	43.2	62.2	81.1	39.2	58.2	77.1	35.2	54.1	73.1	31.1	50.0	68.9	26.9	45.7	64.6
		76	TC	—	120.1	120.1	—	112.1	112.1	—	—	—	—	—	—	—	—	—
			SHC	—	47.4	66.7	—	43.4	62.6	—	—	—	—	—	—	—	—	—

LEGEND

— — Do Not Operate
cfm — Cubic Feet Per Minute (Supply Air)
EAT (db) — Entering Air Temperature (dry bulb)
EAT (wb) — Entering Air Temperature (wet bulb)
SHC — Sensible Heat Capacity (1000 Btuh) Gross
TC — Total Capacity (1000 Btuh) Gross

NOTE: See minimum-maximum airflow ratings on page 5.

Performance data (cont)

RHV090 Single Stage Cooling Capacities

RHV090				AMBIENT TEMPERATURE (°F)														
				85			95			105			115			125		
				EAT (db)			EAT (db)			EAT (db)			EAT (db)			EAT (db)		
				75	80	85	75	80	85	75	80	85	75	80	85	75	80	85
1125 cfm	EAT (wb)	58	TC	36.3	36.3	41.9	33.0	33.0	38.4	29.6	29.6	34.8	26.0	26.0	31.0	22.4	22.4	27.0
			SHC	30.7	36.3	41.9	27.6	33.0	38.4	24.4	29.6	34.8	21.1	26.0	31.0	17.7	22.4	27.0
		62	TC	39.4	39.4	39.6	35.5	35.5	36.7	31.5	31.5	33.9	27.2	27.2	31.0	22.9	22.9	28.0
			SHC	27.4	33.5	39.6	24.6	30.7	36.7	21.8	27.8	33.9	18.9	24.9	31.0	15.9	22.0	28.0
		67	TC	45.2	45.2	45.2	41.1	41.1	41.1	36.8	36.8	36.8	32.4	32.4	32.4	27.7	27.7	27.7
			SHC	22.5	28.6	34.7	19.7	25.8	31.9	16.9	23.0	29.0	14.0	20.1	26.1	11.1	17.1	23.2
		72	TC	51.5	51.5	51.5	47.2	47.2	47.2	42.6	42.6	42.6	37.9	37.9	37.9	33.0	33.0	33.0
			SHC	17.5	23.6	29.7	14.7	20.8	26.9	11.9	18.0	24.1	9.0	15.1	21.2	6.1	12.2	18.3
		76	TC	—	56.9	56.9	—	52.4	52.4	—	47.6	47.6	—	42.7	42.7	—	—	—
			SHC	—	19.5	25.7	—	16.8	22.9	—	13.9	20.1	—	11.0	17.2	—	—	—
1325 cfm	EAT (wb)	58	TC	39.7	39.7	45.6	36.2	36.2	41.9	32.6	32.6	38.0	28.8	28.8	34.0	24.9	24.9	29.8
			SHC	33.7	39.7	45.6	30.4	36.2	41.9	27.1	32.6	38.0	23.6	28.8	34.0	20.0	24.9	29.8
		62	TC	41.5	41.5	44.9	37.4	37.4	42.0	33.2	33.2	39.0	28.9	28.9	35.9	25.0	25.0	31.6
			SHC	30.7	37.8	44.9	27.9	35.0	42.0	24.9	32.0	39.0	21.9	28.9	35.9	18.4	25.0	31.6
		67	TC	47.3	47.3	47.3	43.0	43.0	43.0	38.6	38.6	38.6	33.9	33.9	33.9	29.0	29.0	29.0
			SHC	24.8	31.9	39.0	22.0	29.1	36.2	19.1	26.2	33.3	16.1	23.2	30.3	13.1	20.2	27.3
		72	TC	53.7	53.7	53.7	49.2	49.2	49.2	44.5	44.5	44.5	39.5	39.5	39.5	34.5	34.5	34.5
			SHC	18.8	25.9	33.1	15.9	23.1	30.2	13.0	20.2	27.3	10.0	17.2	24.4	7.0	14.2	21.3
		76	TC	—	59.2	59.2	—	54.5	54.5	—	—	—	—	—	—	—	—	—
			SHC	—	21.0	28.3	—	18.2	25.5	—	—	—	—	—	—	—	—	—
1500 cfm	EAT (wb)	58	TC	42.2	42.2	48.4	38.5	38.5	44.5	34.7	34.7	40.5	30.8	30.8	36.3	26.8	26.8	31.9
			SHC	35.9	42.2	48.4	32.6	38.5	44.5	29.0	34.7	40.5	25.4	30.8	36.3	21.6	26.8	31.9
		62	TC	43.0	43.0	49.3	38.8	38.8	46.2	34.8	34.8	42.5	30.9	30.9	38.2	26.8	26.8	33.7
			SHC	33.4	41.4	49.3	30.5	38.3	46.2	27.2	34.8	42.5	23.6	30.9	38.2	20.0	26.8	33.7
		67	TC	48.9	48.9	48.9	44.4	44.4	44.4	39.7	39.7	39.7	34.9	34.9	34.9	29.9	29.9	30.7
			SHC	26.7	34.7	42.7	23.8	31.8	39.8	20.8	28.8	36.8	17.8	25.8	33.8	14.7	22.7	30.7
		72	TC	55.3	55.3	55.3	50.6	50.6	50.6	45.7	45.7	45.7	40.6	40.6	40.6	35.4	35.4	35.4
			SHC	19.7	27.8	35.8	16.8	24.9	32.9	13.9	21.9	30.0	10.9	18.9	27.0	7.8	15.8	23.9
		76	TC	—	60.8	60.8	—	—	—	—	—	—	—	—	—	—	—	—
			SHC	—	22.2	30.4	—	—	—	—	—	—	—	—	—	—	—	—
1700 cfm	EAT (wb)	58	TC	44.7	44.7	51.1	40.8	40.8	47.0	36.9	36.9	42.9	32.8	32.8	38.4	28.6	28.6	33.9
			SHC	38.2	44.7	51.1	34.6	40.8	47.0	31.0	36.9	42.9	27.2	32.8	38.4	23.3	28.6	33.9
		62	TC	44.7	44.7	53.4	40.9	40.9	49.2	37.0	37.0	44.9	32.9	32.9	40.4	28.6	28.6	35.7
			SHC	36.0	44.7	53.4	32.6	40.9	49.2	29.0	37.0	44.9	25.3	32.9	40.4	21.5	28.6	35.7
		67	TC	50.1	50.1	50.1	45.5	45.5	45.5	40.8	40.8	40.8	35.9	35.9	37.7	30.8	30.8	34.5
			SHC	28.7	37.7	46.7	25.7	34.8	43.8	22.7	31.7	40.8	19.7	28.7	37.7	16.6	25.5	34.5
		72	TC	56.7	56.7	56.7	51.9	51.9	51.9	46.8	46.8	46.8	41.6	41.6	41.6	36.2	36.2	36.2
			SHC	20.7	29.8	38.9	17.8	26.8	35.9	14.8	23.8	32.9	11.7	20.8	29.8	8.6	17.7	26.7
		76	TC	—	—	—	—	—	—	—	—	—	—	—	—	—	—	—
			SHC	—	—	—	—	—	—	—	—	—	—	—	—	—	—	—
1875 cfm	EAT (wb)	58	TC	46.5	46.5	53.2	42.6	42.6	49.0	38.5	38.5	44.6	34.3	34.3	40.1	29.9	29.9	35.4
			SHC	39.8	46.5	53.2	36.2	42.6	49.0	32.4	38.5	44.6	28.5	34.3	40.1	24.5	29.9	35.4
		62	TC	46.6	46.6	55.5	42.6	42.6	51.2	38.6	38.6	46.8	34.4	34.4	42.1	30.0	30.0	37.3
			SHC	37.7	46.6	55.5	34.1	42.6	51.2	30.4	38.6	46.8	26.6	34.4	42.1	22.7	30.0	37.3
		67	TC	51.1	51.1	51.1	46.4	46.4	47.1	41.5	41.5	44.1	36.5	36.5	40.9	31.4	31.4	37.7
			SHC	30.4	40.3	50.2	27.4	37.3	47.1	24.3	34.2	44.1	21.2	31.0	40.9	18.0	27.9	37.7
		72	TC	57.7	57.7	57.7	52.7	52.7	52.7	47.6	47.6	47.6	42.3	42.3	42.3	—	—	—
			SHC	21.5	31.5	41.4	18.5	28.5	38.4	15.5	25.5	35.4	12.4	22.4	32.3	—	—	—
		76	TC	—	—	—	—	—	—	—	—	—	—	—	—	—	—	—
			SHC	—	—	—	—	—	—	—	—	—	—	—	—	—	—	—

LEGEND

— — Do Not Operate
cfm — Cubic Feet Per Minute (Supply Air)
EAT (db) — Entering Air Temperature (dry bulb)
EAT (wb) — Entering Air Temperature (wet bulb)
SHC — Sensible Heat Capacity (1000 Btuh) Gross
TC — Total Capacity (1000 Btuh) Gross

NOTE: See minimum-maximum airflow ratings on page 5.

Performance data (cont)

RHV102 Two Stage Cooling Capacities

RHV102				AMBIENT TEMPERATURE (°F)														
				85			95			105			115			125		
				EAT (db)			EAT (db)			EAT (db)			EAT (db)			EAT (db)		
				75	80	85	75	80	85	75	80	85	75	80	85	75	80	85
2550 cfm	EAT (wb)	58	TC	86.2	86.2	97.9	81.2	81.2	92.5	76.0	76.0	86.8	70.5	70.5	80.9	64.8	64.8	74.6
			SHC	74.4	86.2	97.9	69.8	81.2	92.5	65.1	76.0	86.8	60.1	70.5	80.9	55.0	64.8	74.6
		62	TC	91.1	91.1	93.5	85.0	85.0	89.7	78.7	78.7	85.8	72.2	72.2	81.6	65.5	65.5	77.1
			SHC	67.2	80.4	93.5	63.5	76.6	89.7	59.6	72.7	85.8	55.6	68.6	81.6	51.4	64.3	77.1
		67	TC	101.5	101.5	101.5	95.0	95.0	95.0	88.3	88.3	88.3	81.2	81.2	81.2	73.9	73.9	73.9
			SHC	55.1	68.3	81.5	51.3	64.6	77.8	47.5	60.8	74.0	43.7	56.9	70.1	39.7	52.9	66.1
		72	TC	112.8	112.8	112.8	106.0	106.0	106.0	98.8	98.8	98.8	91.3	91.3	91.3	83.5	83.5	83.5
			SHC	42.5	55.9	69.3	38.9	52.2	65.5	35.1	48.4	61.7	31.2	44.5	57.8	27.3	40.6	53.8
		76	TC	—	122.4	122.4	—	115.2	115.2	—	107.6	107.6	—	99.8	99.8	—	91.5	91.5
			SHC	—	45.8	59.9	—	42.2	56.1	—	38.4	52.3	—	34.6	48.3	—	30.6	44.3
3000 cfm	EAT (wb)	58	TC	91.9	91.9	104.4	86.7	86.7	98.6	81.1	81.1	92.6	75.3	75.3	86.2	69.3	69.3	79.6
			SHC	79.5	91.9	104.4	74.7	86.7	98.6	69.7	81.1	92.6	64.4	75.3	86.2	58.9	69.3	79.6
		62	TC	94.6	94.6	103.8	88.4	88.4	99.7	82.0	82.0	95.3	75.5	75.5	90.0	69.4	69.4	83.2
			SHC	73.5	88.6	103.8	69.6	84.6	99.7	65.4	80.4	95.3	60.9	75.5	90.0	55.6	69.4	83.2
		67	TC	105.1	105.1	105.1	98.3	98.3	98.3	91.3	91.3	91.3	83.9	83.9	83.9	76.2	76.2	76.2
			SHC	59.2	74.6	90.0	55.5	70.8	86.2	51.6	66.9	82.3	47.7	63.0	78.3	43.6	58.9	74.2
		72	TC	116.6	116.6	116.6	109.4	109.4	109.4	101.9	101.9	101.9	94.1	94.1	94.1	86.0	86.0	86.0
			SHC	44.5	59.9	75.4	40.7	56.2	71.6	36.9	52.3	67.8	33.0	48.4	63.8	29.0	44.3	59.7
		76	TC	—	126.3	126.3	—	118.7	118.7	—	110.9	110.9	—	102.6	102.6	—	94.0	94.0
			SHC	—	48.1	64.1	—	44.3	60.3	—	40.5	56.4	—	36.6	52.4	—	32.5	48.3
3400 cfm	EAT (wb)	58	TC	96.3	96.3	109.2	90.8	90.8	103.2	85.0	85.0	96.9	78.9	78.9	90.2	72.6	72.6	83.3
			SHC	83.4	96.3	109.2	78.4	90.8	103.2	73.1	85.0	96.9	67.6	78.9	90.2	61.9	72.6	83.3
		62	TC	97.4	97.4	111.9	92.2	92.2	103.5	85.1	85.1	101.0	79.0	79.0	94.1	72.7	72.7	87.0
			SHC	78.4	95.2	111.9	72.5	88.0	103.5	69.2	85.1	101.0	63.9	79.0	94.1	58.4	72.7	87.0
		67	TC	107.5	107.5	107.5	100.6	100.6	100.6	93.3	93.3	93.3	85.7	85.7	85.7	77.9	77.9	81.1
			SHC	62.7	79.9	97.1	58.9	76.1	93.3	55.0	72.1	89.3	51.0	68.1	85.2	46.9	64.0	81.1
		72	TC	119.1	119.1	119.1	111.8	111.8	111.8	104.0	104.0	104.0	96.0	96.0	96.0	87.6	87.6	87.6
			SHC	45.9	63.3	80.6	42.2	59.4	76.7	38.3	55.5	72.8	34.3	51.5	68.7	30.3	47.4	64.6
		76	TC	—	128.9	128.9	—	121.1	121.1	—	113.0	113.0	—	104.6	104.6	—	95.7	95.7
			SHC	—	49.8	67.6	—	46.0	63.8	—	42.1	59.8	—	38.2	55.7	—	34.1	51.5
3850 cfm	EAT (wb)	58	TC	100.5	100.5	113.9	94.7	94.7	107.6	88.7	88.7	101.0	82.3	82.3	94.0	75.7	75.7	86.8
			SHC	87.1	100.5	113.9	81.8	94.7	107.6	76.4	88.7	101.0	70.6	82.3	94.0	64.7	75.7	86.8
		62	TC	100.6	100.6	118.5	94.8	94.8	112.0	88.8	88.8	105.2	82.4	82.4	98.1	75.8	75.8	90.6
			SHC	82.7	100.6	118.5	77.7	94.8	112.0	72.3	88.8	105.2	66.8	82.4	98.1	61.0	75.8	90.6
		67	TC	109.7	109.7	109.7	102.6	102.6	102.6	95.1	95.1	96.9	87.4	87.4	92.7	79.4	79.4	88.3
			SHC	66.4	85.6	104.8	62.5	81.7	100.9	58.6	77.7	96.9	54.5	73.6	92.7	50.4	69.3	88.3
		72	TC	121.4	121.4	121.4	113.8	113.8	113.8	105.9	105.9	105.9	97.7	97.7	97.7	89.1	89.1	89.1
			SHC	47.4	66.8	86.1	43.6	62.9	82.2	39.7	58.9	78.2	35.7	54.9	74.1	31.6	50.8	69.9
		76	TC	—	131.2	131.2	—	123.2	123.2	—	114.9	114.9	—	106.3	106.3	—	—	—
			SHC	—	51.6	71.3	—	47.7	67.4	—	43.8	63.4	—	39.7	59.2	—	—	—
4250 cfm	EAT (wb)	58	TC	103.7	103.7	117.4	97.7	97.7	110.9	91.4	91.4	104.0	84.9	84.9	96.9	78.1	78.1	89.5
			SHC	89.9	103.7	117.4	84.5	97.7	110.9	78.8	91.4	104.0	72.9	84.9	96.9	66.8	78.1	89.5
		62	TC	103.8	103.8	122.1	97.8	97.8	115.4	91.5	91.5	108.4	85.0	85.0	101.0	78.2	78.2	93.3
			SHC	85.4	103.8	122.1	80.2	97.8	115.4	74.7	91.5	108.4	69.0	85.0	101.0	63.1	78.2	93.3
		67	TC	111.3	111.3	111.4	104.0	104.0	107.4	96.4	96.4	103.3	88.6	88.6	99.0	80.5	80.5	94.4
			SHC	69.5	90.5	111.4	65.6	86.5	107.4	61.6	82.4	103.3	57.5	78.2	99.0	53.3	73.8	94.4
		72	TC	123.1	123.1	123.1	115.4	115.4	115.4	107.3	107.3	107.3	98.9	98.9	98.9	90.2	90.2	90.2
			SHC	48.6	69.7	90.8	44.8	65.8	86.8	40.8	61.8	82.8	36.8	57.7	78.7	32.7	53.6	74.5
		76	TC	—	132.9	132.9	—	124.8	124.8	—	116.3	116.3	—	—	—	—	—	—
			SHC	—	52.9	74.4	—	49.1	70.4	—	45.1	66.4	—	—	—	—	—	—

LEGEND

— — Do Not Operate
cfm — Cubic Feet Per Minute (Supply Air)
EAT (db) — Entering Air Temperature (dry bulb)
EAT (wb) — Entering Air Temperature (wet bulb)
SHC — Sensible Heat Capacity (1000 Btuh) Gross
TC — Total Capacity (1000 Btuh) Gross

NOTE: See minimum-maximum airflow ratings on page 5.

Performance data (cont)

RHV102 Single Stage Cooling Capacities

RHV102				AMBIENT TEMPERATURE (°F)														
				85			95			105			115			125		
				EAT (db)			EAT (db)			EAT (db)			EAT (db)			EAT (db)		
				75	80	85	75	80	85	75	80	85	75	80	85	75	80	85
1300 cfm	EAT (wb)	58	TC	45.2	45.2	51.5	42.4	42.4	48.5	39.5	39.5	45.4	36.4	36.4	42.0	33.2	33.2	38.5
			SHC	38.9	45.2	51.5	36.3	42.4	48.5	33.6	39.5	45.4	30.8	36.4	42.0	27.9	33.2	38.5
		62	TC	48.0	48.0	49.1	44.7	44.7	46.9	41.1	41.1	44.7	37.4	37.4	42.3	33.5	33.5	39.8
			SHC	35.1	42.1	49.1	32.9	39.9	46.9	30.7	37.7	44.7	28.4	35.3	42.3	25.9	32.9	39.8
		67	TC	54.0	54.0	54.0	50.5	50.5	50.5	46.7	46.7	46.7	42.7	42.7	42.7	38.5	38.5	38.5
			SHC	29.0	36.0	43.0	26.8	33.8	40.8	24.6	31.6	38.6	22.3	29.3	36.3	19.9	26.9	33.9
		72	TC	60.6	60.6	60.6	56.9	56.9	56.9	52.9	52.9	52.9	48.6	48.6	48.6	44.1	44.1	44.1
			SHC	22.7	29.8	36.8	20.6	27.6	34.7	18.3	25.4	32.5	16.1	23.1	30.2	13.7	20.8	27.8
		76	TC	—	66.3	66.3	—	62.4	62.4	—	58.2	58.2	—	53.7	53.7	—	—	—
			SHC	—	24.6	31.8	—	22.5	29.7	—	20.3	27.5	—	18.1	25.2	—	—	—
1500 cfm	EAT (wb)	58	TC	48.2	48.2	54.9	45.3	45.3	51.7	42.2	42.2	48.4	39.0	39.0	44.9	35.5	35.5	41.1
			SHC	41.6	48.2	54.9	38.9	45.3	51.7	36.1	42.2	48.4	33.1	39.0	44.9	30.0	35.5	41.1
		62	TC	49.9	49.9	54.3	46.4	46.4	52.0	42.8	42.8	49.6	39.3	39.3	46.4	35.6	35.6	43.0
			SHC	38.2	46.3	54.3	36.0	44.0	52.0	33.7	41.7	49.6	31.0	38.7	46.4	28.2	35.6	43.0
		67	TC	56.0	56.0	56.0	52.3	52.3	52.3	48.3	48.3	48.3	44.2	44.2	44.2	39.8	39.8	39.8
			SHC	31.1	39.2	47.2	28.9	37.0	45.0	26.6	34.7	42.8	24.3	32.4	40.4	21.9	29.9	38.0
		72	TC	62.7	62.7	62.7	58.8	58.8	58.8	54.6	54.6	54.6	50.2	50.2	50.2	45.5	45.5	45.5
			SHC	23.8	31.9	40.0	21.6	29.7	37.8	19.4	27.5	35.6	17.0	25.1	33.2	14.6	22.7	30.8
		76	TC	—	68.5	68.5	—	64.3	64.3	—	—	—	—	—	—	—	—	—
			SHC	—	26.0	34.2	—	23.8	32.1	—	—	—	—	—	—	—	—	—
1700 cfm	EAT (wb)	58	TC	50.8	50.8	57.8	47.8	47.8	54.5	44.6	44.6	51.0	41.2	41.2	47.3	37.5	37.5	43.3
			SHC	43.9	50.8	57.8	41.1	47.8	54.5	38.1	44.6	51.0	35.0	41.2	47.3	31.7	37.5	43.3
		62	TC	51.5	51.5	59.1	48.3	48.3	55.8	44.6	44.6	53.2	41.2	41.2	49.4	37.6	37.6	45.4
			SHC	41.2	50.2	59.1	38.5	47.2	55.8	36.1	44.6	53.2	33.0	41.2	49.4	29.9	37.6	45.4
		67	TC	57.5	57.5	57.5	53.7	53.7	53.7	49.6	49.6	49.6	45.3	45.3	45.3	40.8	40.8	41.9
			SHC	33.1	42.2	51.3	30.9	40.0	49.1	28.6	37.7	46.8	26.2	35.3	44.4	23.8	32.8	41.9
		72	TC	64.3	64.3	64.3	60.2	60.2	60.2	56.0	56.0	56.0	51.4	51.4	51.4	46.6	46.6	46.6
			SHC	24.8	33.9	43.1	22.6	31.7	40.9	20.3	29.4	38.5	17.9	27.1	36.2	15.5	24.6	33.7
		76	TC	—	70.2	70.2	—	—	—	—	—	—	—	—	—	—	—	—
			SHC	—	27.2	36.4	—	—	—	—	—	—	—	—	—	—	—	—
1950 cfm	EAT (wb)	58	TC	53.7	53.7	60.9	50.4	50.4	57.4	47.0	47.0	53.7	43.5	43.5	49.8	39.7	39.7	45.7
			SHC	46.4	53.7	60.9	43.4	50.4	57.4	40.3	47.0	53.7	37.1	43.5	49.8	33.6	39.7	45.7
		62	TC	53.7	53.7	63.4	50.5	50.5	59.8	47.1	47.1	56.1	43.5	43.5	52.1	39.7	39.7	47.8
			SHC	44.0	53.7	63.4	41.2	50.5	59.8	38.2	47.1	56.1	35.0	43.5	52.1	31.7	39.7	47.8
		67	TC	59.0	59.0	59.0	55.0	55.0	55.0	50.9	50.9	51.6	46.4	46.4	49.2	41.8	41.8	46.6
			SHC	35.5	45.9	56.2	33.2	43.6	54.0	30.9	41.3	51.6	28.5	38.8	49.2	26.0	36.3	46.6
		72	TC	65.9	65.9	65.9	61.7	61.7	61.7	57.3	57.3	57.3	52.6	52.6	52.6	47.6	47.6	47.6
			SHC	25.9	36.3	46.7	23.6	34.0	44.5	21.3	31.7	42.1	18.9	29.3	39.7	16.5	26.9	37.2
		76	TC	—	—	—	—	—	—	—	—	—	—	—	—	—	—	—
			SHC	—	—	—	—	—	—	—	—	—	—	—	—	—	—	—
2150 cfm	EAT (wb)	58	TC	55.6	55.6	63.0	52.2	52.2	59.4	48.7	48.7	55.6	45.1	45.1	51.6	41.1	41.1	47.3
			SHC	48.1	55.6	63.0	45.0	52.2	59.4	41.9	48.7	55.6	38.5	45.1	51.6	34.9	41.1	47.3
		62	TC	55.6	55.6	65.6	52.3	52.3	61.9	48.8	48.8	58.0	45.1	45.1	53.9	41.2	41.2	49.5
			SHC	45.6	55.6	65.6	42.7	52.3	61.9	39.6	48.8	58.0	36.3	45.1	53.9	32.9	41.2	49.5
		67	TC	60.0	60.0	60.0	55.9	55.9	57.7	51.7	51.7	55.3	47.2	47.2	52.8	42.5	42.5	50.2
			SHC	37.3	48.7	60.0	35.0	46.4	57.7	32.7	44.0	55.3	30.2	41.5	52.8	27.7	38.9	50.2
		72	TC	66.9	66.9	66.9	62.6	62.6	62.6	58.1	58.1	58.1	53.3	53.3	53.3	—	—	—
			SHC	26.7	38.1	49.5	24.4	35.9	47.3	22.1	33.5	44.9	19.7	31.1	42.5	—	—	—
		76	TC	—	—	—	—	—	—	—	—	—	—	—	—	—	—	—
			SHC	—	—	—	—	—	—	—	—	—	—	—	—	—	—	—

LEGEND

— — Do Not Operate
cfm — Cubic Feet Per Minute (Supply Air)
EAT (db) — Entering Air Temperature (dry bulb)
EAT (wb) — Entering Air Temperature (wet bulb)
SHC — Sensible Heat Capacity (1000 Btuh) Gross
TC — Total Capacity (1000 Btuh) Gross

NOTE: See minimum-maximum airflow ratings on page 5.