TEMPSTAR®
Heating and Cooling Products

TSA6

SmartComfort™ TXC 5600

Product Specifications

16 SEER SINGLE STAGE AIR CONDITIONER WITH OBSERVER® COMMUNICATING CONTROL SYSTEM

1½ THRU 5 TONS SPLIT SYSTEM — 208 / 230 Volt, 1–phase, 60 Hz

REFRIGERATION CIRCUIT
- Scroll compressors on all models
- Filter–drier supplied with every unit for field installation
- External high and low refrigerant service ports
- Copper tube / aluminum fin coil

PERFORMANCE
- Communicating, self–configuring operation when used with Observer or Ion Wall Controls
- Outdoor temperature sensor factory installed
- Compressor sound blanket standard
- Isolation compressor grommets

EASY TO INSTALL AND SERVICE
- Text based diagnostics with Observer or Ion Communicating Wall Controls
- Easy access service valves on all models
- Innovative control box design
- High and low pressure switches
- Only two screws to access control panel
- Factory charged with R–410A refrigerant

BUILT TO LAST
- High gloss, baked–on powder coat finish over galv. steel
- Post–painted (black) coil fins
- Coated, weather–resistant cabinet screws
- Coated inlet grille with 3/8" (10mm) spacing for extra protection
- Corner posts for extra strength and style

LIMITED WARRANTY*
- 5–year No Hassle Replacement™ limited warranty
- 5–year parts limited warranty (include compressor & coil)
  - With timely registration, an additional 5–year parts limited warranty (including compressor and coil)

* For residential applications only. See warranty certificate for complete details and restrictions, including warranty coverage for other applications.

ENERGY STAR PARTNER

This product has been designed and manufactured to meet ENERGY STAR criteria for energy efficiency when matched with appropriate coil components. However, proper refrigerant charge and proper air flow are critical to achieve rated capacity and efficiency. Installation of this product should follow the manufacturer's refrigerant charging and air flow instructions. Failure to confirm proper charge and airflow may reduce energy efficiency and shorten equipment life.

c UL us LISTED

AHRI CERTIFIED™ www.ahridirectory.org

Use of the AHRI Certified TM Mark indicates a manufacturer's participation in the program. For verification of certification for individual products, go to www.ahridirectory.org .

Model Number	Size (tons)	Nominal Btu/hr	Min. Circuit Ampacity	Max. Fuse or Breaker	Operating Dimensions height x width x depth in. (mm)	Ship / Operating Weight lbs. (kg)
TSA618GKA	1½	18,000	11.8	20	28–11/16 x 31–3/16 x 31–3/16 (729 x 792 x 792)	213 / 176 (96 / 80)
TSA624GKA	2	24,000	17.6	25	28–11/16 x 31–3/16 x 31–3/16 (729 x 792 x 792)	212 / 176 (96 / 80)
TSA630GKA	2½	30,000	16.7	25	32–1/8 x 31–3/16 x 31–3/16 (816 x 792 x 792)	223 / 187 (101 / 85)
TSA636GKA	3	36,000	18.1	30	30–1/16 x 35 x 35 (764 x 889 x 889)	243 / 200 (110 / 91)
TSA642GKA	3½	42,000	23.6	40	40–1/4 x 35 x 35 (1023 x 889 x 889)	297 / 253 (135 / 115)
TSA648GKA	4	48,000	26.1	40	40–1/4 x 35 x 35 (1023 x 889 x 889)	340 / 295 (155 / 114)
TSA660GKA	5	60,000	28.0	40	47–1/16 x 35 x 35 (1196 x 889 x 889)	374 / 327 (169 / 148)

OUTDOOR UNIT MODEL NUMBER IDENTIFICATION GUIDE (single phase)

Digit Position:	1	2	3	4	5, 6	7	8	9	10	11	12
Example Part Number:	**T**	**S**	**A**	**6**	**18**	**G**	**K**	**A**	**1**	**0**	**0**

BRANDING
- T = Tempstar Mainline
- N = Tempstar Entry

KEY CHARACTERISTIC
- S = Single Stage
- Communicating

TYPE
- A = Air Conditioner
- H = Heat Pump

NOMINAL EFFICIENCY
- 3 = 13 SEER
- 4 = 14 SEER
- 5 = 15 SEER
- 6 = 16 SEER
- 7 = 17 SEER
- 8 = 18 SEER

NOMINAL CAPACITY
- 18 = 18,000 BTUH = 1½ tons
- 24 = 24,000 BTUH = 2 tons
- 30 = 30,000 BTUH = 2½ tons
- 36 = 36,000 BTUH = 3 tons
- 42 = 42,000 BTUH = 3½ tons
- 48 = 48,000 BTUH = 4 tons
- 60 = 60,000 BTUH = 5 tons

FEATURES
- A = Standard Grille
- G = Coil Guard Grille
- C = Coastal

VOLTAGE
- K = 208/230–1–60

Sales Code

Engineering Revision

Extra Digit

Extra Digit

ACCESSORIES PART NUMBER IDENTIFICATION GUIDE

Digit Position:	1	2	3	4	5	6, 7	8, 9	10, 11
Example Part Number:	**N**	**A**	**S**	**A**	**0**	**0 1**	**01**	**C H**

- N = Non–Branded

PRODUCT GROUP
- A = Accessory

KIT USAGE
- S = Split System (AC & HP)

MAJOR SERIES
- A = Original
- B = 2nd Generation

REFRIGERANT
- 0 = Generic or Not Applicable
- 4 = R–410A

Product Identifier Number

Package Quantity

Type of Kit (Example: CH = Crankcase Heater)

UNIT	SERIES	ELECTRICAL CHARACTERISTICS				A		B		C		D		E		F		G		H		I		J		K		OPERATING WEIGHT		SHIPPING WEIGHT		SHIPPING LENGTH / WIDTH (Sq.)		SHIPPING HEIGHT	
						INCH	MM	INCH	MM	INCH	MM	INCH	MM	INCH	MM	INCH	MM	INCH	MM	INCH	MM	INCH	MM	INCH	MM	INCH	MM	Lbs	Kgs	Lbs	Kgs	INCH	MM	INCH	MM
*SA618GKA100	1	Y	N	N	N	31 3/16	792.5	28 11/16	729.3	3/4	19.1	6 9/16	166.1	24 11/16	626.3	9 1/8	231.3	5/16	7.9	3	76.2	15 1/2	393.7	17	431.8	14	355.6	176	79.8	213	96.6	33 5/16	846.6	33 3/16	843.1
*SA624GKA100	1	Y	N	N	N	31 3/16	792.5	28 11/16	729.3	3/4	19.1	6 9/16	166.1	24 11/16	626.3	9 1/8	231.3	5/16	7.9	3	76.2	16 1/4	412.8	15 1/4	387.4	14	355.6	176	79.8	213	96.6	33 5/16	846.6	33 3/16	843.1
*SA630GKA100	1	Y	N	N	N	31 3/16	792.5	32 1/8	815.6	3/4	19.1	6 9/16	166.1	24 11/16	626.3	9 1/8	231.3	5/16	7.9	3	76.2	15	381.0	15 3/4	400.1	14 3/4	374.7	187	84.8	223	101.2	33 5/16	846.6	36 5/8	929.5
*SA636GKA100	1	Y	N	N	N	35	889.0	30 3/16	767.2	7/8	22.2	6 9/16	166.1	28 7/16	722.8	9 1/8	231.3	5/16	7.9	3	76.2	17	431.8	16 3/4	425.5	14	355.6	200	90.7	243	110.2	37 1/8	943.1	36 5/8	929.5
*SA642GKA100	1	Y	N	N	N	35	889.0	40 3/8	1026.3	7/8	22.2	6 9/16	166.1	28 7/16	722.8	9 1/8	231.3	5/16	7.9	3	76.2	17	431.8	16	406.4	18 1/2	469.9	253	114.8	297	134.7	37 1/8	943.1	45 1/4	1149.1
*SA648GKA100	1	Y	N	N	N	35	889.0	40 3/8	1026.3	7/8	22.2	6 9/16	166.1	28 7/16	722.8	9 1/8	231.3	5/16	7.9	3	76.2	17 1/2	444.5	16 1/4	412.8	18	457.2	295	133.8	340	154.2	37 1/8	943.1	45 1/4	1149.1
*SA660GKA100	1	Y	N	N	N	35	889.0	47 3/16	1199.0	7/8	22.2	6 9/16	166.1	28 7/16	722.8	9 1/8	231.3	5/16	7.9	3	76.2	17 1/2	444.5	17 1/4	438.2	21	533.4	327	148.3	374	169.6	37 1/8	943.1	52 7/16	1332.0
*SA660GKB101	1	Y	N	N	N	35	889.0	47 3/16	1199.0	7/8	22.2	6 9/16	166.1	28 7/16	722.8	9 1/8	231.3	5/16	7.9	3	76.2	18	457.2	18	457.2	19 1/2	495.3	299	135.6	336	152.4	37 1/8	943.1	52 7/16	1332.0

208-230-1-60	208/230-3-60	460-3-60	575-3-60	Y=YES N=NO

NOTES:

1. CENTER OF GRAVITY .

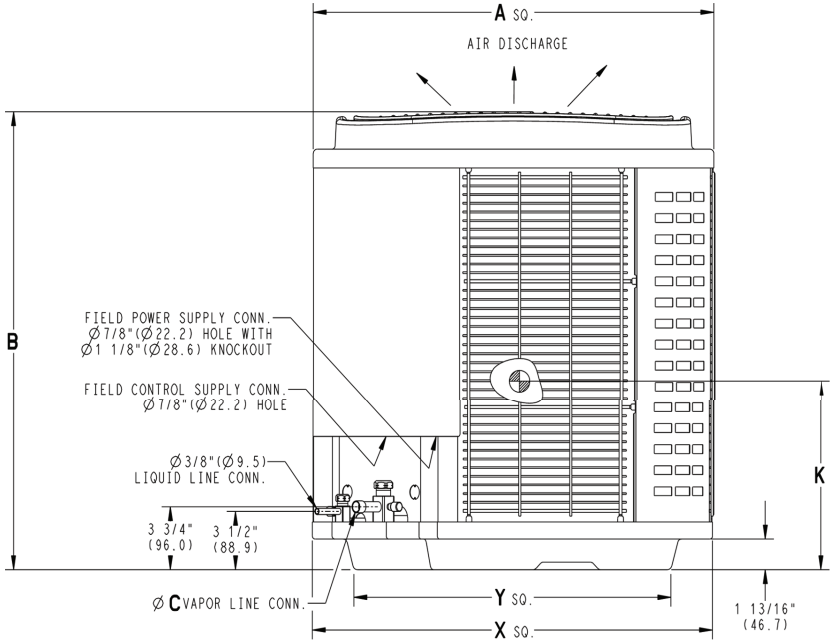

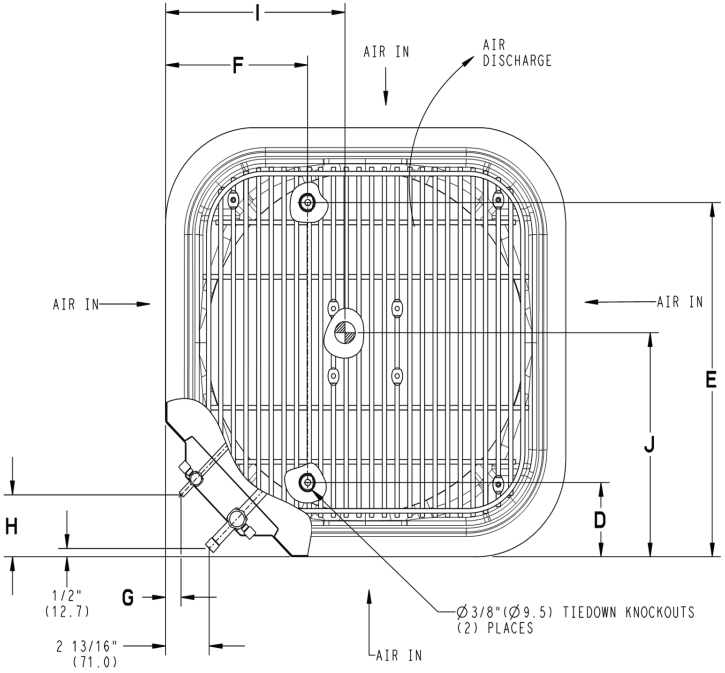

UNIT SIZE	"X" MINIMUM GROUND MOUNTING PAD APPLICATION DIMENSIONS		"Y" MINIMUM ROOF-TOP MOUNTING PAD APPLICATION DIMENSIONS	
-	23 1/8	587.3	17 7/8	454.6
-	25 3/4	654.0	20 7/16	518.5
18,24,30	31 3/16	792.5	22 15/16	583.2
36,42,48,60	35	889.0	26 3/4	679.7

NOTE: ALL DIMENSIONS IN INCH (MM)

U.S. ECCN: Not Subject to Regulation (N.S.R.)

SD5068-4 REV. D

PHYSICAL DATA

Model Size	18	24	30	36	42	48	60
Compressor Type	Scroll						
REFRIGERANT	R−410A						
Control	TXV (R−410A Hard shutoff)						
Charge lb (Kg)	5.25 (2.38)	6.00 (2.72)	6.81 (3.09)	7.00 (3.18)	8.62 (3.91)	13.00 (5.9)	14.00 (6.35)
COND FAN	Propeller Type, Direct Drive						
Air Discharge	Vertical						
Air Qty (CFM)	2233	2614	2614	3223	3810	4046	4700
Motor HP	1/12	1/10	1/10	1/12	1/5	1/4	1/3
Motor RPM	800	800	800	800	800	800	815
COND COIL							
Face Area (Sq ft)	15.07	15.07	17.22	17.58	25.12	25.12	30.14
Fins per In.	25	25	25	25	25	20	20
Rows	1	1	1	1	1	2	2
Circuits	3	4	4	4	6	7	12
VALVE CONNECT. (In. ID)							
Vapor	3/4	3/4	3/4	7/8	7/8	7/8	7/8
Liquid	3/8	3/8	3/8	3/8	3/8	3/8	3/8
REFRIGERANT TUBES (In. OD)							
Rated Vapor*	3/4			7/8			1−1/8
Max Liquid Line	3/8”						

* Units are rated with 25 ft (7.6 m) of lineset length. See *Vapor Line Sizing and Cooling Capacity Loss* table when using other sizes and lengths of lineset.

ELECTRICAL DATA

UNIT SIZE	V/PH	OPER VOLTS*		COMPR		FAN	MCA	MAX FUSE** or CKT BRK AMPS
		MAX	MIN	LRA	RLA	FLA		
18	208/230/1	253	197	48.0	9.0	0.45	11.8	20
24				58.3	13.5	0.70	17.5	25
30				64.0	12.8	0.70	16.7	25
36				77.0	14.1	0.60	18.2	30
42				112.0	17.9	1.00	23.4	40
48				109.0	19.9	1.20	26.1	40
60				152.5	23.7	2.80	32.4	50

* Permissible limits of the voltage range at which the unit will operate satisfactorily
** Time−Delay fuse.
FLA – Full Load Amps
LRA – Locked Rotor Amps
MCA – Minimum Circuit Amps
RLA – Rated Load Amps
NOTE: Control circuit is 24−V on all units and requires external power source. Copper wire must be used from service disconnect to unit.
All motors/compressors contain internal overload protection.
Complies with 2007 requirements of ASHRAE Standards 90.1

A−WEIGHTED SOUND POWER (dBA)

UNIT SIZE	STANDARD RATING	TYPICAL OCTAVE BAND SPECTRUM (without tone adjustment)						
		125	250	500	1000	2000	4000	8000
18	66	52.0	56.5	60.5	61.5	59.0	53.5	44.5
24	67	51.5	58.0	61.5	62.5	59.5	54.0	47.5
30	68	56.5	60.0	63.0	62.5	59.5	54.5	46.0
36	69	55.5	61.0	62.0	62.5	61.0	57.0	49.0
42	68	53.0	60.5	62.0	63.0	60.5	58.0	51.0
48	70	55.0	61.0	63.5	63.0	60.5	57.0	52.0
60	73	67.0	68.0	68.0	71.0	63.0	55.0	52.0

NOTE: Tested in accordance with AHRI Standard 270−08 (not listed in AHRI).

CHARGING SUBCOOLING (TXV–TYPE EXPANSION DEVICE)

UNIT SIZE	REQUIRED SUBCOOLING °F (°C)
18	10 (5.6)
24	10 (5.6)
30	10 (5.6)
36	10 (5.6)
42	9 (5.0)
48	10 (5.6)
60	9 (5.0)

REFRIGERANT CHARGE ADJUSTMENTS

Liquid Line Size	R—410A Charge oz/ft (g/m)
3/8	0.60 (17.74) (Factory charge for lineset = 9 oz / 266.16 g)
5/16	0.40 (11.83)
1/4	0.27 (7.98)

Units are factory charged for 15 ft (4.6 m) of 3/8” liquid line. The factory charge for 3/8” lineset 9 oz. When using other length or diameter liquid lines, charge adjustments are required per the chart above.

Charging Formula:

[(Lineset oz/ft x total length) – (factory charge for lineset)] = charge adjustment

Example 1: System has 15 ft of line set using existing 1/4“ liquid line. What charge adjustment is required?

Formula: (.27 oz/ft x 15ft) – (9 oz) = (-4.95) oz.

Net result is to remove 4.95 oz of refrigerant from the system

Example 2: System has 45 ft of existing 5/16” liquid line. What is the charge adjustment?

Formula: (.40 oz/ft. x 45ft) – (9 oz.) = 9 oz.

Net result is to add 9 oz of refrigerant to the system

NOTE: Conditions must be favorable for charging by subcooling method. Indoor temperature must be 70°F to 80°F (21.1°C to 26.7°C), and outdoor temperature must be 70°F to 100°F (21.1°C to 37.8°C). If outside these conditions, adjust charge for long line sets by weigh–in method.

LONG LINE APPLICATIONS

An application is considered Long Line, when the refrigerant level in the system requires the use of accessories to maintain acceptable refrigerant management for systems reliability. See Accessory Usage Guideline table for required accessories. Defining a system as long line depends on the liquid line diameter, actual length of the tubing, and vertical separation between the indoor and outdoor units. For Air Conditioner systems, the charts below shows when an application requires a TXV and long line accessories due to lineset length.

For Air Conditioner systems, the charts below show when an application is considered Long Line:

AC with R–410A Refrigerant Long Line Description ft (m) Beyond these lengths, a TXV is required

Total Length	Outdoor Unit Above or Below Indoor Unit
TXV required beyond 50 ft. (15.2 m)	TXV required beyond 20 ft. (6.1 m)

AC with R–410A Refrigerant Long Line Description ft (m) (Beyond these lengths, long line accessories are required)

Liquid Line Size	Units On Same Level	Outdoor Below Indoor	Outdoor Above Indoor
1/4 + TXV	No accessories needed within allowed lengths	No accessories needed within allowed lengths	175 (53.3)
5/16 + TXV	120 (36.6)	50 (15.2) vertical or 120 (36.6) total	120 (36.6)
3/8 + TXV	80 (24.4)	35 (10.7) vertical or 80 (24.4) total	80 (24.4)

VAPOR LINE SIZING AND COOLING CAPACITY LOSS

Acceptable vapor line diameters provide adequate oil return to the compressor while avoiding excessive capacity loss. The suction line diameters shown in the chart below are acceptable for AC systems with R–410A refrigerant:

Vapor Line Sizing and Cooling Capacity Losses — R–410A Refrigerant 1–Stage Air Conditioner Applications

Unit Nominal Size (Btuh)	Maximum Liquid Line Diameters (In. OD)	Vapor Line Diameters (In. OD)	Cooling Capacity Loss (%) Total Equivalent Line Length ft. (m)								
			26–50 (7.9–15.2)	51–80 (15.5–24.4)	81–100 (24.7–30.5)	101–125 (30.8–38.1)	126–150 (38.4–45.7)	151–175 (46.0–53.3)	176–200 (53.6–61.0)	201–225 (61.3–68.6)	226–250 (68.9–76.2)
18 1 Stage AC with R–410A	3/8	1/2	1	2	3	5	6	7	8	9	11
		5/8	0	1	1	1	2	2	2	3	3
		3/4	0	0	0	0	1	1	1	1	1
24 1 Stage AC with R–410A	3/8	5/8	0	1	2	2	3	3	4	5	5
		3/4	0	0	1	1	1	1	1	2	2
		7/8	0	0	0	0	0	1	1	1	1
30 1 Stage AC with R–410A	3/8	5/8	1	2	3	3	4	5	6	7	8
		3/4	0	0	1	1	1	2	2	2	3
		7/8	0	0	0	0	1	1	1	1	1
36 1 Stage AC with R–410A	3/8	5/8	1	2	4	5	6	8	9	10	12
		3/4	0	1	1	2	2	3	3	4	4
		7/8	0	0	0	1	1	1	1	2	2
42 1 Stage AC with R–410A	3/8	3/4	0	1	2	2	3	4	4	5	6
		7/8	0	0	1	1	1	2	2	2	3
		1 1/8	0	0	0	0	0	0	0	0	0
48 1 Stage AC with R–410A	3/8	3/4	0	1	2	3	4	5	5	6	7
		7/8	0	0	1	1	2	2	2	3	3
		1 1/8	0	0	0	0	0	0	0	1	1
60 1 Stage AC with R–410A	3/8	3/4	1	2	4	5	6	7	9	10	11
		7/8	0	1	2	2	3	4	4	5	5
		1 1/8	0	0	0	1	1	1	1	1	1

Consult the Long Line Application Guideline document before purchasing/installing line sets.

Applications in shaded area may have height restrictions that limit allowable total equivalent length when outdoor unit is below indoor unit.

Unit Size	Indoor Model	Furnace Model	AHRI Standard Ratings Cooling 95° F (35°C)					
			Capacity	Factory Enhance	SEER Standard	SEER W/ Field TDR	SEER W/ Field TXV	EER
TSA618GKA	*EN(A,D)4X19*17**		18000	TXV		14.5		12.0
TSA624GKA	*EN(A,D)4X31*17**		23800	TXV		14.5		12.0
TSA630GKA	*EN(A,D)4X31*17**		28400	TXV		14.5		12.0
TSA636GKA	*EN(A,D)4X37*17**		34400	TXV		14.5		12.0
TSA642GKA	*EN(A,D)4X43*24**		42000	TXV		14.5		12.0
TSA648GKA	*EN(A,D)4X61*24**		46500	TXV		14.5		12.5
TSA660GKB	*EN(A,D)4X61*24**		57500	TXV		15.0		12.5

† For coils not listed with a matching furnace or blower, coil rating applies with any indoor blower device.

TESTED AHRI COMBINATION RATINGS*

NOTE: Ratings contained in this document are subject to change at any time.

For AHRI ratings certificates, please refer to the AHRI directory. **www.ahridirectory.org**

Additional ratings and system combinations can be accessed via the Tempstar database:
http://www.icpeqp.com/AHRIratings/ratings.aspx?Brand=Tempstar

Or scan this QR code:

DETAILED COOLING CAPACITIES#

EVAPORATOR AIR		CONDENSER ENTERING AIR TEMPERATURES °F (°C)																	
		75 (23.9)			85 (29.4)			95 (35)			105 (40.6)			115 (46.1)			125 (51.7)		
CFM	EWB °F (°C)	Capacity MBtuh		Total Sys. KW**	Capacity MBtuh		Total Sys. KW**	Capacity MBtuh		Total Sys. KW**	Capacity MBtuh		Total Sys. KW**	Capacity MBtuh		Total Sys. KW**	Capacity MBtuh		Total Sys. KW**
		Total	Sens‡		Total	Sens‡		Total	Sens‡		Total	Sens‡		Total	Sens‡		Total	Sens‡	
*SA618GKA Outdoor Section With EN(A,D)4X19*17**+TDR Indoor Section																			
525	57 (13.9)	21.63	10.95	1.12	20.61	10.57	1.26	19.54	10.18	1.41	18.41	9.76	1.58	17.21	9.34	1.77	15.94	8.89	1.97
	62 (16.7)	19.55	13.28	1.12	18.63	12.90	1.26	17.65	12.51	1.41	16.62	12.09	1.57	15.53	11.66	1.75	14.37	11.21	1.96
	63 (17.2)††	18.05	12.76	1.12	17.20	12.38	1.26	16.30	11.98	1.40	15.33	11.57	1.56	14.31	11.14	1.75	13.23	10.68	1.96
	67 (19.4)	17.71	15.58	1.12	16.88	15.21	1.25	16.01	14.81	1.40	15.10	14.39	1.56	14.22	14.22	1.75	13.36	13.36	1.96
	72 (22.2)	17.06	17.06	1.12	16.42	16.42	1.25	15.73	15.73	1.40	14.99	14.99	1.56	14.20	14.20	1.75	13.33	13.33	1.96
600	57 (13.9)	22.11	11.53	1.14	21.03	11.14	1.29	19.90	10.74	1.44	18.72	10.32	1.61	17.48	9.88	1.79	16.16	9.43	2.00
	62 (16.7)	19.99	14.19	1.14	19.02	13.81	1.28	18.00	13.40	1.43	16.92	12.98	1.60	15.79	12.54	1.78	14.58	12.08	1.99
	63 (17.2)††	18.48	13.61	1.14	17.58	13.22	1.28	16.63	12.82	1.43	15.63	12.39	1.59	14.56	11.95	1.78	13.44	11.49	1.98
	67 (19.4)	18.18	16.82	1.14	17.33	16.42	1.28	16.46	16.46	1.43	15.67	15.67	1.59	14.81	14.81	1.78	13.88	13.88	1.99
	72 (22.2)	17.88	17.88	1.14	17.18	17.18	1.28	16.44	16.44	1.43	15.64	15.64	1.59	14.79	14.79	1.78	13.86	13.86	1.99
675	57 (13.9)	22.46	12.08	1.17	21.34	11.68	1.32	20.17	11.27	1.47	18.95	10.85	1.64	17.66	10.41	1.82	16.31	9.95	2.03
	62 (16.7)	20.34	15.07	1.17	19.32	14.67	1.31	18.26	14.26	1.46	17.15	13.83	1.63	15.98	13.38	1.81	14.75	12.91	2.02
	63 (17.2)††	18.80	14.42	1.17	17.86	14.03	1.31	16.88	13.62	1.46	15.84	13.18	1.62	14.75	12.73	1.80	13.60	12.25	2.01
	67 (19.4)	18.61	18.52	1.17	17.85	17.85	1.31	17.05	17.05	1.46	16.21	16.21	1.62	15.30	15.30	1.80	14.32	14.32	2.01
	72 (22.2)	18.57	18.57	1.17	17.82	17.82	1.31	17.03	17.03	1.46	16.18	16.18	1.62	15.27	15.27	1.80	14.30	14.30	2.01

EVAPORATOR AIR		CONDENSER ENTERING AIR TEMPERATURES °F (°C)																	
		75 (23.9)			85 (29.4)			95 (35)			105 (40.6)			115 (46.1)			125 (51.7)		
CFM	EWB °F (°C)	Capacity MBtuh		Total Sys. KW**	Capacity MBtuh		Total Sys. KW**	Capacity MBtuh		Total Sys. KW**	Capacity MBtuh		Total Sys. KW**	Capacity MBtuh		Total Sys. KW**	Capacity MBtuh		Total Sys. KW**
		Total	Sens‡		Total	Sens‡		Total	Sens‡		Total	Sens‡		Total	Sens‡		Total	Sens‡	
*SA624GKA Outdoor Section With EN(A,D)4X31*17**+TDR Indoor Section																			
700	57 (13.9)	28.62	14.37	1.54	27.23	13.51	1.73	25.76	12.66	1.94	24.22	11.82	2.16	22.61	10.99	2.41	20.92	10.17	2.69
	62 (16.7)	26.01	17.59	1.54	24.72	16.64	1.73	23.39	15.71	1.93	21.99	14.77	2.15	20.51	13.85	2.40	18.97	12.93	2.68
	63 (17.2)††	24.07	16.91	1.55	22.89	15.98	1.73	21.64	15.06	1.92	20.33	14.14	2.14	18.96	13.23	2.39	17.51	12.32	2.67
	67 (19.4)	23.66	20.76	1.55	22.51	19.72	1.73	21.32	18.69	1.92	20.11	20.07	2.14	18.99	18.99	2.39	17.81	17.81	2.67
	72 (22.2)	23.01	23.01	1.55	22.09	22.09	1.73	21.11	21.11	1.92	20.07	20.07	2.14	18.96	18.96	2.39	17.78	17.78	2.67
800	57 (13.9)	29.14	15.12	1.58	27.70	14.25	1.77	26.17	13.37	1.98	24.57	12.50	2.20	22.90	11.64	2.45	21.16	10.79	2.73
	62 (16.7)	26.54	18.82	1.58	25.20	17.83	1.77	23.80	16.84	1.97	22.34	15.87	2.19	20.81	14.90	2.43	19.21	13.94	2.72
	63 (17.2)††	24.59	18.05	1.58	23.34	17.08	1.76	22.05	16.12	1.96	20.69	15.16	2.18	19.26	14.21	2.43	17.77	13.26	2.71
	67 (19.4)	24.26	22.42	1.58	23.11	23.01	1.76	22.04	22.04	1.96	20.92	20.92	2.18	19.73	19.73	2.43	18.47	18.47	2.71
	72 (22.2)	24.05	24.05	1.58	23.05	23.05	1.76	22.00	22.00	1.96	20.89	20.89	2.18	19.71	19.71	2.43	18.45	18.45	2.71
900	57 (13.9)	29.51	15.85	1.62	28.04	14.95	1.81	26.46	14.05	2.02	24.81	13.15	2.24	23.10	12.27	2.49	21.31	11.39	2.77
	62 (16.7)	26.93	20.00	1.62	25.54	18.97	1.80	24.10	17.94	2.01	22.60	16.92	2.23	21.03	15.91	2.47	19.40	14.90	2.75
	63 (17.2)††	24.97	19.15	1.62	23.69	18.14	1.80	22.35	17.14	2.00	20.95	16.14	2.22	19.49	15.15	2.47	17.97	14.15	2.75
	67 (19.4)	24.96	24.96	1.62	23.89	23.89	1.80	22.77	22.77	2.00	21.59	21.59	2.22	20.34	20.34	2.47	19.00	19.00	2.75
	72 (22.2)	24.92	24.92	1.62	23.86	23.86	1.80	22.74	22.74	2.00	21.56	21.56	2.22	20.31	20.31	2.47	18.98	18.98	2.75

See notes on pg. 10

DETAILED COOLING CAPACITIES# CONTINUED

EVAPORATOR AIR		CONDENSER ENTERING AIR TEMPERATURES °F (°C)																	
		75 (23.9)			85 (29.4)			95 (35)			105 (40.6)			115 (46.1)			125 (51.7)		
CFM	EWB °F (°C)	Capacity MBtuh		Total Sys. KW**	Capacity MBtuh		Total Sys. KW**	Capacity MBtuh		Total Sys. KW**	Capacity MBtuh		Total Sys. KW**	Capacity MBtuh		Total Sys. KW**	Capacity MBtuh		Total Sys. KW**
		Total	Sens‡		Total	Sens‡		Total	Sens‡		Total	Sens‡		Total	Sens‡		Total	Sens‡	
*SA330GKA Outdoor Section With EN(A,D)4X31*17**+TDR Indoor Section																			
900	57 (13.9)	34.12	17.11	1.85	32.53	16.70	2.08	30.88	16.26	2.34	29.15	15.80	2.64	27.28	15.28	2.99	25.26	14.70	3.40
	62 (16.7)	31.02	21.15	1.86	29.57	20.76	2.09	28.06	20.35	2.35	26.46	19.90	2.65	24.74	19.40	3.00	22.87	18.83	3.40
	63 (17.2)††	28.79	20.32	1.87	27.44	19.93	2.09	26.03	19.51	2.35	24.52	19.04	2.65	22.89	18.52	3.00	21.12	17.93	3.40
	67 (19.4)	28.37	25.13	1.87	27.08	24.75	2.09	25.78	25.70	2.35	24.55	24.55	2.65	23.21	23.21	3.00	21.75	21.75	3.40
	72 (22.2)	27.93	27.93	1.87	26.86	26.86	2.09	25.73	25.73	2.35	24.51	24.51	2.65	23.18	23.18	3.00	21.72	21.72	3.40
1000	57 (13.9)	34.56	17.82	1.89	32.92	17.41	2.11	31.23	16.97	2.38	29.45	16.51	2.68	27.53	15.99	3.03	25.46	15.41	3.44
	62 (16.7)	31.45	22.30	1.90	29.95	21.91	2.12	28.40	21.50	2.38	26.76	21.05	2.68	25.00	20.54	3.03	23.09	19.97	3.44
	63 (17.2)††	29.21	21.39	1.90	27.81	21.00	2.13	26.36	20.57	2.39	24.81	20.10	2.69	23.15	19.58	3.04	21.35	18.98	3.44
	67 (19.4)	28.93	28.68	1.90	27.74	27.74	2.13	26.55	26.55	2.39	25.27	25.27	2.69	23.88	23.88	3.03	22.35	22.35	3.44
	72 (22.2)	28.84	28.84	1.90	27.70	27.70	2.13	26.52	26.52	2.39	25.23	25.23	2.69	23.85	23.85	3.03	22.32	22.32	3.44
1125	57 (13.9)	34.98	18.68	1.93	33.28	18.26	2.16	31.54	17.83	2.42	29.70	17.36	2.73	27.74	16.84	3.08	25.63	16.26	3.49
	62 (16.7)	31.86	23.68	1.94	30.31	23.29	2.17	28.73	22.88	2.43	27.04	22.43	2.73	25.25	21.91	3.08	23.32	21.32	3.49
	63 (17.2)††	29.61	22.67	1.94	28.18	22.28	2.17	26.68	21.85	2.43	25.10	21.38	2.73	23.41	20.84	3.08	21.59	20.22	3.49
	67 (19.4)	29.84	29.84	1.94	28.63	28.63	2.17	27.38	27.38	2.43	26.02	26.02	2.73	24.56	24.56	3.08	22.96	22.96	3.49
	72 (22.2)	29.80	29.80	1.94	28.59	28.59	2.17	27.34	27.34	2.43	25.99	25.99	2.73	24.53	24.53	3.08	22.93	22.93	3.49

EVAPORATOR AIR		CONDENSER ENTERING AIR TEMPERATURES °F (°C)																	
		75 (23.9)			85 (29.4)			95 (35)			105 (40.6)			115 (46.1)			125 (51.7)		
CFM	EWB °F (°C)	Capacity MBtuh		Total Sys. KW**	Capacity MBtuh		Total Sys. KW**	Capacity MBtuh		Total Sys. KW**	Capacity MBtuh		Total Sys. KW**	Capacity MBtuh		Total Sys. KW**	Capacity MBtuh		Total Sys. KW**
		Total	Sens‡		Total	Sens‡		Total	Sens‡		Total	Sens‡		Total	Sens‡		Total	Sens‡	
*SA636GKA Outdoor Section With EN(A,D)4X37*17**+TDR Indoor Section																			
1050	57 (13.9)	41.79	21.33	2.30	39.58	20.21	2.55	37.29	19.10	2.83	34.92	17.98	3.14	32.46	16.86	3.51	29.88	15.74	3.93
	62 (16.7)	37.98	26.27	2.28	35.95	25.04	2.53	33.86	23.81	2.81	31.68	22.58	3.12	29.42	21.34	3.49	27.06	20.10	3.92
	63 (17.2)††	35.23	25.25	2.27	33.34	24.04	2.52	31.38	22.83	2.79	29.34	21.61	3.11	27.22	20.39	3.48	25.00	19.15	3.91
	67 (19.4)	34.66	31.16	2.26	32.83	29.80	2.51	30.98	28.42	2.79	29.22	29.22	3.11	27.47	27.47	3.48	25.61	25.61	3.91
	72 (22.2)	33.97	33.97	2.26	32.44	32.44	2.51	30.85	30.85	2.79	29.18	29.18	3.11	27.42	27.42	3.48	25.57	25.57	3.91
1200	57 (13.9)	42.51	22.47	2.36	40.20	21.32	2.61	37.84	20.17	2.89	35.39	19.02	3.20	32.84	17.87	3.57	30.20	16.71	3.99
	62 (16.7)	38.68	28.11	2.34	36.57	26.83	2.59	34.40	25.54	2.87	32.16	24.26	3.18	29.82	22.96	3.55	27.40	21.67	3.97
	63 (17.2)††	35.91	26.96	2.33	33.94	25.70	2.58	31.91	24.44	2.85	29.80	23.17	3.17	27.61	21.89	3.54	25.35	20.60	3.97
	67 (19.4)	35.54	35.26	2.32	33.84	33.84	2.58	32.14	32.14	2.85	30.35	30.35	3.17	28.49	28.49	3.54	26.52	26.52	3.97
	72 (22.2)	35.43	35.43	2.32	33.79	33.79	2.58	32.09	32.09	2.85	30.31	30.31	3.17	28.45	28.45	3.54	26.48	26.48	3.97
1350	57 (13.9)	43.03	23.57	2.42	40.66	22.38	2.67	38.23	21.20	2.95	35.70	20.02	3.26	33.10	18.84	3.63	30.39	17.65	4.04
	62 (16.7)	39.19	29.87	2.40	37.03	28.54	2.65	34.81	27.21	2.93	32.50	25.87	3.24	30.12	24.52	3.61	27.67	23.16	4.03
	63 (17.2)††	36.41	28.60	2.39	34.39	27.29	2.64	32.31	25.98	2.91	30.15	24.66	3.23	27.92	23.33	3.60	25.62	21.97	4.03
	67 (19.4)	36.68	36.68	2.39	34.95	34.95	2.64	33.16	33.16	2.92	31.28	31.28	3.24	29.32	29.32	3.60	27.25	27.25	4.03
	72 (22.2)	36.63	36.63	2.39	34.90	34.90	2.64	33.11	33.11	2.92	31.23	31.23	3.24	29.28	29.28	3.60	27.21	27.21	4.03

See notes on pg. 10

DETAILED COOLING CAPACITIES# CONTINUED

EVAPORATOR AIR		CONDENSER ENTERING AIR TEMPERATURES °F (°C)																	
		75 (23.9)			85 (29.4)			95 (35)			105 (40.6)			115 (46.1)			125 (51.7)		
CFM	EWB °F (°C)	Capacity MBtuh		Total Sys. KW**	Capacity MBtuh		Total Sys. KW**	Capacity MBtuh		Total Sys. KW**	Capacity MBtuh		Total Sys. KW**	Capacity MBtuh		Total Sys. KW**	Capacity MBtuh		Total Sys. KW**
		Total	Sens‡		Total	Sens‡		Total	Sens‡		Total	Sens‡		Total	Sens‡		Total	Sens‡	
*SA642GKA Outdoor Section With EN(A,D)4X43*24**+TDR Indoor Section																			
1225	57 (13.9)	49.34	24.70	2.66	47.47	24.08	3.01	45.41	23.40	3.42	43.15	22.67	3.88	40.71	21.89	4.39	38.06	21.06	4.98
	62 (16.7)	44.95	30.44	2.64	43.25	29.86	2.99	41.39	29.23	3.38	39.33	28.54	3.84	37.11	27.79	4.36	34.71	26.99	4.94
	63 (17.2)††	41.76	29.29	2.63	40.20	28.71	2.97	38.47	28.07	3.36	36.56	27.37	3.82	34.50	26.62	4.33	32.25	25.80	4.91
	67 (19.4)	41.12	36.11	2.63	39.63	35.56	2.97	38.01	34.93	3.36	36.38	36.38	3.82	34.75	34.75	4.33	32.94	32.94	4.92
	72 (22.2)	40.25	40.25	2.62	39.10	39.10	2.96	37.79	37.79	3.36	36.33	36.33	3.82	34.70	34.70	4.33	32.90	32.90	4.92
1400	57 (13.9)	50.16	25.99	2.73	48.18	25.36	3.08	46.03	24.68	3.49	43.68	23.95	3.95	41.13	23.16	4.47	38.39	22.32	5.06
	62 (16.7)	45.74	32.51	2.71	43.96	31.94	3.06	42.00	31.30	3.46	39.87	30.61	3.92	37.56	29.85	4.43	35.08	29.04	5.02
	63 (17.2)††	42.55	31.23	2.70	40.90	30.64	3.04	39.08	30.00	3.44	37.10	29.29	3.89	34.95	28.52	4.41	32.65	27.69	4.99
	67 (19.4)	42.11	38.86	2.70	40.72	40.72	3.04	39.30	39.30	3.44	37.71	37.71	3.90	35.95	35.95	4.42	34.01	34.01	5.01
	72 (22.2)	41.92	41.92	2.70	40.66	40.66	3.04	39.24	39.24	3.44	37.65	37.65	3.90	35.90	35.90	4.42	33.97	33.97	5.01
1575	57 (13.9)	50.74	27.21	2.80	48.70	26.58	3.16	46.46	25.90	3.56	44.03	25.16	4.03	41.41	24.38	4.55	38.60	23.54	5.14
	62 (16.7)	46.32	34.50	2.78	44.48	33.92	3.13	42.46	33.29	3.53	40.26	32.59	3.99	37.89	31.82	4.51	35.38	30.98	5.10
	63 (17.2)††	43.12	33.07	2.77	41.42	32.49	3.11	39.54	31.84	3.51	37.50	31.12	3.97	35.30	30.34	4.48	32.96	29.47	5.07
	67 (19.4)	43.35	43.35	2.77	42.00	42.00	3.11	40.47	40.47	3.52	38.78	38.78	3.98	36.91	36.91	4.50	34.86	34.86	5.09
	72 (22.2)	43.29	43.29	2.77	41.94	41.94	3.11	40.42	40.42	3.52	38.73	38.73	3.98	36.87	36.87	4.50	34.82	34.82	5.09

EVAPORATOR AIR		CONDENSER ENTERING AIR TEMPERATURES °F (°C)																	
		75 (23.9)			85 (29.4)			95 (35)			105 (40.6)			115 (46.1)			125 (51.7)		
CFM	EWB °F (°C)	Capacity MBtuh		Total Sys. KW**	Capacity MBtuh		Total Sys. KW**	Capacity MBtuh		Total Sys. KW**	Capacity MBtuh		Total Sys. KW**	Capacity MBtuh		Total Sys. KW**	Capacity MBtuh		Total Sys. KW**
		Total	Sens‡		Total	Sens‡		Total	Sens‡		Total	Sens‡		Total	Sens‡		Total	Sens‡	
*SA648GKA Outdoor Section With EN(A,D)4X61*24**+TDR Indoor Section																			
1400	57 (13.9)	56.26	27.99	2.63	53.43	27.01	3.06	50.50	26.01	3.49	47.48	24.98	3.94	44.30	23.92	4.41	40.93	22.81	4.90
	62 (16.7)	50.89	34.43	2.79	48.38	33.47	3.18	45.78	32.48	3.58	43.08	31.47	4.00	40.25	30.42	4.44	37.23	29.31	4.92
	63 (17.2)††	47.07	33.02	2.89	44.78	32.08	3.26	42.40	31.11	3.64	39.93	30.12	4.03	37.32	29.07	4.46	34.55	27.98	4.92
	67 (19.4)	46.35	40.80	2.90	44.17	39.83	3.27	41.98	41.83	3.64	39.98	39.98	4.03	37.84	37.84	4.45	35.52	35.52	4.92
	72 (22.2)	45.55	45.55	2.92	43.76	43.76	3.27	41.89	41.89	3.64	39.91	39.91	4.03	37.78	37.78	4.45	35.47	35.47	4.92
1600	57 (13.9)	57.28	29.51	2.66	54.30	28.50	3.10	51.24	27.48	3.54	48.08	26.43	4.00	44.78	25.35	4.47	41.29	24.22	4.97
	62 (16.7)	51.86	36.85	2.83	49.21	35.85	3.23	46.50	34.85	3.64	43.69	33.81	4.06	40.75	32.72	4.51	37.65	31.58	4.99
	63 (17.2)††	47.99	35.27	2.94	45.57	34.29	3.31	43.10	33.30	3.70	40.52	32.28	4.10	37.82	31.20	4.53	34.97	30.07	5.00
	67 (19.4)	47.61	47.41	2.94	45.63	45.63	3.31	43.61	43.61	3.69	41.47	41.47	4.09	39.16	39.16	4.52	36.67	36.67	5.00
	72 (22.2)	47.50	47.50	2.94	45.56	45.56	3.31	43.54	43.54	3.69	41.41	41.41	4.09	39.11	39.11	4.52	36.63	36.63	5.00
1800	57 (13.9)	58.02	30.95	2.70	54.93	29.93	3.15	51.76	28.88	3.60	48.49	27.82	4.06	45.10	26.72	4.54	41.51	25.58	5.05
	62 (16.7)	52.58	39.16	2.87	49.84	38.15	3.28	47.04	37.11	3.70	44.14	36.04	4.13	41.13	34.92	4.58	37.98	33.72	5.07
	63 (17.2)††	48.67	37.42	2.99	46.18	36.42	3.37	43.62	35.40	3.76	40.96	34.34	4.17	38.21	33.22	4.60	35.32	31.99	5.08
	67 (19.4)	49.21	49.21	2.96	47.13	47.13	3.35	44.96	44.96	3.74	42.67	42.67	4.15	40.23	40.23	4.59	37.59	37.59	5.07
	72 (22.2)	49.14	49.14	2.97	47.06	47.06	3.35	44.90	44.90	3.74	42.61	42.61	4.15	40.18	40.18	4.59	37.55	37.55	5.07

See notes on pg. 10

DETAILED COOLING CAPACITIES# CONTINUED

EVAPORATOR AIR		CONDENSER ENTERING AIR TEMPERATURES °F (°C)																	
		75 (23.9)			85 (29.4)			95 (35)			105 (40.6)			115 (46.1)			125 (51.7)		
CFM	EWB °F (°C)	Capacity MBtuh		Total Sys. KW**	Capacity MBtuh		Total Sys. KW**	Capacity MBtuh		Total Sys. KW**	Capacity MBtuh		Total Sys. KW**	Capacity MBtuh		Total Sys. KW**	Capacity MBtuh		Total Sys. KW**
		Total	Sens‡		Total	Sens‡		Total	Sens‡		Total	Sens‡		Total	Sens‡		Total	Sens‡	
SA660GKB Outdoor Section With EN(A,D)4X61*24** Indoor Section																			
1600	72 (22.2)	67.41	34.75	3.24	63.92	33.45	3.71	60.21	32.09	4.25	56.21	30.64	4.87	51.85	29.08	5.58	47.29	27.48	6.39
	67 (19.4)	61.41	42.78	3.23	58.31	41.51	3.69	55.00	40.18	4.23	51.44	38.76	4.85	47.09	37.03	5.55	43.40	35.59	6.38
	63 (17.2)††	57.06	41.22	3.21	54.24	39.98	3.68	51.22	38.66	4.22	47.58	37.09	4.83	44.36	35.73	5.55	40.59	34.13	6.37
	62 (16.7)	56.01	50.59	3.21	53.30	49.32	3.68	50.38	47.94	4.22	47.07	46.25	4.83	44.15	44.15	5.55	41.01	41.01	6.38
	57 (13.9)	54.03	54.03	3.20	51.89	51.89	3.67	49.54	49.54	4.21	46.96	46.96	4.84	44.10	44.10	5.55	40.97	40.97	6.38
1750	72 (22.2)	68.27	35.89	3.27	64.69	34.58	3.74	60.82	33.17	4.28	56.74	31.73	4.90	52.25	30.15	5.61	47.62	28.54	6.43
	67 (19.4)	62.25	44.63	3.26	59.04	43.34	3.73	55.63	41.99	4.27	51.94	40.54	4.89	47.24	38.68	5.59	43.73	37.32	6.42
	63 (17.2)††	57.89	42.95	3.25	54.95	41.68	3.72	51.83	40.35	4.25	48.43	38.90	4.88	44.79	37.36	5.59	40.91	35.72	6.41
	62 (16.7)	56.91	53.05	3.24	54.11	51.71	3.71	51.17	50.18	4.25	48.17	48.17	4.88	45.13	45.13	5.59	41.87	41.87	6.42
	57 (13.9)	55.57	55.57	3.24	53.30	53.30	3.71	50.83	50.83	4.25	48.05	48.05	4.87	45.10	45.10	5.59	41.82	41.82	6.42
2000	72 (22.2)	69.42	37.71	3.33	65.65	36.37	3.80	61.66	34.96	4.34	57.41	33.51	4.96	52.76	31.87	5.68	48.01	30.25	6.49
	67 (19.4)	63.34	47.60	3.32	59.99	46.28	3.79	56.42	44.88	4.33	52.60	43.39	4.95	48.44	41.76	5.66	44.15	40.05	6.49
	63 (17.2)††	58.94	45.70	3.30	55.88	44.41	3.77	52.62	43.03	4.31	49.13	41.55	4.94	45.33	39.94	5.65	41.36	38.22	6.48
	62 (16.7)	58.21	56.77	3.30	55.41	55.41	3.77	52.72	52.72	4.32	49.80	49.80	4.94	46.54	46.54	5.66	43.04	43.04	6.48
	57 (13.9)	57.76	57.76	3.30	55.32	55.32	3.77	52.66	52.66	4.32	49.72	49.72	4.94	46.48	46.48	5.66	43.00	43.00	6.48

† Total and sensible capacities are net capacities. Blower motor heat has been subtracted.
‡ Sensible capacities shown are based on 80°F (27°C) entering air at the indoor coil. For sensible capacities at other than 80°F (27°C), deduct 835 Btuh (245 kW) per 1000 CFM (480 L/S) of indoor coil air for each degree below 80°F (27°C), or add 835 Btuh (245 kW) per 1000 CFM (480 L/S) of indoor coil air per degree above 80°F (27°C).
# Detailed cooling capacities are based on indoor and outdoor unit at the same elevation per AHRI standard 210/240−2008. If additional tubing length and/or indoor unit is located above outdoor unit, a slight variation in capacity may occur.
** System kw is total of indoor and outdoor unit kilowatts.
†† At TVA rating indoor condition (75°F edb/63°F ewb). All other indoor air temperatures are at 80°F edb.
NOTE: When the required data falls between the published data, interpolation may be performed. Extrapolation is not an acceptable practice.
EWB — Entering Wet Bulb

CONDENSER ONLY RATINGS*

SST °F (°C)		CONDENSER ENTERING AIR TEMPERATURES °F (°C)							
		55 (12.78)	65 (18.33)	75 (23.89)	85 (29.44)	95 (35.0)	105 (40.56)	115 (46.11)	125 (51.67)
*SA618GKA									
30 (−1.11)	TCG	14.00	13.50	13.00	12.40	11.80	11.00	10.20	9.30
	SDT	65.20	74.80	84.40	94.00	103.60	113.10	122.60	132.00
	KW	0.66	0.78	0.91	1.04	1.20	1.37	1.58	1.83
35 (1.67)	TCG	15.60	15.00	14.50	13.80	13.10	12.30	11.40	10.40
	SDT	66.30	75.90	85.40	94.90	104.40	113.80	123.20	132.70
	KW	0.65	0.77	0.90	1.04	1.20	1.38	1.58	1.83
40 (4.44)	TCG	17.30	16.70	16.10	15.30	14.60	13.70	12.70	11.70
	SDT	67.50	76.90	86.40	95.80	105.20	114.60	124.00	133.30
	KW	0.64	0.77	0.90	1.05	1.20	1.38	1.59	1.83
45 (7.22)	TCG	19.10	18.50	17.70	17.00	16.10	15.20	14.20	13.00
	SDT	68.70	78.00	87.40	96.70	106.10	115.40	124.80	134.10
	KW	0.63	0.77	0.90	1.05	1.21	1.39	1.59	1.83
50 (10.0)	TCG	21.10	20.30	19.50	18.70	17.80	16.70	15.70	14.50
	SDT	69.90	79.20	88.40	97.70	107.00	116.30	125.60	134.80
	KW	0.63	0.76	0.90	1.05	1.21	1.39	1.60	1.84
55 (12.78)	TCG	23.10	22.30	21.50	20.50	19.50	18.40	17.20	15.90
	SDT	71.20	80.40	89.60	98.80	108.00	117.20	126.50	135.60
	KW	0.62	0.76	0.91	1.06	1.22	1.40	1.61	1.85
*SA624GKA									
30 (−1.11)	TCG	20.10	19.40	18.50	17.60	16.70	15.60	14.40	13.10
	SDT	66.10	75.80	85.30	94.90	104.40	114.00	123.40	132.80
	KW	0.97	1.13	1.29	1.46	1.65	1.87	2.13	2.42
35 (1.67)	TCG	22.30	21.40	20.50	19.50	18.50	17.30	16.00	14.70
	SDT	67.20	76.80	86.30	95.80	105.30	114.70	124.10	133.50
	KW	0.96	1.12	1.29	1.46	1.66	1.87	2.13	2.42
40 (4.44)	TCG	24.60	23.70	22.70	21.60	20.40	19.10	17.80	16.30
	SDT	68.40	77.90	87.30	96.70	106.10	115.50	124.80	134.10
	KW	0.95	1.12	1.29	1.46	1.66	1.88	2.13	2.42
45 (7.22)	TCG	27.10	26.00	24.90	23.70	22.40	21.10	19.60	18.00
	SDT	69.60	79.00	88.30	97.60	107.00	116.30	125.60	134.90
	KW	0.94	1.11	1.29	1.47	1.67	1.89	2.14	2.43
50 (10.0)	TCG	29.70	28.60	27.30	26.00	24.60	23.10	21.50	19.80
	SDT	70.80	80.10	89.40	98.70	107.90	117.20	126.40	135.60
	KW	0.93	1.11	1.29	1.47	1.67	1.90	2.15	2.43
55 (12.78)	TCG	32.50	31.20	29.90	28.40	26.90	25.30	23.50	21.70
	SDT	72.10	81.30	90.50	99.70	108.90	118.10	127.30	136.40
	KW	0.93	1.11	1.29	1.48	1.69	1.91	2.16	2.45
*SA30GKA									
30 (−1.11)	TCG	23.80	22.90	21.90	20.90	19.80	18.50	17.00	15.30
	SDT	68.10	77.50	87.00	96.40	105.80	115.10	124.40	133.60
	KW	1.14	1.32	1.52	1.74	1.99	2.29	2.63	3.02
35 (1.67)	TCG	26.30	25.30	24.30	23.10	21.90	20.50	19.00	17.20
	SDT	69.40	78.70	88.10	97.40	106.70	116.00	125.30	134.40
	KW	1.15	1.33	1.52	1.75	2.00	2.30	2.64	3.03
40 (4.44)	TCG	29.00	27.90	26.80	25.50	24.20	22.80	21.10	19.20
	SDT	70.70	79.90	89.20	98.50	107.70	117.00	126.20	135.30
	KW	1.16	1.33	1.53	1.75	2.01	2.31	2.65	3.05
45 (7.22)	TCG	31.90	30.70	29.40	28.10	26.70	25.10	23.40	21.40
	SDT	72.00	81.20	90.40	99.60	108.80	118.00	127.20	136.30
	KW	1.16	1.33	1.53	1.76	2.01	2.31	2.66	3.06
50 (10.0)	TCG	35.00	33.60	32.30	30.80	29.30	27.60	25.70	23.60
	SDT	73.50	82.50	91.60	100.80	110.00	119.20	128.20	137.20
	KW	1.16	1.33	1.53	1.76	2.02	2.32	2.67	3.07
55 (12.78)	TCG	38.30	36.80	35.30	33.70	32.00	30.20	28.20	26.00
	SDT	75.00	84.00	93.00	102.10	111.20	120.30	129.30	138.20
	KW	1.15	1.33	1.53	1.76	2.02	2.32	2.67	3.08

See notes on pg. 13

Specifications subject to change without notice.

CONDENSER ONLY RATINGS* CONTINUED

SST °F (°C)		CONDENSER ENTERING AIR TEMPERATURES °F (°C)							
		55 (12.78)	65 (18.33)	75 (23.89)	85 (29.44)	95 (35.0)	105 (40.56)	115 (46.11)	125 (51.67)
*SA636GKA									
30 (−1.11)	TCG	30.50	29.20	27.80	26.30	24.70	23.00	21.20	19.20
	SDT	69.50	78.70	87.90	97.20	106.60	115.90	125.20	134.50
	KW	1.41	1.62	1.85	2.10	2.37	2.69	3.07	3.51
35 (1.67)	TCG	33.70	32.20	30.70	29.10	27.40	25.50	23.60	21.50
	SDT	70.70	79.90	89.10	98.30	107.50	116.80	126.10	135.40
	KW	1.41	1.63	1.86	2.11	2.38	2.70	3.07	3.51
40 (4.44)	TCG	37.10	35.50	33.80	32.10	30.20	28.20	26.10	23.90
	SDT	72.10	81.20	90.30	99.50	108.60	117.80	127.10	136.30
	KW	1.42	1.64	1.87	2.12	2.40	2.71	3.08	3.52
45 (7.22)	TCG	40.80	39.00	37.20	35.30	33.20	31.10	28.80	26.40
	SDT	73.70	82.60	91.60	100.70	109.80	118.90	128.10	137.20
	KW	1.43	1.65	1.88	2.13	2.41	2.73	3.10	3.53
50 (10.0)	TCG	44.80	42.80	40.80	38.70	36.50	34.10	31.70	29.00
	SDT	75.30	84.10	93.10	102.00	111.00	120.10	129.10	138.10
	KW	1.45	1.67	1.90	2.15	2.43	2.75	3.12	3.54
55 (12.78)	TCG	48.90	46.80	44.60	42.30	39.90	37.40	34.70	31.80
	SDT	77.00	85.70	94.60	103.40	112.30	121.30	130.20	139.10
	KW	1.47	1.70	1.93	2.18	2.46	2.77	3.14	3.56
*SA642GKA									
30 (−1.11)	TCG	33.00	32.30	31.40	30.30	28.90	27.40	25.60	23.70
	SDT	69.80	79.20	88.70	98.10	107.40	116.70	125.90	135.10
	KW	1.61	1.84	2.12	2.45	2.84	3.29	3.81	4.40
35 (1.67)	TCG	36.40	35.70	34.70	33.40	32.00	30.30	28.40	26.30
	SDT	71.20	80.60	89.90	99.20	108.40	117.70	126.80	136.00
	KW	1.62	1.86	2.14	2.47	2.86	3.31	3.83	4.42
40 (4.44)	TCG	40.10	39.30	38.20	36.80	35.20	33.40	31.40	29.10
	SDT	72.70	81.90	91.20	100.40	109.60	118.70	127.80	136.90
	KW	1.63	1.87	2.15	2.49	2.88	3.33	3.85	4.45
45 (7.22)	TCG	44.10	43.10	41.90	40.40	38.60	36.70	34.50	32.00
	SDT	74.20	83.30	92.50	101.60	110.80	119.90	128.90	137.90
	KW	1.64	1.88	2.17	2.51	2.91	3.36	3.88	4.48
50 (10.0)	TCG	48.30	47.20	45.80	44.20	42.30	40.10	37.70	35.00
	SDT	75.80	84.80	93.90	103.00	112.00	121.00	130.00	138.90
	KW	1.65	1.90	2.19	2.54	2.94	3.39	3.92	4.51
55 (12.78)	TCG	52.80	51.50	50.00	48.10	46.00	43.70	41.10	38.20
	SDT	77.40	86.40	95.40	104.40	113.40	122.30	131.20	140.00
	KW	1.67	1.92	2.22	2.57	2.97	3.43	3.96	4.55
*SA648GKA									
30 (−1.11)	TCG	40.10	38.00	35.90	33.80	31.50	29.20	26.70	24.20
	SDT	67.60	77.00	86.40	95.80	105.10	114.50	123.80	133.10
	KW	1.97	2.26	2.54	2.83	3.13	3.46	3.84	4.29
35 (1.67)	TCG	44.40	42.00	39.70	37.30	34.80	32.30	29.60	26.80
	SDT	68.90	78.20	87.50	96.80	106.10	115.30	124.60	133.80
	KW	1.90	2.22	2.53	2.83	3.14	3.48	3.87	4.30
40 (4.44)	TCG	49.10	46.40	43.80	41.10	38.40	35.60	32.70	29.60
	SDT	70.30	79.40	88.60	97.80	107.00	116.30	125.40	134.60
	KW	1.80	2.15	2.49	2.81	3.14	3.50	3.89	4.32
45 (7.22)	TCG	54.20	51.20	48.20	45.20	42.20	39.20	36.00	32.60
	SDT	71.70	80.70	89.80	99.00	108.10	117.30	126.40	135.40
	KW	1.66	2.05	2.41	2.77	3.13	3.50	3.90	4.34
50 (10.0)	TCG	59.80	56.40	53.00	49.70	46.40	43.00	39.40	35.70
	SDT	73.20	82.10	91.20	100.20	109.30	118.30	127.30	136.30
	KW	1.47	1.90	2.31	2.70	3.09	3.48	3.90	4.35
55 (12.78)	TCG	65.80	62.00	58.30	54.50	50.80	47.00	43.10	39.00
	SDT	74.80	83.60	92.60	101.50	110.50	119.40	128.40	137.30
	KW	1.24	1.72	2.17	2.60	3.02	3.44	3.88	4.35

See notes on pg. 13

CONDENSER ONLY RATINGS* CONTINUED

SST °F (°C)		CONDENSER ENTERING AIR TEMPERATURES °F (°C)							
		55 (12.78)	65 (18.33)	75 (23.89)	85 (29.44)	95 (35.0)	105 (40.56)	115 (46.11)	125 (51.67)
*SA660GKB									
30 (–1.1)	TCG	52.20	49.60	47.00	44.30	41.50	38.60	35.40	32.10
	SDT	70.60	80.00	89.60	99.20	108.80	118.50	128.20	137.80
	KW	2.68	3.02	3.39	3.81	4.29	4.84	5.48	6.20
35 (1.7)	TCG	57.50	54.70	51.80	49.00	45.90	42.70	39.30	35.80
	SDT	71.90	81.30	90.90	100.30	109.90	119.50	129.20	138.80
	KW	2.71	3.04	3.42	3.84	4.32	4.87	5.52	6.24
40 (4.4)	TCG	63.20	60.10	57.00	53.90	50.60	47.10	43.50	39.70
	SDT	73.40	82.70	92.10	101.60	111.20	120.70	130.20	139.80
	KW	2.74	3.07	3.44	3.87	4.36	4.92	5.55	6.28
45 (7.2)	TCG	69.40	66.00	62.60	59.20	55.60	51.90	47.90	43.90
	SDT	75.00	84.10	93.50	102.90	112.40	121.80	131.40	140.90
	KW	2.76	3.09	3.47	3.90	4.39	4.95	5.61	6.33
50 (10)	TCG	75.90	72.30	68.50	64.80	60.90	56.90	52.70	48.30
	SDT	76.60	85.70	95.10	104.40	113.70	123.10	132.60	141.90
	KW	2.78	3.12	3.50	3.93	4.42	4.99	5.65	6.38
55 (12.8)	TCG	82.90	79.00	75.00	70.90	66.70	62.30	57.80	53.10
	SDT	78.40	87.30	96.40	105.70	115.10	124.40	133.70	143.00
	KW	2.80	3.15	3.52	3.96	4.46	5.02	5.68	6.42

* AHRI listing applies only to systems shown in Combination Ratings table.

KW – Outdoor Unit Kilowatts Only.

SDT – Saturated Temperature Leaving Compressor (°F/°C)

SST – Saturated Temperature Entering Compressor (°F)

TCG – Gross Cooling Capacity (1000 Btuh)

ACCESSORY USAGE GUIDELINES

ACCESSORY	REQUIRED FOR LOW–AMBIENT COOLING APPLICATIONS (Below 55°F / 12.8°C)‡	REQUIRED FOR LONG LINE APPLICATIONS*
Compressor Start Assist Capacitor and Relay	Yes	Yes
Crankcase Heater	Yes	Yes
Evaporator Freeze Thermostat	Yes	No
Low–ambient Pressure Switch+	Yes	No
Support Feet	Recommended	No
Thermal Expansion Valve (TXV) Hard Shutoff	Yes	Yes†
Winter Start Control	Yes	No

‡ Non–communicating thermostat required.

* Refer to the Long Line Application Guideline document

+ If unit equipped with ECM OD motor, both motor and fan need to be replaced per unit accessory guide to work properly. Unit will not meet AHRI rated efficiency once motor and fan are replaced to use this accessory.

† TXV required beyond 20 ft. (6.1 m) vertical separation or 50 ft. (15.2 m) total length.

ACCESSORIES

Part Number	Description	Used On Model Size
NASA003CH	Crankcase Heater for Scroll Compressor (208/230 V)	18, 24, 30, 36
NASA001CH	Crankcase Heater for Scroll Compressor (208/230 V)	42, 48, 60*
NASA001SC	Start Component – PTC Device	ALL
NASA00201FS	Evaporator Freeze Thermostat	ALL
NASA401LS	Liquid Line Solenoid Valve, R–410A	ALL
NASA001TD	Time Delay Relay, Indoor Blower	ALL
NASA00201WS	Winter Start Control	ALL
NASA001AC	Anti–Cycle Timer (5 minute delay)	ALL
NASA014SC	Hard Start Kit (Capacitor & Relay)	18 – 48
NASA012SC	Hard Start Kit (Capacitor & Relay)	60
NASA401LA	Low Ambient Kit (Pressure Switch), R–410A	ALL
NASA00201SF	Support Feet, 4” (102mm) tall	ALL
NAEA40501TX	TXV Kit, R–410A – for use with copper or tin fan coils	18, 24, 30
NAEA40601TX	TXV Kit, R–410A – for use with copper or tin fan coils	36, 42
NAEA40701TX	TXV Kit, R–410A – for use with copper or tin fan coils	48, 60
NAEB40501TX	TXV Kit, R–410A – for use with aluminum fan coils	18, 24, 30
NAEB40601TX	TXV Kit, R–410A – for use with aluminum fan coils	36, 42
NAEB40701TX	TXV Kit, R–410A – for use with aluminum fan coils	48, 60
TSTAT0201CW	Observer Self Configuring Communication Wall Control	ALL
SYST0101CW	Ion System Wall Control	ALL
1184959	PSC motor	60
1185010	Fan	60

*Some models may be factory installed.

Copyright 2019 International Comfort Products
Lewisburg, Tennessee 37091 USA
www.GoTempstar.com
Specifications subject to change without notice.